AIRWAVE DIGITAL™

Broadcast Console

99-1000-1CU (12-input mainframe, 115 volt supply)
99-1000-1CUX (230 volt supply)

99-1000-2CU (20-input mainframe, 115 volt supply)
99-1000-2CUX (230 volt vsupply)

Operations & Technical Manual

PR&E Document 75-40

PACIFIC RESEARCH & ENGINEERING CORPORATION
2070 Las Palmas Drive • Carlsbad, CA 92009 USA • Tel: 760.438.3911 FAX: 760.438.9277 • E-Mail: info@pre.com • Internet: http://www.pre.com

AIRWAVE™ DIGITAL

Broadcast Console

99-1000-1CU (12-input mainframe, 115 volt supply)
99-1000-1CUX (12-input mainframe, 230 volt supply)

99-1000-2CU (20-input mainframe, 115 volt supply)
99-1000-2CUX (20-input mainframe, 230 volt supply)

Operations & Technical Manual

PR&E 75-40
Revision A • 3/99

The AirWave Digital Broadcast Console

Safety Instructions iii
Hazard/Warning Label Identification iv
Manual Revisions v

Chapter 1: GENERAL INFORMATION
Product Overview 1
Specifications 3
Warranty 5

Chapter 2: INSTALLATION
Mainframe Configuration 2
Connector Access 3
Power Supply 3
Grounding & Shielding 3
Installing the Backup Batteries 4
Setting the Clock 4
Cabling & Wiring 5
Wire Preparation 5
Crimp Tool Operation 6
Audio Connections 6
Unbalanced Connections 8
Logic Connections 9
Additional Logic Connections 11
Logic Quick Reference Guide ..... 13 - 16
Module Connections ..... 17 - 23

Chapter 3: OPERATION
Microphone Preamplifier Module 1
Analog or Digital Input Module 2
Telco Input/Output Module 3
Remote Line Selector Modules 5
Output Module 6
Monitor Module 7
Timer Control Module 8
Meter Panel 9

Chapter 4: EQUIPMENT DESCRIPTION
Mainframe 1
Microphone Preamp Module 1
Input Module 2
Telco Input/Output Module 3
Motherboard 4
DSP Boards 4
Output Module 5
Monitor Module 6
Remote Line Selectors 7
Timer Control Module 7
Clock/Timer Assembly 8
Bargraph Meters 8
Power Supply 9

Chapter 5: MAINTENANCE & ALIGNMENT
Parts and Repair Services 1
Spare & Replacement Parts Info 2
Module Servicing 3
Fader Servicing 4
Microphone Preamplifier Module 5
Analog Line Input Module 5
Telco Input/Output Module 5
Output Module 6
Monitor Module 6
Clock/Timer Assembly 6
Timer Control Module 7
Cue Speaker Replacement 7
Power Supply 7

Chapter 6: DRAWINGS & SCHEMATICS
Table of Contents 1
Console Wiring 2
Module Block Diagrams 3
Module Schematics 4-27
SIM Cards & Plug-in Assemblies 28-32
Clock/Timer 33-34
Bargraph Meter 35-36
Motherboard Signals 37-42
Power Supply 43-44

Chapter 7: ACCESSORIES
Button Engraving & Fader Knobs 1
Console Remote Control Panels 2
Logic Control Cables 2

Index ..... vi - vii

Safety Instructions

1. **Read All Instructions.** All safety and operating instructions must be read before operating the product.

2. **Retain All Instructions.** All safety and operating instructions must be retained for future reference.

3. **Heed All Warnings.** All warnings on the product and those listed in the operating instructions must be adhered to.

4. **Follow All Instructions.** All operating and product usage instructions must be followed.

5. **Heat.** This product must be situated away from any heat sources such as radiators, heat registers, stoves, or other products (including power amplifiers) that produce heat.

6. **Ventilation.** Slots and openings in the product are provided for ventilation. They ensure reliable operation of the product, keeping it from overheating. These openings must not be blocked nor covered during operation. This product should not be placed into a rack unless proper ventilation is provided through following the manufacturer's recommended installation procedures.

7. **Water and Moisture.** Do not use this product near water—for example; near a bath tub, wash bowl, kitchen sink or laundry tub; in a wet basement; or near a swimming pool or the like.

8. **Attachments.** Do not use any attachments not recommended by the product manufacturer as they may cause hazards.

9. **Power Sources.** This product must be operated from the type of power source indicated on the marking label and in the installation instructions. If you are not sure of the type of power supplied to your facility, consult your local power company.

10. **Grounding and Polarization.** This product is equipped with a polarized AC plug with integral safety ground pin. Do not defeat the safety ground in any manner.

11. **Power Cord Protection.** Power supply cords must be routed so that they are not likely to be walked on nor pinched by items placed upon or against them. Pay particular attention to the cords at AC wall plugs and convenience receptacles, and at the point where the cord plugs into the product.

12. **Lightning.** For added protection for this product during a lightning storm, or when it is left unattended and unused for long periods of time, unplug it from the AC wall outlet. This will prevent damage to the product due to lightning and power line surges.

13. **Overloading.** Do not overload AC wall outlets, extension cords, or integral convenience outlets as this can result in a fire or electric shock hazard.

14. **Object and Liquid Entry.** Never push objects of any kind into this product through openings as they may touch dangerous voltage points or short-out parts that could result in a fire or electric shock. Never spill liquid of any kind on the product.

15. **Accessories.** Do not place this product on an unstable cart, stand, tripod, bracket, or table. The product may fall, causing serious damage to a child or adult, and serious damage to the product. Any mounting of the product needs to follow manufacturer's installation instructions.

16. **A Product and Cart Combination** should be moved with care. Quick stops, excessive force, and uneven surfaces may cause the product and the cart combination to overturn.

17. **Servicing.** Refer all servicing to qualified servicing personnel.

18. **Damage Requiring Service.** Unplug this product from the wall AC outlet and refer servicing to qualified service personnel under the following conditions:
    a. When the AC cord or plug is damaged.
    b. If liquid has been spilled or objects have fallen into the product.
    c. If the product has been exposed to rain or water.
    d. If the product does not operate normally (following operating instructions).
    e. If the product has been dropped or damaged in any way.
    f. When the product exhibits a distinct change in performance. This indicates a need for service.

19. **Replacement Parts.** When replacement parts are required, be sure the service technician has used replacement parts specified by the manufacturer or that have the same characteristics as the original parts. Unauthorized substitutions may result in fire, electric shock, or other hazards.

20. **Safety Check.** Upon completion of any repairs to this product, ask the service technician to perform safety checks to determine that the product is in proper operating condition.

21. **Cleaning.** Do not use liquid cleaners or aerosol cleaners. Use only a damp cloth for cleaning.

Hazard / Warning Label Identification

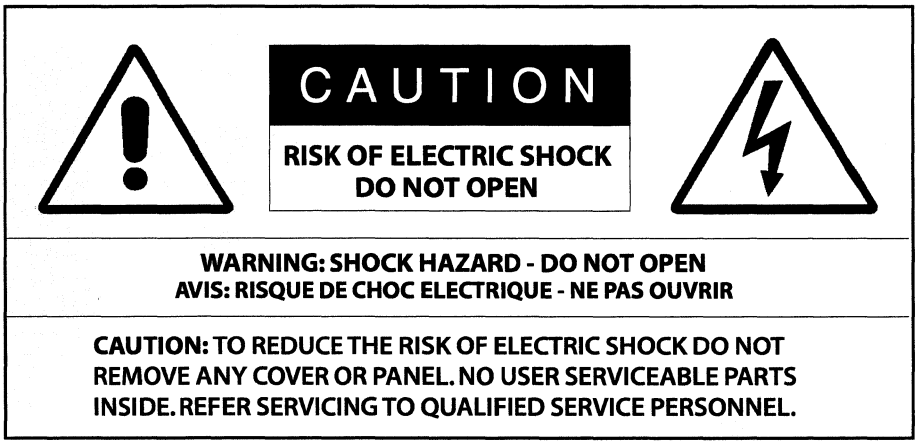

WARNING: TO REDUCE THE RISK OF FIRE OR ELECTRIC SHOCK, DO NOT EXPOSE THE POWER SUPPLY OR CONSOLE TO RAIN OR MOISTURE.

The **Exclamation Point symbol**, within an equilateral triangle, alerts the user to the presence of important operating and maintenance (servicing) instructions in product literature and instruction manuals.

The **Lightning Flash With Arrowhead symbol**, within an equilateral triangle, alerts the user to the presence of uninsulated dangerous voltage within the product's enclosure that may be of sufficient magnitude to constitute a risk of electric shock.

WARNING—This equipment generates, uses and can radiate radio frequency energy. If not installed and used in accordance with the instructions in this manual it may cause interference to radio communications. It has been tested and found to comply with the limits for a Class A computing device (pursuant to Subpart J of Part 15 FCC Rules), which are designed to provide reasonable protection against such interference when operated in a commercial environment. Operation of this equipment in a residential area is likely to cause interference, in which case the user, at his own expense, will be required to take whatever measures may be required to correct the interference.

Manual Revisions

This page provides a quick reference of the current document pages and their revision level. When a revision to this document is received from PR&E, replace the old manual pages with the new ones. Discard the old pages and post the new Manual Revisions page in place of this page.

Revision	Affected pages	Comments
A	*All pages*	*3/99 First Release*

1 General Information

Thanks for joining the growing ranks of broadcasters employing Pacific Research & Engineering (PR&E) consoles. PR&E supplies audio products and systems to the world's leading broadcast facilities. Our mission is to provide the finest quality products, systems, documentation and after-sale support. We invite comments and suggestions for improvements to this documentation and to all of our services.

AirWave Digital is a very sophisticated console with an extensive range of features contained in a compact design. To obtain maximum benefit from the console's capabilities, read the *Installation*, *Operation* and *Equipment Description* chapters prior to product installation.

PRODUCT OVERVIEW

Each Airwave Digital mainframe ships standard with one each of these modules:

- Microphone Preamp
- Monitor
- Output
- Timer Control

The modules are installed into their standard positions in the mainframe along with the Input modules ordered. Additional Mic Preamps, Analog or Digital Remote Line Selectors, and up to two Telco modules, or various accessory panels, may also be installed per the order. If required, blank panels are available to cover unused module positions.

AirWave Digital's motherboard and module area is completely contained within a welded steel chassis for strength and RFI immunity. The meter panel is hinged at the rear, locking down over the upper part of each module, covering the audio and logic connectors and the Logic Settings switches. Beneath the meter panel, the chassis bottom is open for easy cable access.

Module Descriptions

Microphone Preamplifier

Contains five preamplifiers with individual gain controls under a security cover. Phantom power (+45VDC) is selectable for each input. The preamplifier outputs are +4 dBu balanced for connection directly to an Input module or to outboard mic processing equipment. One module is supplied standard, but additional Mic Preamplifier modules can be installed into any RLS or input position.

Input

Each Input module can be configured as an analog module (with two balanced, stereo inputs), or as a digital module (with two AES-3 inputs) through a plug-in SIM (Single In-Line Module). Each Input module features two input selection (A or B), channel on/off control, fader level control (with the selectable global fader start feature), Cue and Off-Line control and output selection to

three program buses. Faceplate channel trim controls allow the analog version to accept input levels from -10 dBu to +4 dBu.

The module's inputs are electronically switched through a faceplate A/B Input selector. Logic wiring to/from external peripherals connects to a 24-pin logic connector on the faceplate. Logic and module function options for the A or the B input are set through a ten-position faceplate DIP switch. A second, optional interface connector is available for separate logic control for the A and B inputs.

Telco Input/Output

Up to two optional Telco modules can be installed into the mainframe next to the monitor module. These provide the audio and logic connections for up to two telephone hybrids and two-channel recorders. A faceplate trim control allows the module to work with hybrid outputs from -10 dBu up to +4 dBu.

Each Telco module's output (Feed to Caller) can be set manually from between the three program buses or the Off-Line mix bus. The Autofeed function automatically switches the Feed to Caller between the Off-Line mix and the assigned Program bus as the Telco module is turned off and on.

Monitor

A double-width module with the monitoring and communication controls for a control room (C/R) and separate studio or voice booth. Volume controls for C/R and studio speaker volume, C/R headphone and Cue are included with independent source selection for each room (three external inputs, Pgm-1, Pgm-2, Pgm-3 and Telco). The module includes a C/R to studio talkback system with built-in adjustable electret talkback mic. Both C/R and studio warning outputs are provided.

Output

Contains the various analog stereo line output amplifiers and the AES-3 digital outputs for the Program-1 (Pgm-1), Program-2 (Pgm-2) and Program-3 (Pgm-3) buses. A monaural analog output of the Pgm-1, Pgm-2 or Pgm-3 bus (operator-selected) is also provided. Each balanced analog output uses a nominal level of +4 dBu. Each digital output is AES-3 compatible.

This module also has faceplate buttons for the right-hand signal level meter selection, Program-2 or Program-3, with momentary Cue bus level metering. The module also has two DIP switches for selecting if Fader Start is enabled and the metering scale (VU or PPM).

Timer Control

Provides manual or automatic control over the digital timer located in the meter panel. This module also routes power to the clock/timer assembly and provides an external reset for a studio mounted timer. It also provides for a AA battery backup voltage to hold the console's logic settings in case of momentary power outage.

Remote Line Selector (RLS)

Two line selectors are available: an analog RLS and a digital RLS. Each is a 7x2 input selector. The analog version uses balanced, line-level mono or stereo signals. The digital version uses AES-3-compatible digital signals. Two banks of seven switches provide manual, exclusive source selection, among the seven common external input signals for the two outputs.

Power Supply

The separately packaged rack mount power supply is fully regulated and protected by internal fuses and electronic safeguards against excessive current.

The power supply has five regulated output voltages. Two outputs (±16 volts) power the analog audio circuitry. A third (+5 volts) powers the DSP and logic control circuitry. The remaining outputs power the clock/timer assembly (+12 volts) and supplies phantom powering (+45 volts) for condenser microphones connected to the Microphone Preamplifier module.

SPECIFICATIONS

AirWave Digital's specifications are significantly more complete, and the related test conditions more defined, than those usually shown for consoles in this class. Be sure to follow the test conditions and measure in the units as stated.

The specifications are for a fully-loaded AirWave Digital-20 mainframe.

Test Conditions:

Specifications are for the basic signal paths, per channel, with 600 ohm loads connected to the analog program outputs.

0 dBu corresponds to an amplitude of 0.775 volts RMS regardless of the circuit impedance. This is equivalent to 0 dBm measured into a 600 ohm circuit for convenient level measurement with meters calibrated for 600 ohm circuits.

Noise specifications are based upon a 22 kHz measurement bandwidth. The use of a meter with 30 kHz bandwidth will result in a noise measurement increase of approximately 1.7 dB.

Total Harmonic Distortion (THD) is measured at a +23.5 dBu output level using a swept signal with a 22 kHz low pass filter.

FSD = Full Scale Digital, +24 dBu

Microphone Preamplifiers

Source Impedance: 150 ohms
Input Impedance: 5 k ohms minimum, balanced
Input Level Range: Adjustable, -70 to -30 dBu
Input Headroom: >20 dB above nominal input
Output Source Impedance: 220 ohms balanced
Nominal Output Level: +4 dBu, balanced
Output Load Impedance: 2.5 k ohms minimum

Analog Line Inputs

Source Impedance: 600 ohms or less
Input Impedance: >40 k ohms, balanced
Input Level Range: Adjustable, -10 to +4 dBu
Input Headroom: 20 dB above nominal input

Analog Main Outputs

Output Source Impedance: 80 ohms balanced
Output Load Impedance: 600 ohms minimum
Nominal Output Levels:
Program/Monaural Outputs: adj. +4 dBu
Telephone Mix-Minus: set at +4 dBu
Telephone Recorder Mix Feed: +4 dBu
Maximum Output Levels:
Program and Monaural: +24 dBu
Telco Mix-Minus: +24 dBu
Telco Recorder Mix Feed: +24 dBu

Digital Inputs & Outputs

Reference Level: +4 dBu (-20 dB FSD)
Digital I/O: Thru digital Input or RLS modules and the digital program outputs.
Signal Format: AES-3, S/PDIF (input only)
AES-3 Input Compliance: 24-bit
AES-3 Output Compliance: 24-bit
Digital Reference Frequency: Internal crystal
Internal Sample Rate: 48 kHz
Processing Resolution: 24-bit fixed with extended precision accumulators
Conversions: A/D 18-bit Delta-Sigma, 128x Sample rate conversion on all digital inputs; D/A 24-bit, using 1-bit conversion
Latency: <1 ms, Mic in to Monitor out; <300 µs digital input to digital output

Monitor Outputs

Output Source Impedance: 400 ohms, balanced
Output Load Impedance: 2.5 k ohms or greater
Output Level: +4 dBu nominal, +24 dBu max.
Console Headphone Output: 0 dBu, >8 ohm load
External Headphone Amplifier Output:
Source Impedance: 400 ohms
Load Impedance: 2.5 k ohms or greater
Output Level: +4 dBu nominal, +22 dBu max.

Frequency Response

Microphone or Line Input to Program Output:
+0 dB/-0.5 dB, 20 Hz to 20 kHz
Telco Input to Program Output:
+0 dB/-2.0 dB, 20 Hz to 20 kHz

Dynamic Range

Analog Input to Analog Output:
89 dB ref. to FSD, 91 dB "A" weighted to FSD
Digital Input to Analog Output:
92 dB ref. to FSD, 95 dB "A" weighted to FSD

Equivalent Input Noise

Microphone Preamp: -127 dBu, 150 ohm source

Total Harmonic Distortion + Noise

Mic Pre Input to Mic Pre Output: <0.005%, 20 Hz to 20 kHz, -38 dBu input, +18 dBu output, 100 k ohm load, 22 kHz filter bandwidth.
Analog Input to Analog Output: <0.02% at 1kHz, +18 dBu input, +18 dBu output, 600 ohm load, 22 kHz filter bandwidth.
<0.05%, 20 Hz to 20 kHz, +18 dBu input, +18 dBu output, 600 ohm load, 22 kHz filter bandwidth.
Digital Input to Digital Output: <0.0016%, 20 Hz to 20 kHz, +18 dBu input, +18 dBu output, 20 kHz filter bandwidth
Digital Input to Analog Output: <0.005% at 1 kHz, +18 dBu input, +18 dBu output, 600 ohm load, 22 kHz filter bandwidth.
<0.05%, 20 Hz to 20 kHz, +18 dBu input, +18 dBu output, 600 ohm load, 22 kHz filter.

Crosstalk Isolation

Program-to-Program: >90 dB, 20 Hz - 20 kHz
A Input to B Input: >83 dB, 20 Hz - 20 kHz
B Input to A Input: >86 dB, 20 Hz - 20 kHz

Stereo Separation

Analog Program Outputs: >87 dB @ 1 kHz, >78 dB, 20 Hz to 20 kHz

Console Power Requirements

Fully configured AirWave Digital-12: 120 watts at 115VAC, ±8%, 50/60 Hz
Fully configured AirWave Digital-20: 170 watts at 115VAC, ±8%, 50/60 Hz
Power Supply Main fuse rating: 1.25 amp at 230 VAC (IEC), 2.25 amps at 115VAC (UL)

Power Supply Voltages

Phantom power: +45VDC at 0.100 Amp
Audio power: ±16VDC at 1.00 Amp (each leg)
Digital & Logic power: +5VDC at 6.5 Amps and +12VDC at 4.0 Amps

Power Supply Ground

Chassis grounded through AC cord.
DC voltages floating from chassis.

Power Supply Connection

AC input: IEC power cord
DC output: Keyed multi-pin connector

Pacific Research & Engineering Corporation reserves the right to change specifications without notice or obligation.

WARRANTY

The AirWave Digital console carries a manufacturer's warranty which is subject to the following guidelines and limitations:

A) Except as expressly excluded herein, Pacific Research & Engineering Corporation ("Seller") warrants equipment of its own manufacture against faulty workmanship or the use of defective materials for a period of one (1) year from date of shipment to Buyer. The liability of the Seller under this Warranty is limited to replacing, repairing or issuing credit (at the Seller's discretion) for any equipment, provided that Seller is promptly notified in writing within five (5) days upon discovery of such defects by Buyer, and Seller's examination of such equipment shall disclose to its satisfaction that such defects existed at the time shipment was originally made by Seller, and Buyer returns the defective equipment to Seller's place of business in Carlsbad, California, packaging and transportation prepaid, with return packaging and transport guaranteed.

B) Equipment furnished by Seller, but manufactured by another, shall be warranted only to the extent provided by the other manufacturer.

C) Thermal filament devices (such as lamps and fuses) are expressly excluded from this warranty.

D) The warranty period on equipment or parts repaired or replaced under warranty shall expire upon the expiration date of the original warranty.

E) This Warranty is void for equipment which has been subject to abuse, improper installation, improper operation, improper or omitted maintenance, alteration, accident, negligence (in use, storage, transportation or handling), operation not in accordance with Seller's operation and service instructions, or operation outside of the environmental conditions specified by Seller.

F) This Warranty is the only warranty made by Seller, and is in lieu of all other warranties, including merchantability and fitness for a particular purpose, whether expressed or implied, except as to title and to the expressed specifications contained in this manual. Seller's sole liability for any equipment failure or any breach of this Warranty is as set forth in subparagraph A) above; Seller shall not be liable or responsible for any business loss or interruption, or other consequential damages of any nature whatsoever, resulting from any equipment failure or breach of this warranty.

Installation

2

The AirWave Digital mainframe can sit on top of, or be recessed into, the studio furniture countertop. A minimum of two inches of rear clearance and 13½ (343.0 mm) inches of vertical clearance above the countertop is required to fully open the meter panel to its service position.

The AirWave Digital console shipment consists of:

- The 12- or 20-input mainframe with the standard modules installed: Monitor, Timer Control, Output and Microphone Preamp.
- Also installed are the Input, RLS and Telco modules, accessory panels and blank panels that were ordered with the mainframe.
- The rack-mount power supply.
- The AirWave Tool kit (AA batteries, AMP MOD IV Crimp and contact removal tools, hex driver, pot knob removal tool and clock set magnet tool).
- Audio and Logic connector kits for the mainframe and for each module ordered. The kits contain all the AMP MOD IV connector housings and receptacle contacts needed for installation.

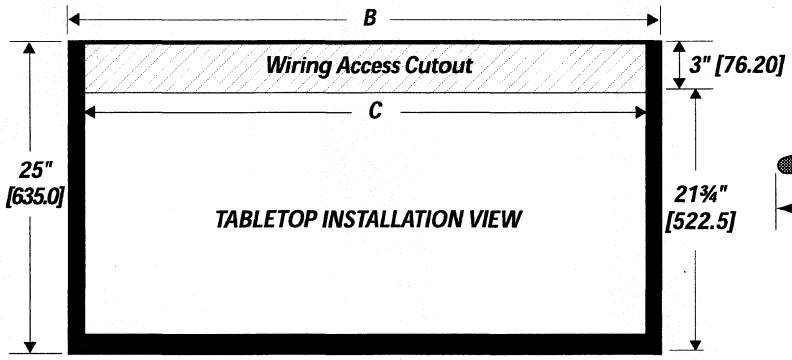

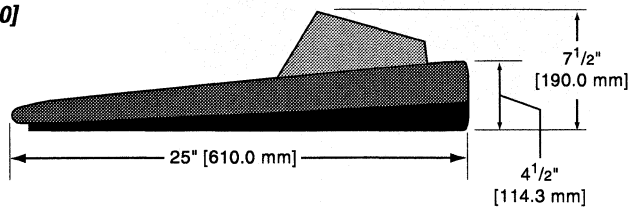

CONSOLE SIDE VIEW, with dimensions

Dimension Table

Mainframe	A	B	C
AirWave-12	*32" [812.8]*	*33" [838.2]*	*28½" [723.9]*
AirWave-20	*44" [1117.6]*	*45" [1143]*	*40½" [1028.7]*

Millimeter dimensions in brackets. All dimensional tolerances are +¼" [6.350], -0" [0.0]. Typical front setback is 12" [304.8]. Allow 2" [50.80] clearance behind mainframe and 13½" [342.9] clearance above the meter panel.

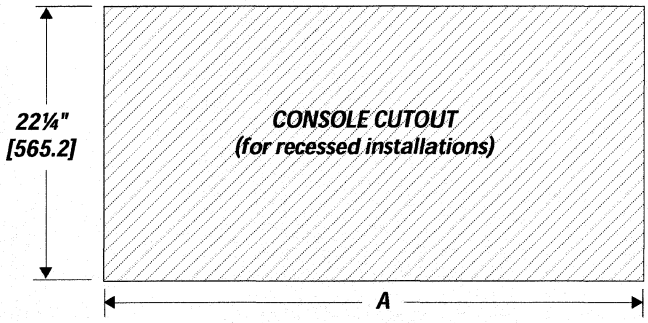

To simplify console installation, logic cable wiring diagrams for specific peripheral equipment are available from PR&E. Custom engraving for the button caps and colored fader knobs are also available. See Chapter 7, *Accessories*, for details.

INSTALLATION NOTE: Do not locate the console near intense electromagnetic hum fields, such as those produced by large power transformers and by audio amplifiers which use inexpensive power transformers operating in or near saturation. Strong electromagnetic fields may impair the performance of AirWave Digital and neighboring equipment. Audio cables must also be routed to achieve maximum practical distance from all AC power mains wiring.

MAINFRAME CONFIGURATION

AirWave Digital continues PR&E's design philosophy of positioning the input modules in the physical center of the mainframe. This gives the operator equal reach to peripheral equipment located to the sides of the console.

Module Placement

The 12 (or 20) Input module positions can have any combination or order of Input modules, Mic Preamps, Remote Line Selectors (RLS) or custom remote panels installed. The remaining console positions are fixed. The Timer Control, Mic Preamp, Monitor, Output and the two optional Telco modules must be positioned as shown in the illustration. However, the two Telco positions may alternately have Input modules installed in them. The RLS position, between the Monitor and Output modules, can only be used for either an RLS or a Mic Preamp.

The Meter Panel

Two Bargraph meters provide level monitoring for Pgm-1 and either Pgm-2 or Pgm-3 with momentary Cue bus selection. The meter scale (VU or PPM) is set via DIP switch on the Output module. The cue/talkback speaker, a clock and event timer are also on the panel.

AirWave Digital-12 Module Configuration

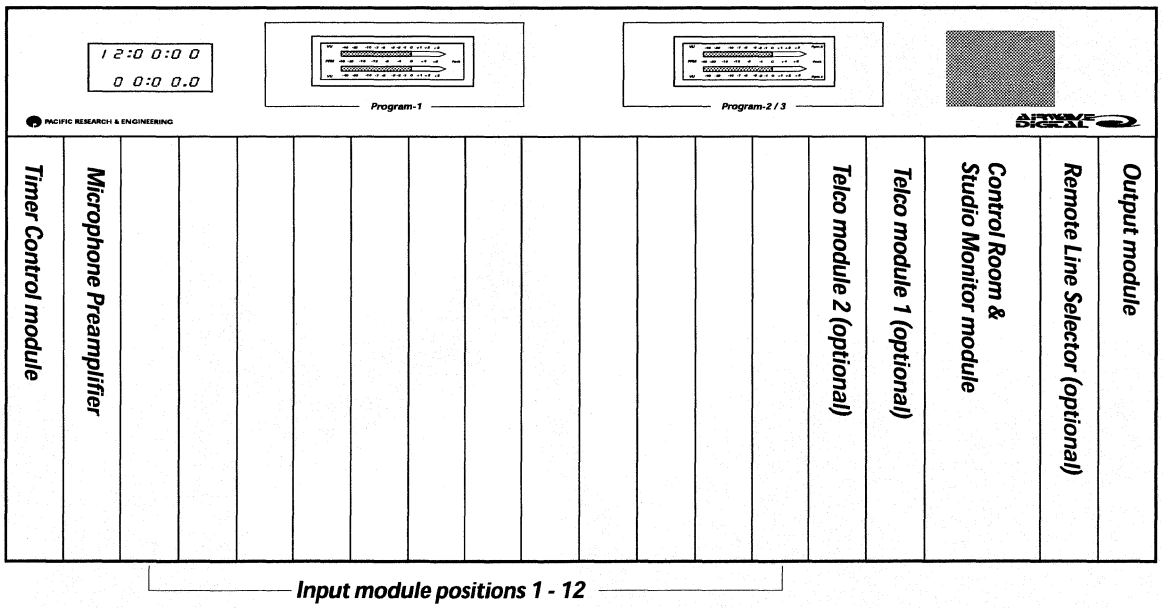

Note: *The AirWave Digital-20 mainframe has eight additional Input module positions.*

CONNECTOR ACCESS

The meter panel is set into its service position to access the module connectors. To move the meter panel to its service position, simultaneously press on the latch buttons, located on the ends of the meter panel, while lifting and rotating the panel rearward.

Note: When opened to its service position, exercise caution to ensure the panel does not accidentally fall closed.

To ease initial wiring, the meter panel can be completely removed from the mainframe chassis. Set the panel to its service position and unplug all meter panel cabling to the speaker, meters and clock/timer. With another person holding the meter panel unlatch the two hinges, by moving the two release pins into their detent positions, to free the meter panel. To reinstall the meter panel, first align the hinge parts together and then release the pins out of their detents.

POWER SUPPLY

The power supply is typically rack mounted in the console cabinetry below and to the left or right of the supporting countertop. The power supply must be installed so that the ten-foot DC power cable, that is fastened to the right end of the mainframe motherboard, is not under tension.

DC GROUNDING NOTE: The DC outputs of the power supply are not referenced to the power supply chassis and, therefore, are floating from the AC safety ground. *Do Not Connect* audio or logic supply ground wiring to the chassis of the power supply.

AC GROUNDING NOTE: Do not defeat the safety ground in any way. Doing so may provide a potentially dangerous condition to the operator.

Refer to the *AirWave Universal Power Supply Technical Manual* (PR&E # 75-41) for complete power supply installation details.

GROUNDING & SHIELDING

The broadcast facility's *technical ground* should only connect to the mainframe chassis ground stud. The stud is located next to the DC power supply cable entry point into the chassis. Terminate the facility's technical ground wire in a crimped lug.

Connect the audio shields at both the console and the peripheral when all system components share a common ground potential and are using isolated ground AC outlets tied individually back to the main technical ground.

If isolated ground AC outlets are not available, connect the cable shields at the console end only. The shields should be floated (left unconnected) at the peripheral device. Ensure the peripheral devices connect to a clean ground through their power cords, or through separate ground wires to the facility's technical ground.

POWER SUPPLY GROUNDING NOTE: The power supply chassis is connected to the safety or "U" ground wire in the AC mains supply cable. Audio signals are not referenced to this ground in any way by the console.

AUDIO GROUND NOISES: Buzz pickup is generally electrostatic—such as capacitive coupling between an audio line and a power line. Do not route audio lines in the same wireway as an AC power line.

INSTALLING BACKUP BATTERIES

Two AA batteries are supplied in the Installation Tool Kit. They supply a "Keep Alive" voltage that holds each module's logic state during momentary power outages. They mount in battery clips on the Timer Control module circuit board. Observe the correct polarity (marked on the circuit board) when installing the batteries.

Note: Replace batteries yearly to ensure continuous backup protection. Remove one or both batteries to prolong battery life when the console will be unpowered for an extended period.

SETTING THE CLOCK

The digital time-of-day clock can be a master or a slave. In master mode, the factory preset, clock timing is derived from a temperature-controlled quartz crystal oscillator. In slave mode, clock timing is derived from a TC76/TC89-compatible ESE master clock reference signal.

Master clocks are available from:
ESE
142 Sierra St.
El Segundo, CA 90245.
Telephone: 310.322.2136
www.ese-web.com

The operating mode is set by switch S1, #1 on the clock/timer circuit board. To access the clock/timer board, open the meter panel to its service position. The clock/timer board is mounted behind the clock/timer display on the meter panel.

With the clock set to master mode, it's necessary to manually set the clock once power is applied to the console. Three magnetically-activated Hall-effect sensors are used to adjust or hold the time. They are positioned below and between each pair of 7-segment displays, just behind the display face. Clock set magnet tool (PR&E # 90-151) is used to activate the Hall-effect sensors.

Clock/Timer Option Switches

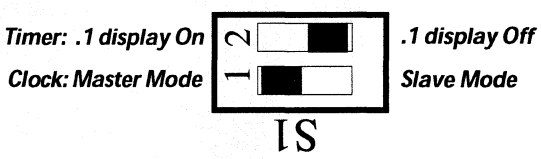

Switch S1, on the Clock/Timer printed circuit board, as viewed with the meter panel in its service position. Factory default settings shown.

Setting the Clock

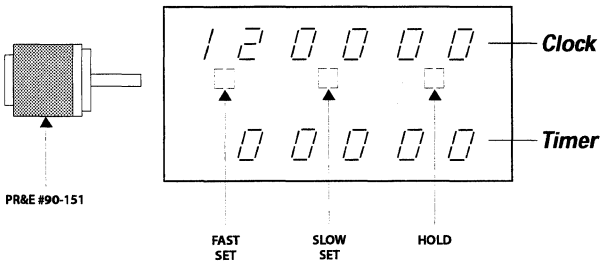

Note: The plastic clock/timer bezel may be scratched if the tool is moved while in contact with the lens.

To set the time, place the end of the magnet tool directly against the plastic face over the appropriate sensor. Use *Fast Set* to quickly advance the time and *Slow Set* to slowly advance the time. To synchronize the clock display to real time, set the clock a few seconds ahead and use *Hold* to freeze the display. To start the clock, move the tool away from *Hold*.

When an ESE time code signal is connected to BNC connector, J3, on the clock/timer circuit board, and slave mode is selected (S1, #1, is set to the right), the clock does not need to be set. Should the ESE time code signal fail, the clock automatically defaults to its internal crystal reference oscillator, blinking an LED below the clock display to indicate the loss of time code.

Timer Display

The Event Timer displays time in minutes, seconds and tenths of seconds. The tenths of seconds display is normally turned off while the timer runs. It can be turned on while running by moving clock/

timer circuit board switch S1, #2, to the left. The tenths of seconds are always displayed while the timer is in the Stop or Hold modes, regardless of the setting of switch S1, #2.

Cabling & Wiring

Before beginning the installation, draw a facility wiring plan listing the console interconnections with peripheral devices. Identify and create tags for all audio and logic cabling. List each connection in a master facility wiring logbook to facilitate wiring installation, future system wiring changes, equipment updates and system troubleshooting. Refer to *Module Connections*, pages 17 through 23 later in this chapter, for the audio and logic connector pin-out definitions.

Analog audio connections require two-conductor stranded, insulated, foil-shield cable containing a separate shield drain wire (equivalent to Belden 8451, 9451 or 8761).

AES/EBU connections require 110 ohm two-conductor stranded, insulated, foil-shield cable containing a separate shield drain wire (equivalent to Belden 1800A).

Logic control cables require stranded, 22 AWG, multiple conductor, non-shielded, jacketed cable (equivalent to Belden 9423, 8457 or 9421). The number of conductors needed is determined by the application. Typically five and eight wire cables are most often used for constructing logic cables (there are only 18 distinct signals on the Logic Interface connector, of which only a handful may actually be used for any given application).

WIRE PREPARATION

All AirWave Digital audio and logic wiring terminates in AMP MOD IV receptacle contacts at the console. Stranded wire of 22 to 26 AWG, with insulation diameters of .040 to .060 inch, can be used with the AMP MOD IV receptacle contacts.

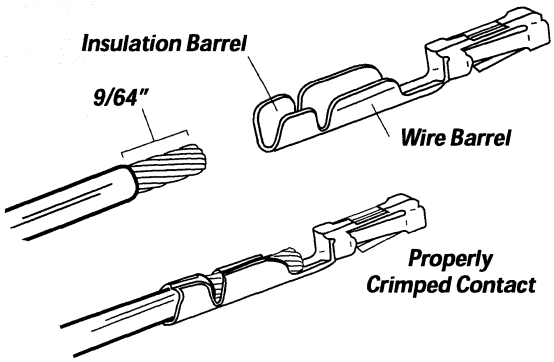

AMP MOD IV Receptacle Contacts

Follow these steps for audio wire preparation:

1. Strip the cable insulation jacket and foil shield back 1½" [38.10 mm].
2. Remove the foil shield and sleeve the drain wire with 20 AWG Teflon sleeving, leaving 9/64" [3.572 mm] of the drain wire exposed.
3. Cover the cut end of the jacket with 3/4' [19.05 mm] of heat-shrink tubing, centered on the cut. Shrink this tubing to hold the drain wire sleeving in place.
4. Strip the signal wire insulation back 9/64" [3.572 mm].
5. Crimp the receptacle contacts onto the wire and insulation.

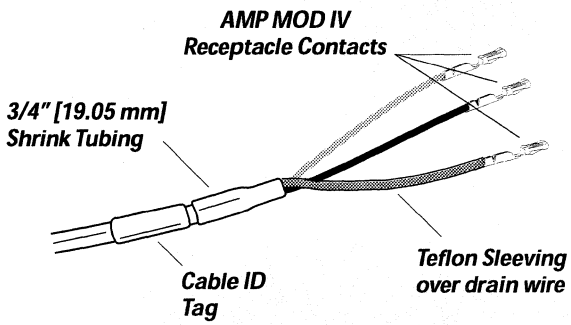

Audio Wire Preparation

Audio Cable Shield Note: To ensure your installation follows recommended grounding procedures, you must sleeve all drain wires with Teflon sleeving and put heat shrink tubing over all cable jacket cut ends to insulate the shield wire.

Logic control cables are fabricated in a similar manner to the audio wiring. Strip the jacket insulation back 1½" [38.10 mm], sleeve the cut end with 3/4" [19.05 mm] of shrink tubing and strip the insulation from each wire 9/64" [3.572 mm].

CRIMP TOOL OPERATION

A ratcheting AMP MOD IV hand crimper is included in the tool kit. The tool crimps both the insulation and wire barrels on the AMP MOD IV receptacle contacts in one crimp action.

AMP MOD IV Crimp Tool

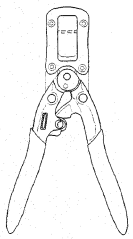

Follow these instructions for using the ratcheting crimp tool:

1. Hold the crimp tool with the printed side up. Insert the contact from the opposite side, with the barrel openings up, until the insulation barrel end is flush to the opening of the die. Close the tool only until the anvil holds the contact in place. Refer to the cutaway view.
2. Insert the stripped wire into the contact until it hits the tool's wire stop. Hold the wire in place while squeezing the tool handles to crimp the contact onto the wire. The tool handles automatically release and spring open after the crimp cycle is complete.

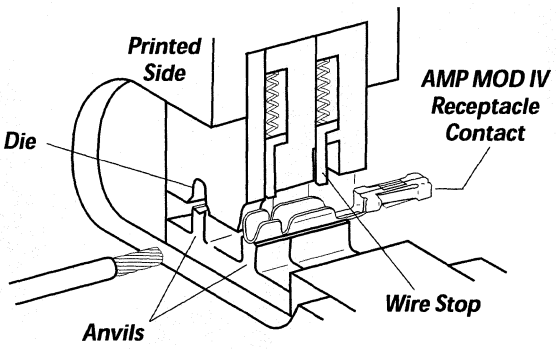

Enlargement Of Crimper
(cutaway view)

A properly crimped contact receptacle is inserted and locked into the appropriate connector housing following the pin-out diagrams found in the *Module Connections* section (pages 17 to 23). Note that the receptacle contact must be inserted with its locking tab side facing the locking tab slots on the side of the connector housing. A light "click" will be felt as the contact's locking tab engages the locking tab slot.

Receptacle Contact Insertion & Removal

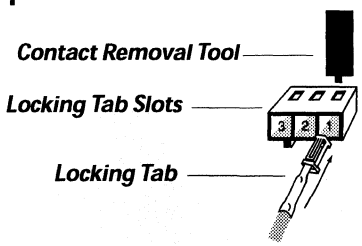

A Contact Removal Tool (PR&E 70-129) is used to depress the locking tab if the contact and wire need to be pulled out of the connector.

AUDIO CONNECTIONS

Audio connector pin assignments take visual advantage of the three-pins-per-row design of the three-pin and six-pin AMP MOD IV connectors for both analog and digital connections.

Audio Connector Pin Numbering

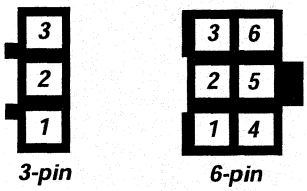

Pin numbering shown from the wire entry end, oriented from the board operator's perspective.

When plugged into a module, the audio shields are the pins closest to the console operator, the audio low wires are the middle pins and the audio high wires are the back pins. For stereo, the left channel wires connect to the left column of pins and the right channel wires to the right-hand column of pins (all from the operator's perspective).

Microphone Inputs

Pin	Signal Description
1	*Shield (connects directly to the chassis)*
2	*Low (- input)*
3	*High (+ input)*

Two-Channel Line Inputs and Outputs

Pin	Signal Description
1	*Shield for left channel or signal 1*
2	*Low (- input), left channel or signal 1*
3	*High (+ input), left channel or signal 1*
4	*Shield for right channel or signal 2*
5	*Low (- input), right channel or signal 2*
6	*High (+ input), right channel or signal 2*

Analog Connections

There are no analog interstage patch points within the AirWave Digital input or output modules. To use a patch bay, connect the line level outputs from the peripheral devices directly to the patch bay and then normal these to the appropriate analog Input modules. Likewise, AirWave Digital's analog outputs may also be routed through a patch bay normalled to standard peripherals such as analog On-Air processing gear, recorders, telephone hybrids, etc.

The Microphone Preamplifier module's line-level outputs (+4 dBu, nominal, balanced) can also be routed through a patch bay normalled to an Input module. If mic processing is required, the Preamplifier module's outputs may be routed through line-level mic processing equipment and then to an Input module. When mic-level input capable processors are used, the microphone should be connected to the mic processor with the processor's line-level output directly connected to an Input module.

Digital Connections

Digital outputs use three-pin connectors wired like the Mic Inputs. These connections output AES-3 compatible signals (often referred to as AES/EBU signals).

Note: The outputs cannot be directly connected to a S/PDIF input. A signal translation interface must be used to do this.

AES/EBU Digital Outputs

Pin	Signal Description
1	*Shield (connects directly to the chassis)*
2	*Low (- input)*
3	*High (+ input)*

Because Input and RLS modules are available with either an analog or a digital input, the connectors on these modules use six-pin AMP MOD IV connectors even when the module is configured for digital signals. Connect the AES/EBU signal to pins 1, 2 and 3 only. There is no connection on pins 4, 5 and 6.

AES/EBU Digital Inputs

Pin	Signal Description
1	*Shield for AES/EBU signal*
2	*Low (- input)*
3	*High (+ input)*
4	*no connection*
5	*no connection*
6	*no connection*

Routing digital audio signals through a patch bay is not recommended.

UNBALANCED CONNECTIONS

Even though all analog inputs and outputs are active and balanced, unbalanced consumer or "semipro" equipment can be connected. For best results unbalanced devices should connect to the console through an IHF-PRO match box.

If a match box is not available, connect unbalanced signals per the following illustration. Keep unbalanced cable lengths as short as possible.

Connecting an Unbalanced Device to an AirWave Analog Input

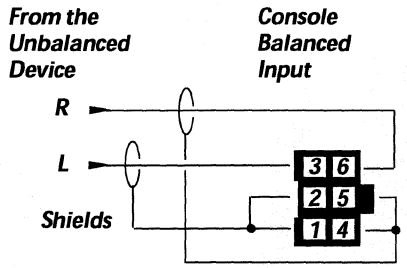

When an unbalanced device must be connected to an AirWave analog balanced output, and an IHF-PRO match box is not available, do not tie the low (-) and shield pins together to "unbalance" the signal. The low pin must always be left "floating," as shown in the following illustration, when unbalancing an AirWave output.

Connecting an Unbalanced Device to an AirWave Analog Output

(Nominal Output is -2 dBu)

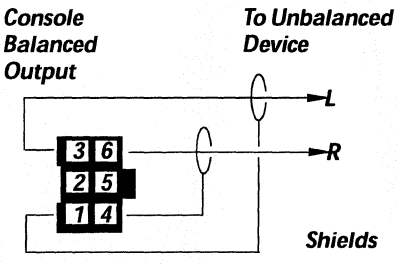

(Make no connections to pins 2 & 5)

S/PDIF Signals

When a S/PDIF digital output is connected to an AirWave digital input, a 249 ohm resistor is used to properly load the 75 ohm S/PDIF cable. Install the resistor onto the connector following the diagram. Alternately, an unbalanced-to-balanced line transformer may be used to connect a S/PDIF signal to an AES/EBU input.

Connecting an S/PDIF Device to an AirWave AES/EBU Input

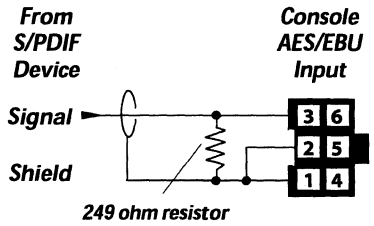

Note 1: AES/EBU output signals cannot connect directly to S/PDIF inputs, a signal conversion interface must be used.

Note 2: Some S/PDIF outputs may not work with the AirWave's digital inputs, even with the additional load resistor, due to nonstandard signal levels or protocols in the S/PDIF product.

LOGIC CONNECTIONS

Each Input module comes standard with one 24-pin logic connector to control a device connected to either the A or B input. The optional 99-1003 Dual Logic Interface plug-in can be added to any Input module to provide a separate logic connection for each input.

When a peripheral device is connected, one of the main functions of the logic interface is to start the peripheral at module on. The peripheral device logic can, in turn, control the Input module; turning the module audio off at the end of an event and then controlling the Off lamp illumination to indicate the peripheral device status.

When a Guest Panel is connected, its remote On, Off, Cough and Talkback buttons control the module while the logic control outputs from the module control the button tallies in the Guest Panel.

THE LOGIC INTERFACE

A simplified schematic for the Input module interface is shown below. The dual logic plug-in is identical. Logic outputs (shown on the right) are isolated from peripheral devices by five solid-state devices functioning like single-pole mechanical relays. The "relay contacts" can switch external voltages of up to 60 volts at 350 mA.

Each press of the On button generates a 220 ms pulse from the Start Pulse relay. Each press of the Off button generates a 220 ms pulse from the Stop Pulse relay. These two relays are commoned together at Command Common. The other three relays, Logic Active Tally, On Tally and Off Tally, are also "commoned" together at the Tally Common output.

The six logic inputs (on the left side of the illustration) are opto-isolated and current limited so any logic voltage from +5 to +40VDC can be used.

Simplified Schematic, Input Module Logic Interface

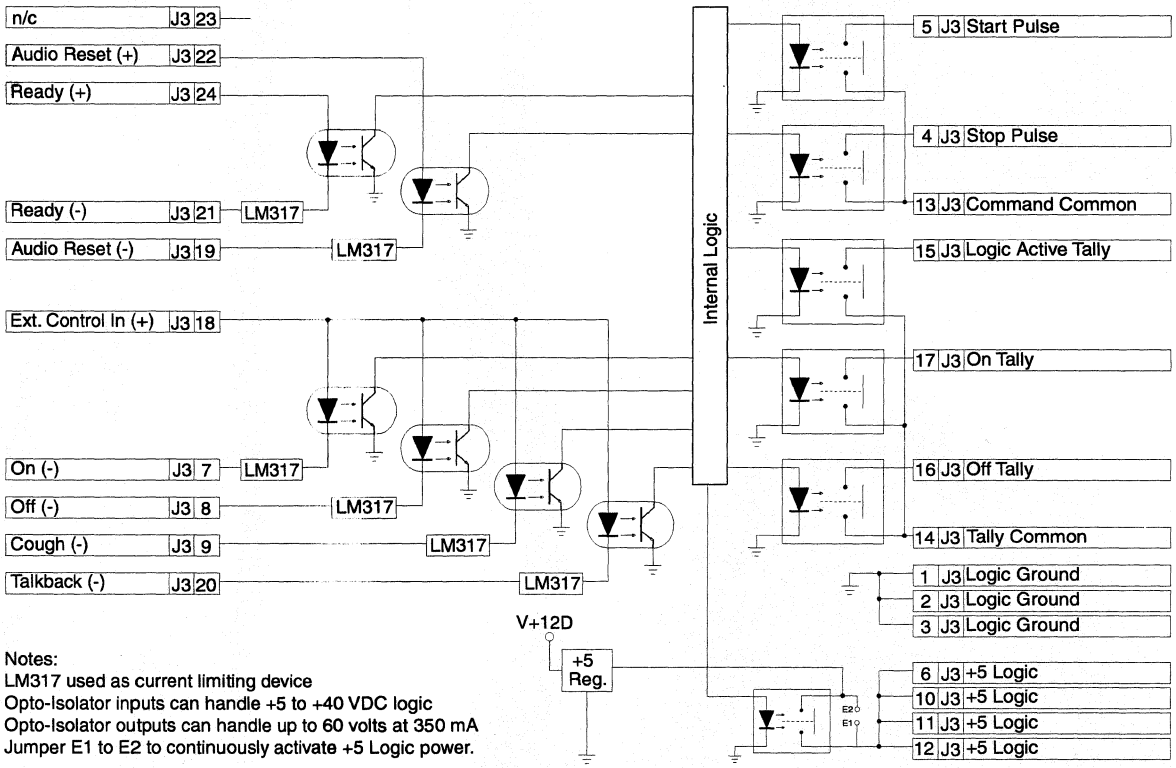

Notes:
LM317 used as current limiting device
Opto-Isolator inputs can handle +5 to +40 VDC logic
Opto-Isolator outputs can handle up to 60 volts at 350 mA
Jumper E1 to E2 to continuously activate +5 Logic power.

The On, Off, Cough and Talkback inputs allow remote mic panel switches to control the Input module through active low logic signals (pull to ground). To enable these inputs jumper the External Control In (+) connection to +5 Logic.

The Audio Reset and Ready inputs can use either active low logic (pull to ground) or active high logic (pull to +VDC) from peripheral devices. With active high logic, Ready (-) and Audio Reset (-) are tied to logic ground on the peripheral device. Ready (+) and Audio Reset (+) then connect to the appropriate logic outputs on the peripheral device.

When active low logic is used by the peripheral device, Ready (+) and Audio Reset (+) connect to the logic supply voltage on the peripheral device, and Ready (-) and Audio Reset (-) connect to the appropriate logic outputs.

In normal operation the +5 Logic supply is turned off when the interface is not enabled for the input selected. Circuit board pads E1 and E2 can be jumpered to supply +5 Logic voltage at all times for special applications.

AirWave Digital Quick Logic Guides

Pages 13 through 16 offer quick guides to configuring the console logic. Page 13 contains an AirWave Digital Logic Interface Glossary, Logic Settings switch definitions and a copy of the simplified logic schematic from the previous page. Pages 14, 15 and 16 show connection diagrams for a Guest Panel (remote mic panel), a CD player and a digital delivery system, respectively.

Note: To completely isolate the console from a peripheral device, use only the control input and output connections. These are decoupled from the console's ground and power supply through opto-isolator devices.

The Logic Ground and +5 Logic connections are referenced to the console's logic power supply and ground. Connect these only to a peripheral device with isolated logic connections or to a Guest Panel. Connecting these to a non-isolated peripheral device can result in a ground loop between the console and the peripheral.

Input Module Logic and Microphones

The two main functions of microphone logic are to automatically mute the monitor speakers in the room with the "hot" mic and to command the appropriate hot mic warning light.

The warning commands come from the Monitor module, but it is the first four Logic Settings switches on each Input module that tell the monitor module whether the A and/or B input is a control room or a studio microphone.

Page 14 summarizes setting up an Input module as a microphone input. To activate the Guest Panel logic functions, turn on Logic Settings switch 7 and set switch 8 for the appropriate A or B input. To enable the remote control inputs (On, Off, Cough, Talkback), jumper External Control In (+) to +5 Logic on the logic connector.

Guest Panel, Simplified Schematic for 99-949-1 or -2

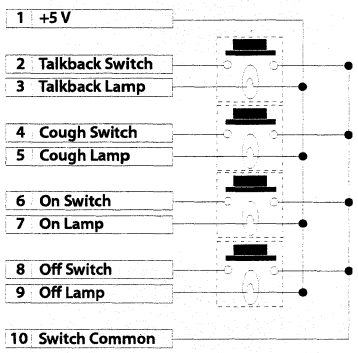

Momentary SPST switches are used to construct a remote mic control panel like that shown above. Connect one side of each control panel switch to the appropriate logic connector pin. Common the other side of each switch (Switch Common on the control panel illustration) to Logic Ground.

The Logic Active Tally output controls the lamps for the Cough and Talkback switches. The On Tally and Off Tally outputs control the On and Off switch lamps. The other side of each lamp (+5 V) connects to +5 Logic. Use 6.3 volt lamps, with less than 50 mA current draw, for all remote panels supplied by the console.

Input Module Logic and Peripheral Devices

Peripheral devices are controlled through the Start, Stop and Command Common logic outputs.

In the connection example on page 15, active low logic is used, thus Command Common is connected to the logic ground on the peripheral device (labeled command common by Denon).

In the example on page 16, active high logic is required, thus Command Common is connected to +5 Logic. Note that this voltage is more typically supplied directly by the peripheral device to prevent ground loops.

Peripheral devices control the module through the Audio Reset and Ready logic inputs. On page 15, only the Ready function is shown being used. Ready performs an Audio Reset, to turn off the module without generating a Stop Pulse, in addition to then controlling the Off lamp illumination.

On page 16, Audio Reset (+) and Ready (+) connect to +5 Logic on the module. The Ready (-) command and the Audio Reset (-) command are pulled low by the active low logic relay outputs on the peripheral device, which all tie to the module's Logic Ground (pin 1).

For peripheral devices that require a steady On or Off signal, the On and Off tallies can be used. When the Off Tally is used in this manner, Logic Settings switch #9 (Lamp Bypass) must be set to the left (On) so that the Off lamp is not controlled by the Ready logic.

ADDITIONAL LOGIC CONNECTIONS

There are three additional AirWave Digital logic connections on the Monitor module, Telco module and the Timer Control module.

An 8-pin connector on the Monitor module carries the logic control outputs for the Control Room and Studio warning light interfaces. The Monitor module logic connection and block diagram are on the next page.

The Telco module includes a 3-pin connector for a Start and a Stop Pulse output for triggering a hybrid or other remote device at module on and off.

A 3-pin connector on the Timer Control module carries the remote timer reset logic. The Timer Control module logic connection and description are in the *Timer Module Remote Connection* section on page 23.

Monitor Module Logic

There is one 8-pin logic connector for the "hot mic" logic command outputs for the Control Room and Studio on-air warning lamp systems.

Each logic command output is isolated using a solid-state relay with a pair of normally open "dry-contacts." These *relay contacts* can switch external voltages of up to 60 volts at 350 mA for direct interface to most lamp control devices.

If an external five volt lamp relay is used, one side of the interface relay can be jumpered to +5 Volts (pins 2 and 6) or to Logic Ground (pins 1 and 5) to create an active high or active low output, respectively.

The simplified schematic on the next page shows the logic outputs for the Control Room and Studio warning lamp interface externally jumpered to yield an active high output from the relay.

When an active low logic output is needed on the Control Room, jumper pins 1 and 3 together and use pin 4 as the Control Room warning output. Jumper pins 5 and 7 together and use pin 8

when the Studio warning output requires an active low logic output.

Note: Jumpering the solid-state relay to either +5 Volts or Logic Ground defeats ground isolation between the console and the warning lamp interface.

Warning Lamp Connector Pin Definitions

8-pin connector

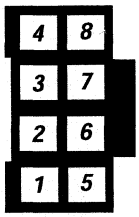

(wire insertion end view)

PIN	*SIGNAL*	*FUNCTION*
1	Logic Ground	Console logic ground
2	+5 Logic	+5 volt supply
3	C/R Relay	Control Room Warning Lamp Interface "N/O relay contact"
4	C/R Relay	Control Room Warning Lamp Interface "C relay contact"
5	Logic Ground	Console logic ground
6	+5 Logic	+5 volt supply
7	Studio Relay	Studio Warning Lamp Interface "N/O relay contact"
8	Studio Relay	Studio Warning Lamp Interface "C relay contact"

Simplified Schematic for the Warning Lamp Interface

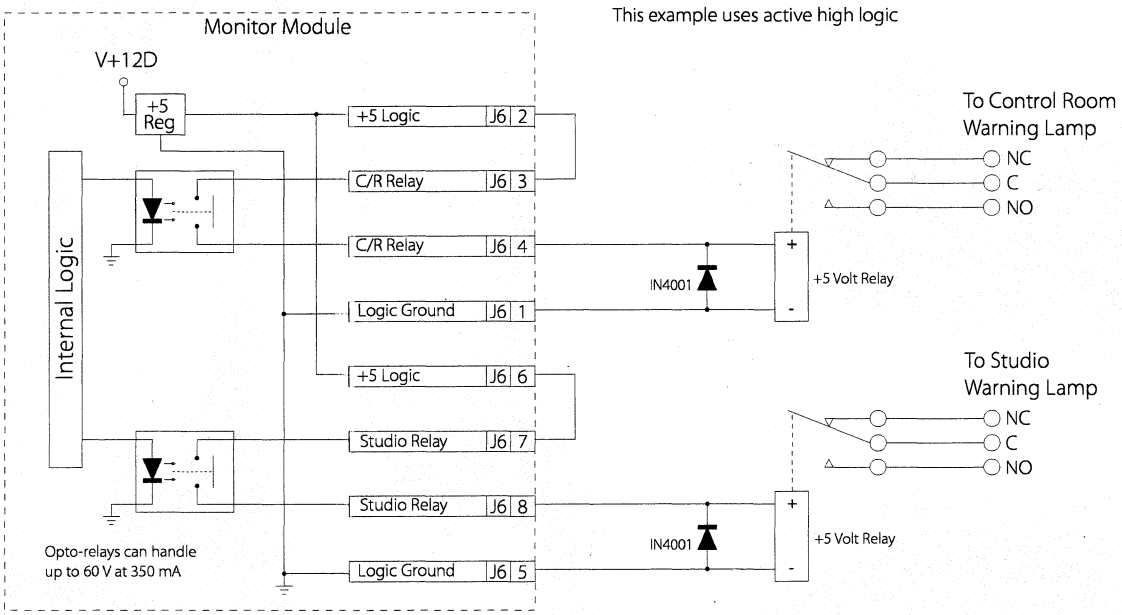

Note: *Do not use the solid-state relay "contacts" to directly switch the AC line voltage to a lamp.*

Quick Reference Guide to AirWave Digital Logic

Input Module Connections

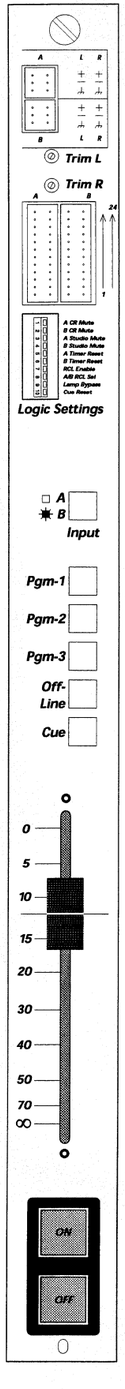

Logic Settings Switch Definitions

#	Switch Name	ON Funetion (set to operator's left)	OFF Funetion (set to right)
1	A CR Mute *	Input A mutes C/R speakers at module On	No monitor muting
2	B CR Mute *	Input B mutes C/R speakers at module On	No monitor muting
3	A Studio Mute *	Input A mutes studio spkrs. at module On	No monitor muting
4	B Studio Mute *	Input B mutes studio spkrs. at module On	No monitor muting
5	A Timer Reset +	Input A resets timer at module On	No timer reset
6	B Timer Reset +	Input B resets timer at module On	No timer reset
7	RCL Enable	Remote control logic is active	Logic inactive
8	A/B RCL Set #	Logic active on input A	Logic active on input B
9	Lamp Bypass	Off lamp turns on at module Off	Off lamp follows ready logic
10	Cue Reset	Cue cancelled at module On	No cue reset at module On

Notes:
RCL Remote control logic
* Both inputs can mute either or both rooms.
\+ Both inputs can reset the timer. Timer reset only occurs when Auto is active on the timer control module.
\# With the standard single logic connector, only one input (A or B) can be set for external logic. With the "B" logic interface option, switch 8 is not used since both inputs have logic. The left-hand connector carries the "A" logic, the right-hand connector carries the "B" logic.

Simplified Remote Control Logic Interface

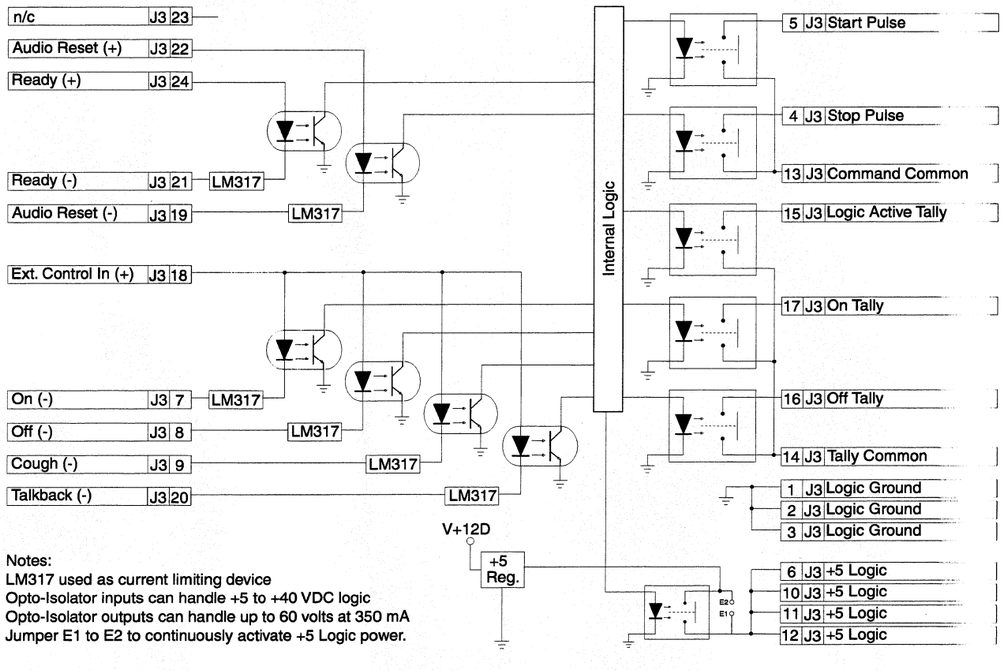

Notes:
LM317 used as current limiting device
Opto-Isolator inputs can handle +5 to +40 VDC logic
Opto-Isolator outputs can handle up to 60 volts at 350 mA
Jumper E1 to E2 to continuously activate +5 Logic power.

AirWave Digital Logic Interface Glossary

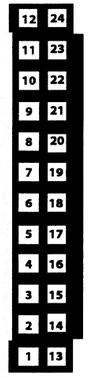

(Contact insertion end view)

REMOTE SIGNAL (connector pin #)	FUNCTIONAL DESCRIPTION OF CONNECTION
START PULSE (pin 5)	Normally Open (N/O) relay contact output. A momentary "contact closure" of 220 ms is generated each time the module On button is pressed. The Common (C) relay contact is the Command Common output. Typically connects to the Remote Start logic input on the peripheral device.
STOP PULSE (pin 4)	Normally Open (N/O) relay contact output. A momentary "contact closure" of 220 ms is generated each time the module Off button is pressed. The Common (C) relay contact is the Command Common output. Typically connects to the Remote Stop or Pause logic input on the peripheral device.
COMMAND COMMON (pin 13)	The Common (C) relay contact output for the Start and Stop Pulse relays. For an active high logic on the pulse outputs, connect Command Common to the logic supply voltage on the peripheral device. For an active low logic on the pulse outputs, connect this pin to logic ground on the peripheral device.
EXT. CONTROL IN (+) (pin 18)	Connecting +5 to +40 VDC to this input enables the active low external control inputs (On, Off, Cough, Talkback). If the control inputs are isolated from other devices (e.g., on a remote mic control panel), the +VDC can come from +5 Logic (jumper pin 18 to pin 6 on the Logic Connector).
ON (-) (pin 7)	From an external On switch. Turns the module On from Off, generating a Start Pulse when pulled low. Input is ignored if the module is already On.
OFF (-) (pin 8)	From an external Off switch. Turns the module Off from On, generating a Stop Pulse, when pulled low. Input is ignored if the module is already Off.
COUGH (-) (pin 9)	From an external Cough switch. The module audio is muted from all assigned buses for as long as the Cough switch is pressed, pulling this pin low.
TALKBACK (-) (pin 20)	From an external Talkback switch. The module audio is routed to the Talkback bus, and muted from all other assigned buses, for as along as the Talkback switch is pressed, pulling this pin low.
TALLYS	Tally outputs are N/O "dry contact" outputs. Typically used to drive indicator lamps, the outputs can sink or source up to 60 volts at 350 mA. The "C" contact for all the tally relays is the Tally Common output.
OFF TALLY (pin 16)	While the module is Off, the Off Tally output is connected to the Tally Common output if the Lamp Bypass is set to off (Logic Settings switch # 9). If Lamp Bypass is on, then the Off Tally illumination is controlled by the Ready input logic while the module is Off.
ON TALLY (pin 17)	While the module is On, the On Tally output is connected to Tally Common.
LOGIC ACTIVE TALLY (pin 15)	Anytime the logic is enabled (Logic Settings switch # 7 is on and switch # 8 is true, or with the B Logic Interface option installed and that input is active), the Logic Active Tally output is connected to Tally Common.
TALLY COMMON (pin 14)	The "C" relay contact for the Off Tally, On Tally and Logic Active Tally relays. Typically, the tally lamps are commoned together to ground and Tally Common is connected to the lamp supply voltage (up to 60 volts). If the tallys use +6.3 volt, 40 mA lamps, and are isolated from peripheral devices as in a remote mic control panel, then the Tally Common can be jumpered to +5 Logic.
READY (+) & (-) AUDIO RESET (+) & (-)	These complementary logic inputs require +5 to +40 VDC on the (+) input and ground on the (-) input for activation. This can be done by connecting an active high logic to the (+) input and grounding the (-) input, or by supplying +5 to +40 VDC to the (+) input and an active low logic to the (-) input.
READY (pins 21 & 24)	When activated while the module is On, the module turns Off without generating a Stop Pulse. While the module is Off (and Logic Settings switch # 7 is On and # 9 is Off), the Ready logic controls the Off lamp illumination to indicate device status. Typically, lamp off indicates the peripheral is not ready to play, lamp on indicates the device is ready, and a flashing lamp indicates the device has already played or is not cued.
AUDIO RESET (pins 19 & 22)	When activated while the module is On, turns the module Off without generating a Stop Pulse. Input is ignored if the module is already Off.
+5 LOGIC (pins 6, 10, 11, 12)	Module logic voltage output source that can deliver up to 200 mA of current. Pins 6, 10 and 12 are opposite likely termination pins to minimize jumper lengths. Pin 11 is an extra power connection pin. Voltage is switched off when the Input logic is not active, unless E1 and E2 are jumpered together.
LOGIC GND (pins 1, 2, 3)	Module logic ground. Pins 1 and 2 are opposite likely termination pins to minimize jumper lengths. Pin 3 is an extra ground connection.

Quick Reference Guide to AirWave Digital Logic

Mic Remote Control Connection Example

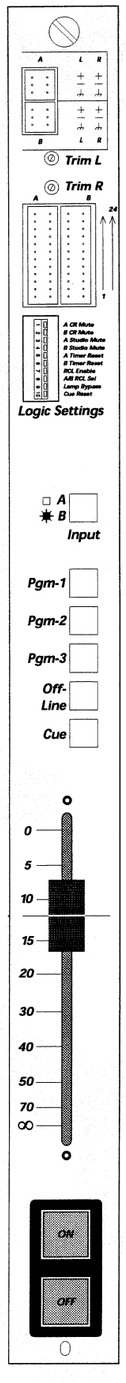

Logic Connector Signal Table

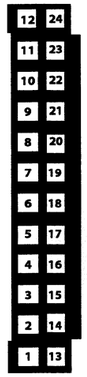

(Contact insertion end view)

PIN #	SIGNAL	FUNCTION
1	**LOGIC GND**	Console logic ground
2	**LOGIC GND**	Console logic ground
3	LOGIC GND	Console logic ground
4	STOP PULSE	Stop command output. "N/O relay contact."
5	START PULSE	Start command output. "N/O relay contact."
6	**+5 LOGIC**	5 volt source.
7	**ON (-)**	Remote On switch input (active low).
8	**OFF (-)**	Remote Off switch input (active low).
9	**COUGH (-)**	Remote Cough switch input (active low).
10	+5 LOGIC	5 volt source.
11	+5 LOGIC	5 volt source.
12	**+5 LOGIC**	5 volt source.
13	COMMAND COMMON	Start & Stop commands common. "C relay contact."
14	**TALLY COMMON**	Tally relays common connection. "C relay contact."
15	**LOGIC ACTIVE TALLY**	Logic active tally output. "N/O relay contact."
16	**OFF TALLY**	Off tally output. "N/O relay contact."
17	**ON TALLY**	On tally output. "N/O relay contact."
18	**EXT. CONTROL IN (+)**	+VDC to enable external inputs On, Off, Cough, Talkback.
19	AUDIO RESET (-)	Remote Audio Off input (active low).
20	**TALKBACK (-)**	Remote Talkback input (active low).
21	READY (-)	Remote Ready input (active low).
22	AUDIO RESET (+)	+VDC to enable Audio Reset function (audio off control).
23	spare	no connection
24	READY (+)	+VDC to enable the Ready function (Off lamp control).

Notes: +VDC is between +5 and +40 VDC.
Output relays can switch voltages up to +60 VDC
Bold indicates connection used in this example

Typical Switch Positions for a CR Microphone on the A Input with a single logic interface

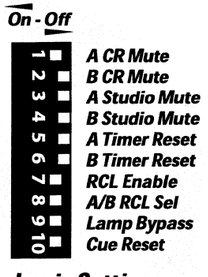

Logic Settings Switch Definitions

#	SWITCH	ON FUNCTION (to left)	OFF FUNCTION (to right)
1	A CR Mute	**Input A mutes C/R speakers at On**	No monitor muting
2	B CR Mute	Input B mutes C/R speakers at On	**No monitor muting**
3	A Studio Mute	Input A mutes studio spkrs. at On	**No monitor muting**
4	B Studio Mute	Input B mutes studio spkrs. at On	**No monitor muting**
5	A Timer Reset	Input A resets timer at On	**No timer reset**
6	B Timer Reset	Input B resets timer at On	**No timer reset**
7	RCL Enable	**Logic active (input set by switch 8)**	Logic inactive
8	A/B RCL Set *	**Logic active on Input A**	Logic active on Input B
9	Lamp Bypass	**Off lamp follows module On/Off**	Off lamp follows Ready
10	Cue Reset	**Module On cancels cue function**	No cue reset function

Notes: RCL = Remote Control Logic
Bold indicates switch setting used in this example
* Setting ignored with B Logic Interface option installed

Simplified Schematic for Interfacing a Remote Mic Control Panel

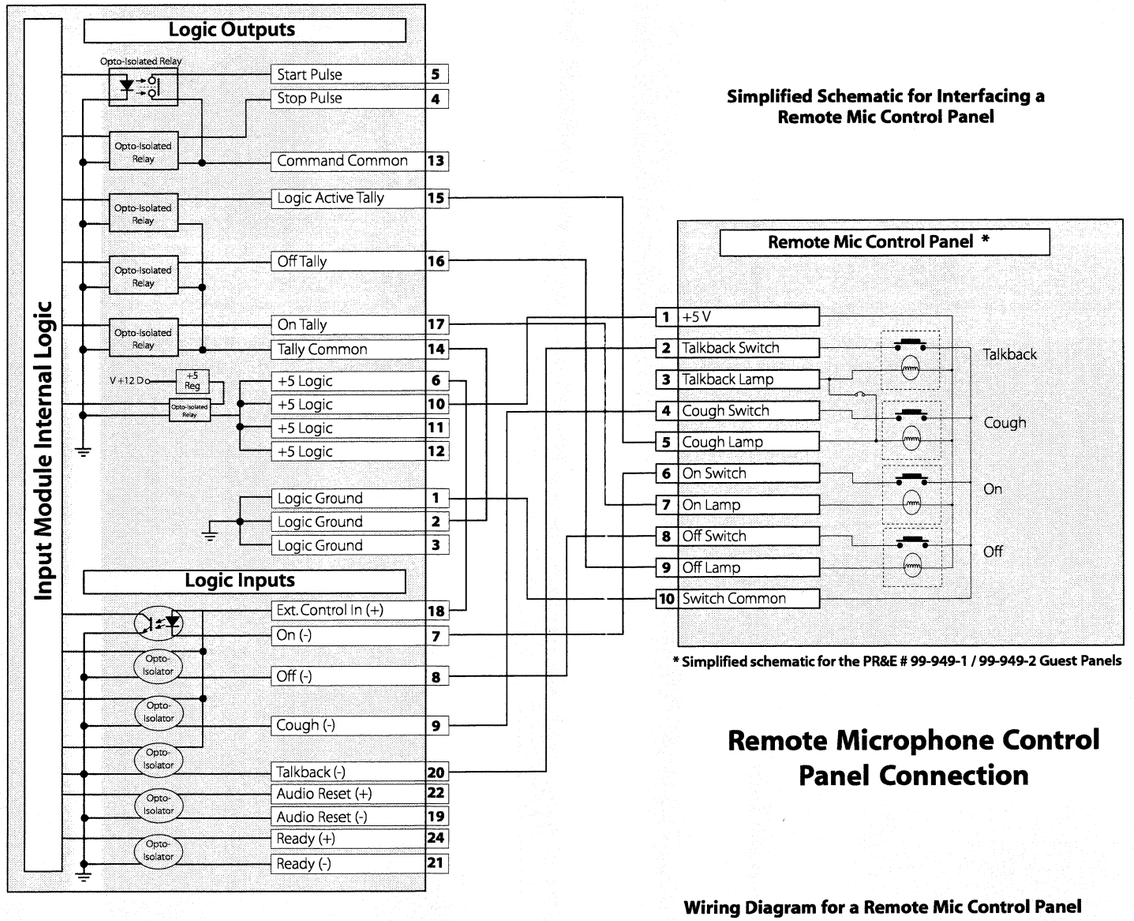

* Simplified schematic for the PR&E # 99-949-1 / 99-949-2 Guest Panels

Remote Microphone Control Panel Connection

Wiring Diagram for a Remote Mic Control Panel

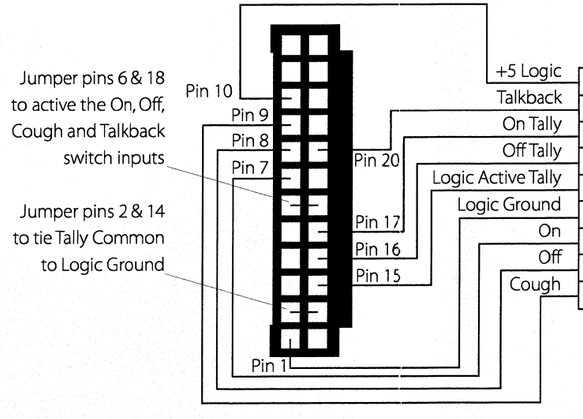

Pin	Remote Mic Control Panel *
1	+5 V
2	Talkback Switch
7	On Lamp
9	Off Lamp
5	Talkback & Cough Lamps
10	Switch Common
6	On Switch
8	Off Switch
4	Cough Switch

Quick Reference Guide to AirWave Digital Logic

Basic Logic Connection Example

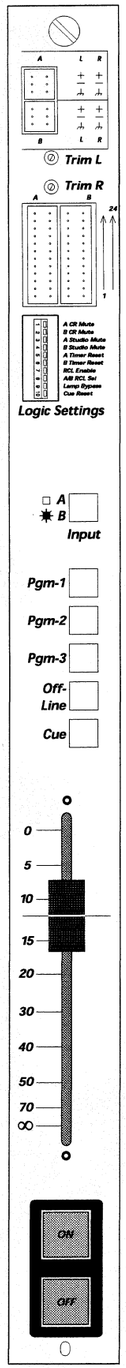

Logic Connector Signal Table

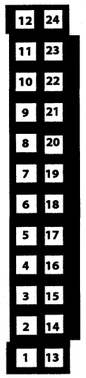

(Contact insertion end view)

PIN #	SIGNAL	FUNCTION
1	LOGIC GND	Console logic ground
2	LOGIC GND	Console logic ground
3	LOGIC GND	Console logic ground
4	**STOP PULSE**	Stop command output. "N/O relay contact."
5	**START PULSE**	Start command output. "N/O relay contact."
6	+5 LOGIC	5 volt source.
7	ON (-)	Remote On switch input (active low).
8	OFF (-)	Remote Off switch input (active low).
9	COUGH (-)	Remote Cough switch input (active low).
10	+5 LOGIC	5 volt source.
11	+5 LOGIC	5 volt source.
12	+5 LOGIC	5 volt source.
13	**COMMAND COMMON**	Start & Stop commands common. "C relay contact."
14	TALLY COMMON	Tally relays common connection. "C relay contact."
15	LOGIC ACTIVE TALLY	Logic active tally output. "N/O relay contact."
16	OFF TALLY	Off tally output. "N/O relay contact."
17	ON TALLY	On tally output. "N/O relay contact."
18	EXT. CONTROL IN (+)	+VDC to enable external inputs On, Off, Cough, Talkback.
19	AUDIO RESET (-)	Remote Audio Off input (active low).
20	TALKBACK (-)	Remote Talkback input (active low).
21	**READY (-)**	Remote Ready input (active low).
22	AUDIO RESET (+)	+VDC to enable Audio Reset function (audio off control).
23	spare	no connection
24	**READY (+)**	+VDC to enable the Ready function (Off lamp control).

Notes: +VDC is between +5 and +40 VDC.
Output relays can switch voltages up to +60 VDC
Bold indicates connection used in this example

Typical Switch Positions for a Peripheral Device on the A Input with a single logic interface

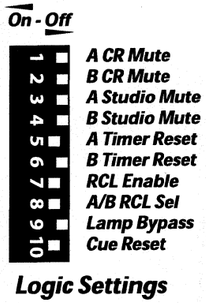

Logic Settings

Logic Settings Switch Definitions

#	SWITCH	ON FUNCTION (to left)	OFF FUNCTION (to right)
1	A CR Mute	Input A mutes C/R speakers at On	**No monitor muting**
2	B CR Mute	Input B mutes C/R speakers at On	**No monitor muting**
3	A Studio Mute	Input A mutes studio spkrs. at On	**No monitor muting**
4	B Studio Mute	Input B mutes studio spkrs. at On	**No monitor muting**
5	A Timer Reset	**Input A resets timer at On**	No timer reset
6	B Timer Reset	Input B resets timer at On	**No timer reset**
7	RCL Enable	**Logic active (input set by switch 8)**	Logic inactive
8	A/B RCL Set *	**Logic active on input A**	Logic active on input B
9	Lamp Bypass	Off lamp follows module On/Off	**Off lamp follows ready**
10	Cue Reset	**Module On cancels cue function**	No cue reset function

Notes: RCL = Remote Control Logic
Bold indicates switch setting used in this example
* Setting ignored with B Logic Interface option installed

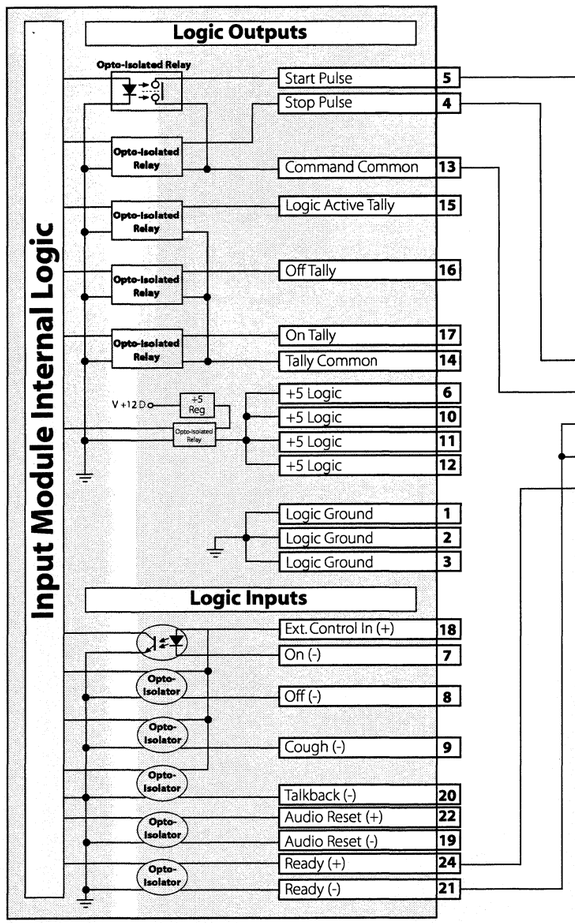

Simplified Schematic for Interfacing the Denon DN-951/961 CD Player

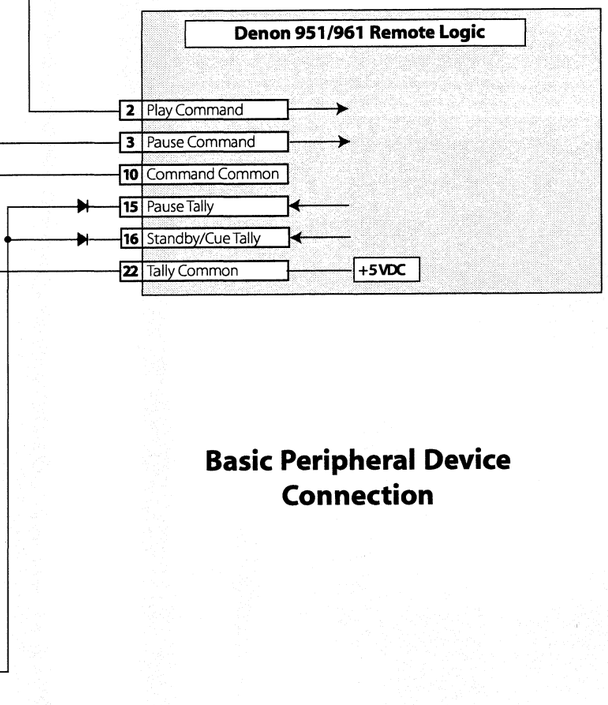

Basic Peripheral Device Connection

Logic Wiring Diagram for Denon DN-951/961

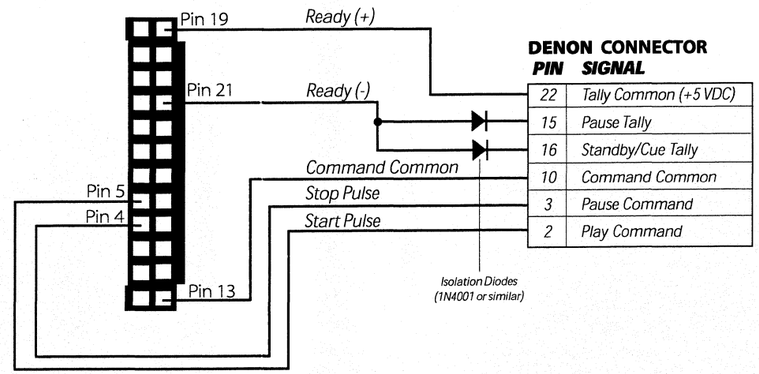

Quick Reference Guide to AirWave Digital Logic

Complex Logic Connection Example

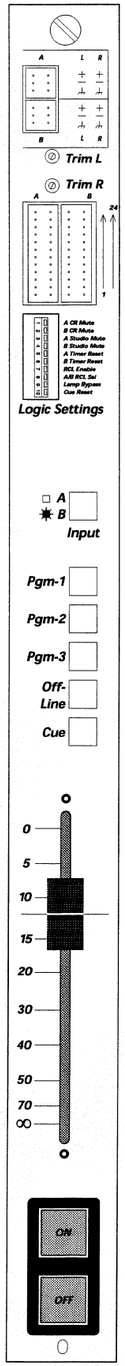

Logic Connector Signal Table

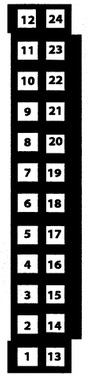

(Contact insertion end view)

PIN #	SIGNAL	FUNCTION
1	**LOGIC GND**	Console logic ground
2	LOGIC GND	Console logic ground
3	LOGIC GND	Console logic ground
4	**STOP PULSE**	Stop command output. "N/O relay contact."
5	**START PULSE**	Start command output. "N/O relay contact."
6	**+5 LOGIC**	5 volt source.
7	**ON (-)**	Remote On switch input (active low).
8	OFF (-)	Remote Off switch input (active low).
9	COUGH (-)	Remote Cough switch input (active low).
10	**+5 LOGIC**	5 volt source.
11	**+5 LOGIC**	5 volt source.
12	**+5 LOGIC**	5 volt source.
13	**COMMAND COMMON**	Start & Stop commands common. "C relay contact."
14	TALLY COMMON	Tally relays common connection. "C relay contact."
15	LOGIC ACTIVE TALLY	Logic active tally output. "N/O relay contact."
16	OFF TALLY	Off tally output. "N/O relay contact."
17	ON TALLY	On tally output. "N/O relay contact."
18	**EXT. CONTROL IN (+)**	+VDC to enable external inputs On, Off, Cough, Talkback.
19	**AUDIO RESET (-)**	Remote Audio Off input (active low).
20	TALKBACK (-)	Remote Talkback input (active low).
21	**READY (-)**	Remote Ready input (active low).
22	**AUDIO RESET (+)**	+VDC to enable Audio Reset function (audio off control).
23	spare	no connection
24	**READY (+)**	+VDC to enable the Ready function (Off lamp control).

Notes: +VDC is between +5 and +40 VDC.
Output relays can switch voltages up to +60 VDC
Bold indicates connection used in this example

Typical Switch Positions for a Peripheral Device on the A Input with a single logic interface

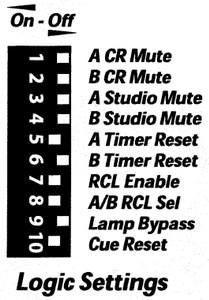

Logic Settings Switch Definitions

#	SWITCH	ON FUNCTION (to left)	OFF FUNCTION (to right)
1	A CR Mute	Input A mutes C/R speakers at On	**No monitor muting**
2	B CR Mute	Input B mutes C/R speakers at On	**No monitor muting**
3	A Studio Mute	Input A mutes studio spkrs. at On	**No monitor muting**
4	B Studio Mute	Input B mutes studio spkrs. at On	**No monitor muting**
5	A Timer Reset	**Input A resets timer at On**	No timer reset
6	B Timer Reset	Input B resets timer at On	**No timer reset**
7	RCL Enable	**Logic Active (input set by switch 8)**	Logic inactive
8	A/B RCL Set *	**Logic active on Input A**	Logic active on input B
9	Lamp Bypass	Off lamp follows module On/Off	**Off lamp follows Ready**
10	Cue Reset	**Module On cancels cue function**	No cue reset function

Notes: RCL = Remote Control Logic
Bold indicates switch setting used in this example
* Setting ignored with B Logic Interface option installed

Simplified Schematic for Interfacing an Enco DADpro

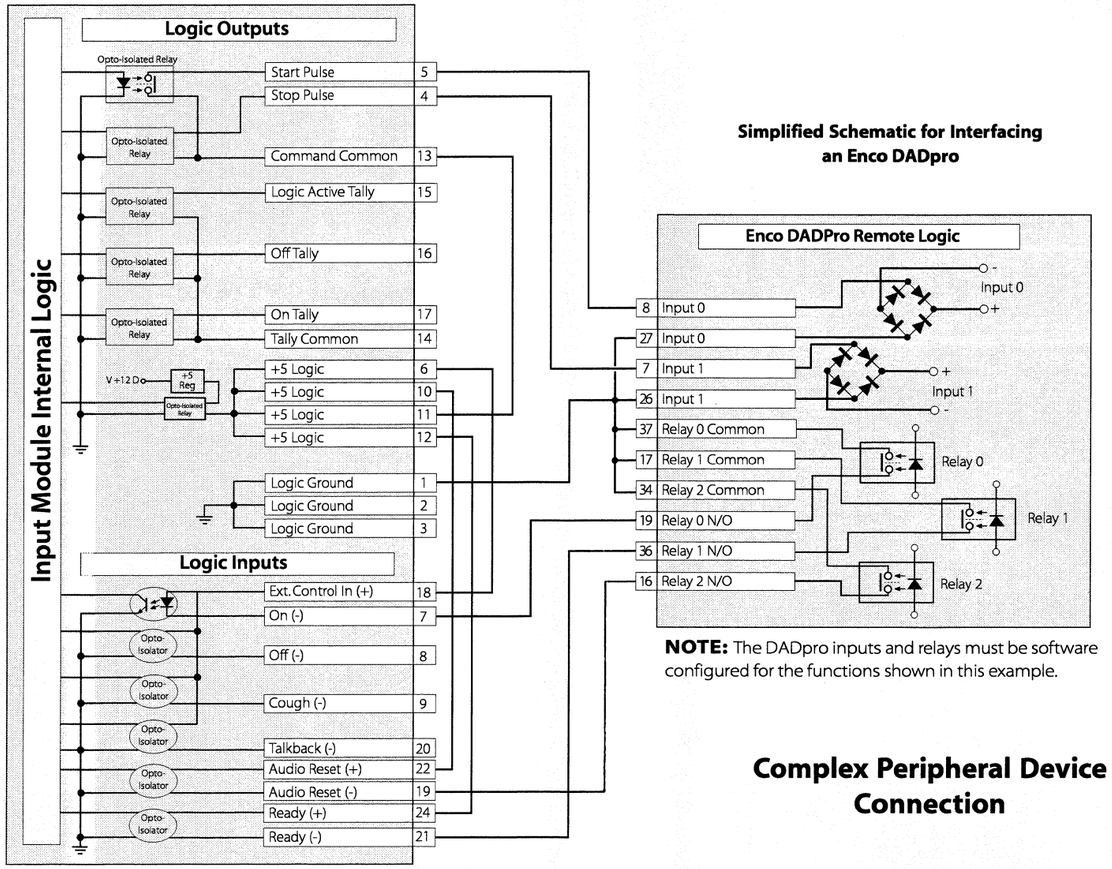

NOTE: The DADpro inputs and relays must be software configured for the functions shown in this example.

Complex Peripheral Device Connection

Logic Wiring Diagram for Enco DADpro

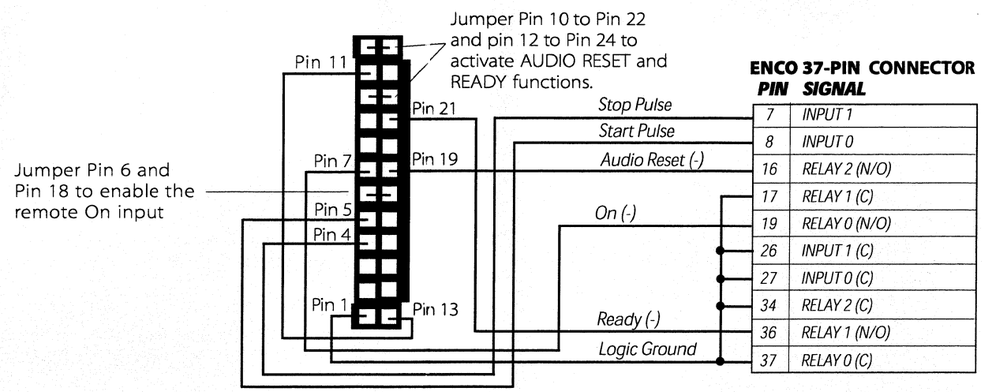

Module Connections

Each module's connections are covered on a separate page in this section.

MICROPHONE PREAMPLIFIER MODULE CONNECTION

There are five 3-pin microphone input connectors on the Microphone preamplifier module. Connect only low impedance, balanced, dynamic or condenser microphones, with nominal mic output levels of -70 to -30 dBu, to these inputs.

Each input connects to a separate mic preamp driving its own line-level balanced analog output connector. The 6-pin output connectors are wired in parallel using the standard pin-out sequence.

The Preamp output signal level is +4 dBu. The outputs are normally jumpered to an analog Input module's A or B input using a short patch cable. Alternatively, the Preamp output can be routed through external patching and/or mic processing gear before feeding an Input module with an Analog SIM installed.

See Chapter 3 *Microphone Preamplifier Module* for a feature description of the Microphone Preamp module.

Mic Preamp Connector Pin Definitions

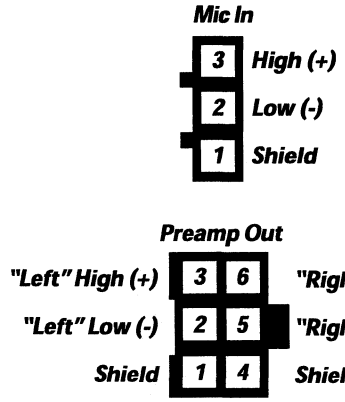

(Connectors shown from wire insertion end)

Direct Connection: Mic Preamp to Input module using patch cable.

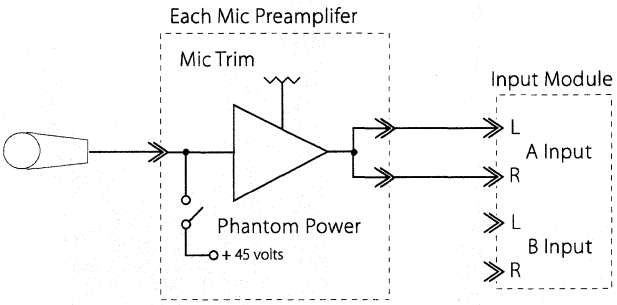

Alternative Connection: Mic Preamp to an external line level processor and then to an Input module.

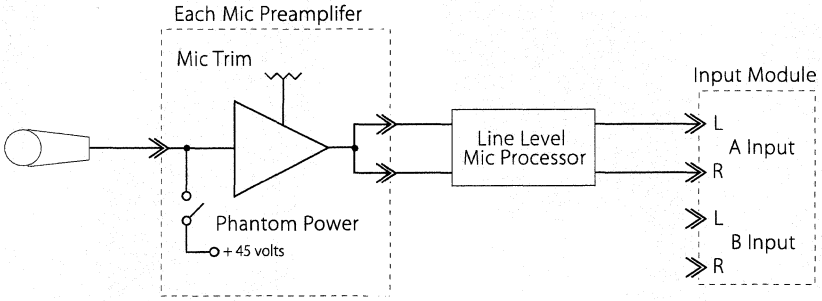

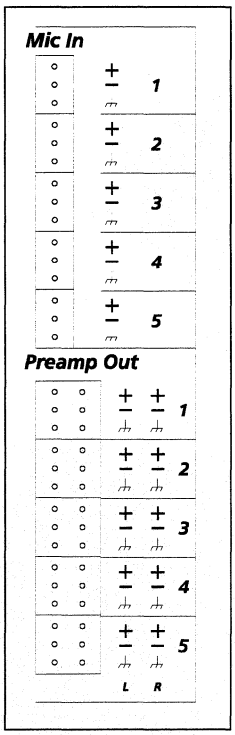

Mic Preamp Module Connectors

INPUT MODULE CONNECTION

Three connectors come standard on each Input module: two 6-pin audio input connectors and one 24-pin logic interface connector. The logic connector is DIP switch set for use with either the A or B input. An optional B Logic Interface card (PR&E # 99-1003) can be installed to provide separate A and B logic control.

The A and B audio inputs support either analog or digital signals, depending upon the type of Input SIM (Single In-line Module) installed. For analog audio, an Analog Input SIM (PR&E # 99-1001) is installed. It accepts signals from -10 dBu to +4 dBu, balanced or unbalanced. With a Digital Input SIM (PR&E # 99-1002) installed, the module accepts AES-3 or S/PDIF inputs.

The faceplate Trim L and Trim R controls set the input reference level when an Analog SIM is installed.

Note: The two controls are not active when a Digital SIM is installed.

Refer back to page 8 for connection information on using unbalanced analog or digital devices with an Input module.

Typical logic connections are shown on fold-out pages 14, 15 and 16. See Chapter 3 *Operation* for a description of the logic functions and audio controls on the module.

Analog Input Signals

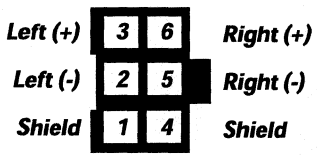

(wire insertion end view)

Digital Input Signals

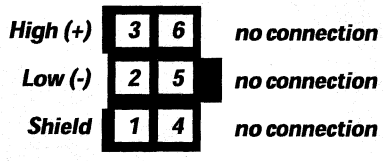

(wire insertion end view)

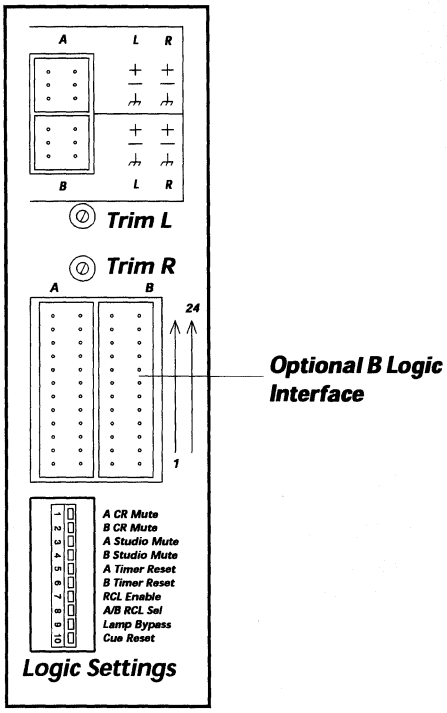

The Input module connectors, Logic Settings switches and Input Trim Controls are hidden under the meter panel in normal operation.

Logic Connectors

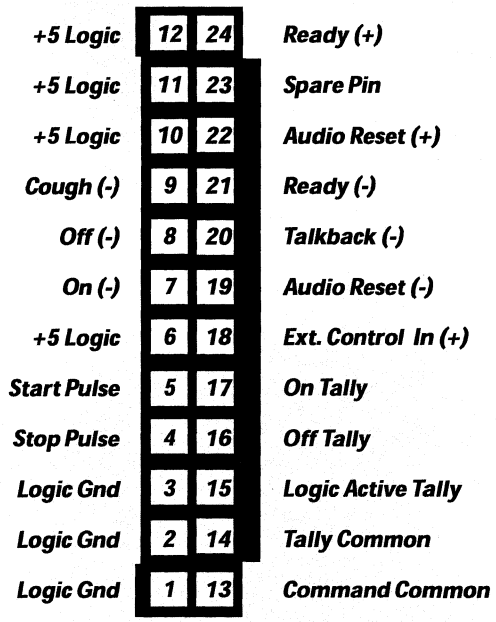

(wire insertion end view)

TELCO MODULE CONNECTION

There are three 6-pin connectors and one 3-pin connector on this module.

The top 6-pin connector (*Hybrid*) connects the audio from the telephone hybrid to the left-hand pins (1, 2, 3) and the mix-minus audio returning to the hybrid on the right-hand pins (4, 5, 6).

The two other 6-pin connectors (*To Tape* and *Aux*) carry identical two-channel connections (caller only on the left and the mix-minus return feed to the caller on the right) for a recording device and for an external monitor.

To monitor the second optional Telco module (Telco 2) in the Studio, the Telco 2 Aux output must be jumpered to an *Ext. Input* on the Monitor module. Refer to the illustration on page 2 for Telco 2's mainframe position.

The 3-pin logic connector carries the Start and Stop logic commands for controlling a Hybrid. Both Start and Stop use a single common connection. See Chapter 3 *Telco Input/Output Module* for a feature description of the controls and Logic Settings switches.

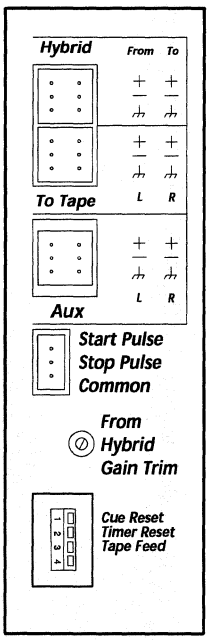

Telco Input/Output Module Connectors, Trim Control and Logic Settings Switches

Hybrid

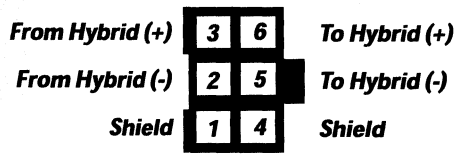

(wire insertion end view)

To Tape & Aux

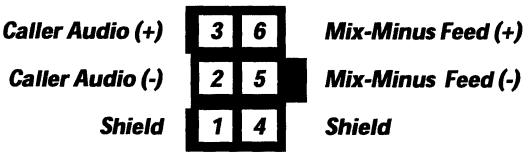

(wire insertion end view)

Telco Logic Output

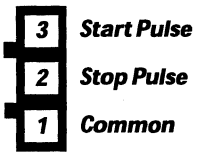

(wire insertion end view)

Telco Logic Block Diagram

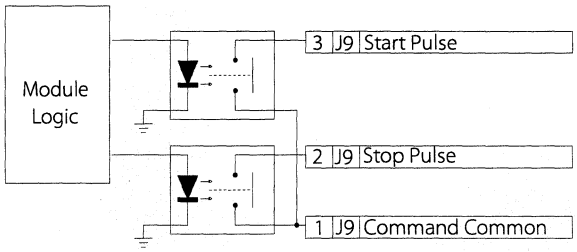

Note: The Start Pulse is triggered by the Telco Module On command. The Stop Pulse is triggered by the Module Off command. Each pulse width is 220 ms in length.

Typical Single Telco Module Hybrid and Recorder Connection

Telco Input/Output Module

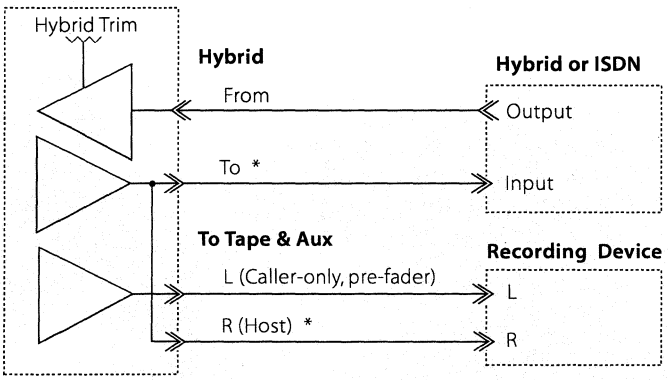

* Contains the caller Mix-Minus Feed, which follows the Pgm-1, Pgm-2, Pgm-3, Offline status of the Telco module.

OUTPUT MODULE CONNECTION

The analog program bus outputs (Pgm-1, Pgm-2 and Pgm-3) use the AirWave standard 6-pin analog stereo pin-out sequence. The digital outputs for Pgm-1, Pgm-2 and Pgm-3 use a 3-pin AMP MOD IV connector. The two analog mono outputs (Main and Aux) are combined onto a single 6-pin connector.

Pgm-1 Main is the main on-air analog output signal converted from the Program-1 digital bus. The Pgm-1 Monitor output jumpers to the Monitor module to provide the Program-1 bus monitor signal. The Pgm-1 Aux output is an additional isolated output.

The Pgm-2 Main and Aux outputs are the balanced analog outputs of the Program-2 bus. The Pgm-3 output is the balanced output of the Program-3 bus.

The left-hand pins (1, 2, 3) on the Mono connector carry the Main Mono audio output. The right-hand pins (4, 5, 6) carry an isolated Aux Mono audio output.

See Chapter 3 *Operation, Output Amplifier Module* for a functional description of the faceplate controls.

Two circuit board switches set the style of metering used and whether the Fader Start function is active. Fader Start allows the fader movement to automatically control module on and off. When the fader is moved from full-off the module is turned on. When the fader is moved back to full-off the module turns off. DS1, switch 1 enables/disables the Fader Start function. DS1, switch 2 sets the type of metering between VU (Volume Unit, USA standard) and PPM (Peak Program, European standard).

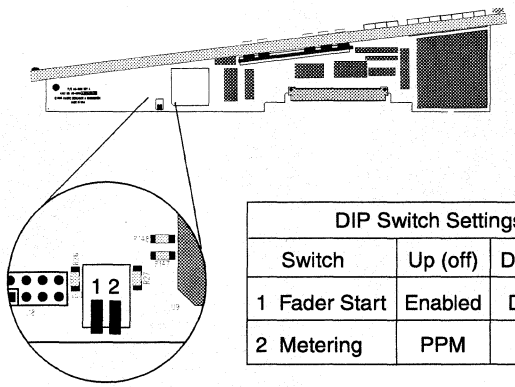

DIP Switch Settings		
Switch	Up (off)	Down (on)
1 Fader Start	Enabled	Disabled
2 Metering	PPM	VU

Main Outputs: Pgm-1, Pgm-2, Pgm-3
Monitor Output: Pgm-1

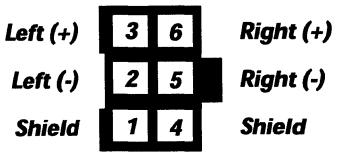

Mono Output

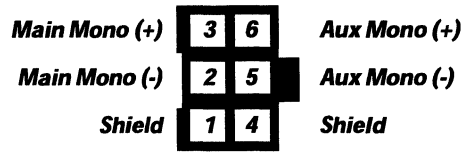

Digital Outputs: Pgm-1, Pgm-2, Pgm-3

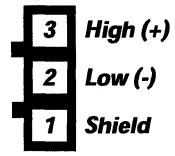

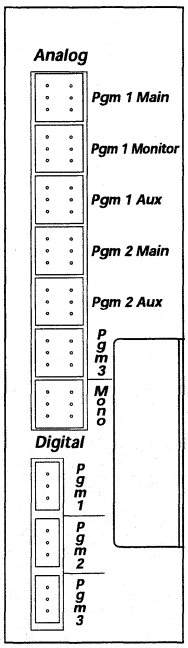

Output Module Connectors

MONITOR MODULE CONNECTION

Ten 6-pin connectors, using the AirWave Digital standard audio pin-out sequence, are on this module. The 3-pin *Cue Spkr* output is pre-wired to the Cue Speaker. Two direct (fixed level, non-muting) outputs are available: *C/R Direct* follows the control room monitor selector and *Studio Direct* follows the studio selector. These can drive guest headphone amplifiers.

The *Cntrl Rm Main* output feeds the amplifier for the control room monitor speakers. This output is controlled by the control room monitor level control and the control room mute logic. The *Cntrl Rm H/P* output may be used to drive an outboard headphone amplifier. This output is controlled by the control room headphone level control.

The *Studio Main* output feeds the amplifier for the studio monitor speakers. The *Studio H/P* output may be used to drive an outboard headphone amplifier having level control. The Studio Main output is level controlled by the studio monitor control and muted by the studio mute logic coming from the Input modules.

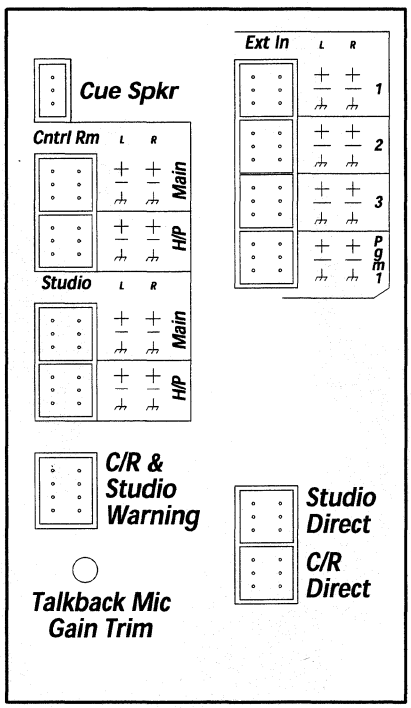

Monitor Module Connectors with Talkback Mic Gain Trim Control

The 8-pin *C/R & Studio Warning* connector drives the appropriate warning/On-Air light controller through solid-state relay contacts. See pages 11 and 12 for additional module logic connection information.

The Pgm-1 input is connected to the Output module's Pgm-1 Monitor output using the supplied jumper cable. The other three External inputs can come from any +4 dBu balanced sources.

See Chapter 3 *Monitor Module* for functional descriptions and operational information.

Cue Speaker output

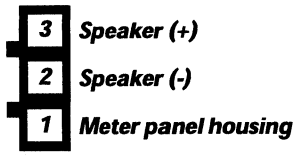

Pgm-1 and External Inputs

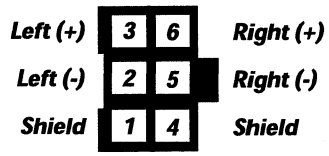

All Outputs
(Cntrl Rm, Studio, Studio Direct, C/R Direct)

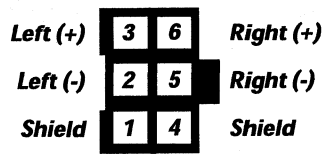

C/R & Studio Warning connector

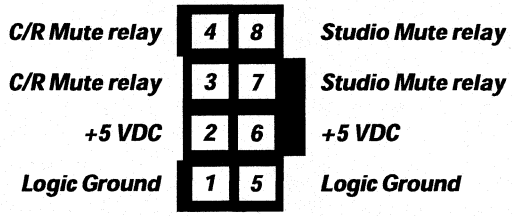

(wire insertion end view on all connector drawings)

REMOTE LINE SELECTOR (RLS) MODULE CONNECTION
(FOR ANALOG AND DIGITAL VERSIONS)

Both RLS versions use nine 6-pin connectors. On the analog version they follow the standard stereo audio pinout sequence. On the digital version, the digital input and output signals connect to pins 1, 2 and 3 only.

The digital RLS inputs are designed for AES/EBU (also referred to as AES-3) signals, although the can also handle most S/PDIF signals. The digital outputs are AES/EBU-compatible.

Note: AES/EBU outputs cannot directly connect to an S/PDIF input. A digital signal convertor must be used.

The analog RLS inputs can be any balanced or unbalanced line-level devices with reference levels of -10 dBu to +4 dBu. The analog RLS outputs are at the same reference level as the inputs (-10 dBu up to +4 dBu). The RLS outputs are typically connected to an Input module or a recording device. Refer back to page 8 for unbalanced device connection information.

Note: There are no level adjustments on the RLS module, therefore all analog input sources must use the same reference level. The RLS is an active device, therefore, the inputs and outputs *cannot* be swapped to make a 2 x 7 device.

The Remote Line Selector module's buttons are spaced so that a Brother P-Touch™ or similar labelling machine can be used to identify the input sources. The lines next to each RLS button are spaced 1/2" [12.70 mm] apart so that either 3/8" [9.525 mm] or 1/2" [12.70 mm] label tape with two lines of type can be used.

See Chapter 3 *Remote Line Selector (RLS) Module* for more operational information.

Identifying the RLS Type

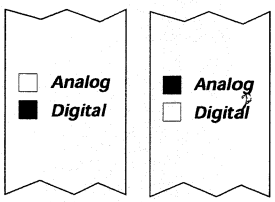

Analog RLS Inputs & Outputs

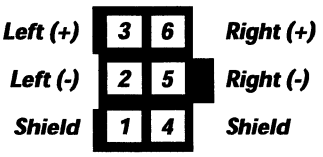

Digital RLS Inputs & Outputs

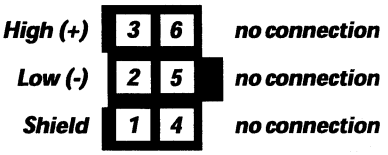

(wire insertion end view on both connector drawings)

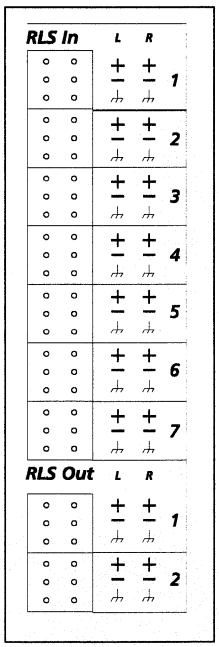

Remote Line Selector Module Connectors

TIMER MODULE REMOTE CONNECTION

There are two connectors on the Timer module. The 8-pin connector is pre-wired to the internal Clock/Timer Assembly. A 3-pin connector is available for resetting and starting a remote timer.

Two normally-open "relay contacts" are used to connect to the Timer. Typically the relay contacts connect to the reset and ground connections on the timer as shown in the examples below. See Chapter 3 *Timer Control Module* for more information.

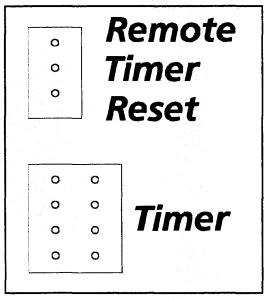

Timer Module Connectors

Remote Timer Reset

SIGNAL	FUNCTION
Relay	Contact "C"
spare	---
Relay	Contact "N/O"

Timer (pre-wired)

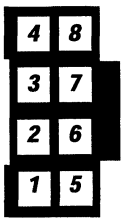

PIN	SIGNAL	FUNCTION
1	Logic GND	Logic ground
2	+12 D	+12 volt supply
3	Start	Start command
4	Stop	Stop command
5	Reset	Reset command
6	Hold	Hold command
7	spare	---
8	spare	---

(wire insertion end view on all connector drawings)

Typical Timer Reset Connections

Connection When Timer Resets and Auto Starts With a Single Reset Pulse

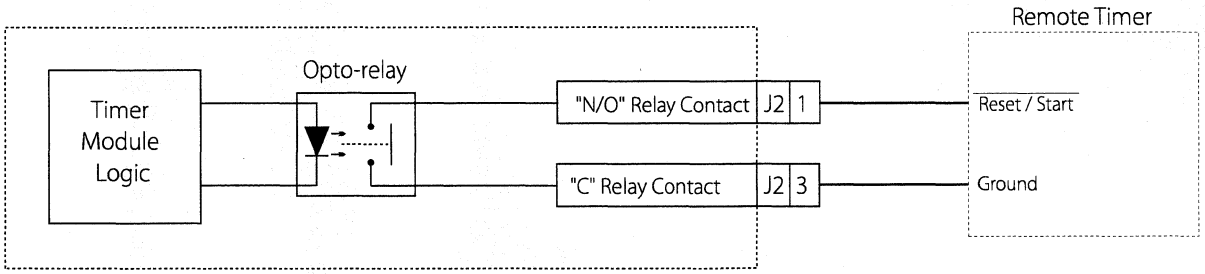

Connection When Timer Has Separate Reset and Start Logic Inputs

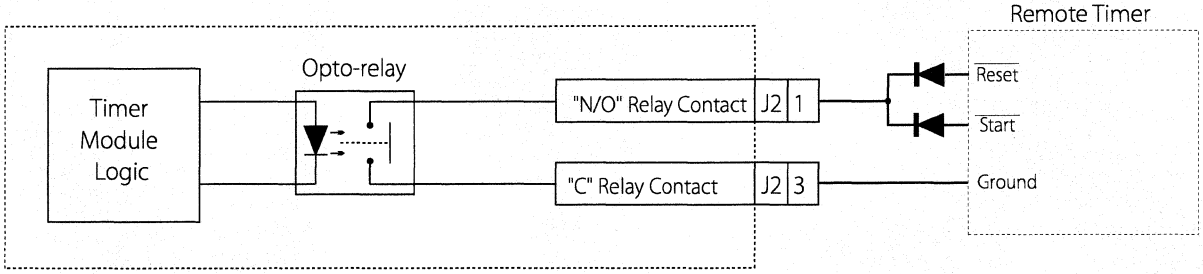

Operation 3

The operational functions for each module and component in the AirWave Digital console is covered in this chapter.

Input Modules

AirWave Digital has six types of input modules available: Microphone Preamplifier, analog or digital Input, Telco Input/Output and analog or digital Remote Line Selector (RLS).

Any combination of Input, Microphone Preamp and RLS modules may be installed into the Input module positions in the mainframe. Up to two Telco modules can be installed in their dedicated mainframe positions (immediately to the left of the Monitor module), although any other Input module can also be installed into these positions. The RLS position (between the Monitor and Output modules) can only have an RLS or Microphone Preamp module, or a tape remote or other custom panel installed in its position.

MICROPHONE PREAMPLIFIER MODULE

The Microphone Preamplifier module amplifies from one to five low-level microphone signals to line-level. The +4 dBu output of each preamplifier can be jumpered directly to an Input module, an analog RLS, routed to a patch bay or connected to an external line-level signal processor.

The module contains five high-performance transformerless microphone preamplifiers with a board-mounted DIP switch (DS1) for switching phantom power to any input. In the illustration inputs 2 and 4 are shown switched on.

Five faceplate-accessible gain trim controls set the preamp gain as required for the application.

Multiple Microphone Preamplifier modules may be used in the AirWave Digital mainframe.

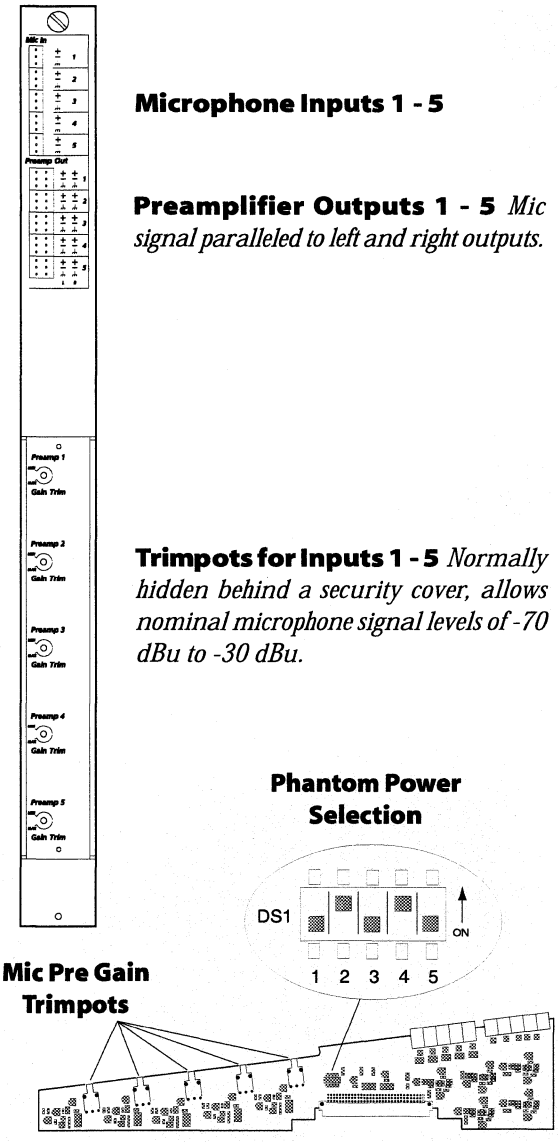

ANALOG OR DIGITAL INPUT MODULE

The Analog version controls preamplified microphones or analog line-level sources on both inputs. The digital version controls AES-3 or S/PDIF digital sources on both inputs. Input modules can be reconfigured in the field by changing the plug-in SIM card. The functional differences for the digital version are listed within brackets.

A/B Inputs *Two balanced analog stereo line-level inputs (A & B). [Two differential AES-3 compatible inputs on connector pins 1, 2, 3 only]*

Logic Connector(s) *Connects a mic remote control panel or a peripheral device for remote control of both the device and the module. Refer to the Input Module Connections Quick Reference (page 13 of the Installation chapter) for more information on the control functions. An optional B Logic Interface can be added for separate logic control on each input.*

A/B Input Selector *Selects the active input (A or B). The button is lit when the B input is selected. Changing inputs while the module is On turns the module Off.*

Off-Line *When active (button lit), the pre-fader and pre-On/Off audio is sent to the Telco module's off-line telephone foldback bus.*

Fader *100 mm level control. Set the fader to the reference line (-12 dB) to achieve 0 VU on the program output meters with a nominal +4 dBu analog input signal (and properly adjusted input level trimpots). [Set the control to nominal, -12 dB to provide unity gain of digital input signals]*

Yellow Off Button *Turns the module off, removing the module's audio from all program buses. May also turn off Cue and initiate the logic control commands* Stop Pulse *and* Off Tally *following the Logic Settings switch positions.*

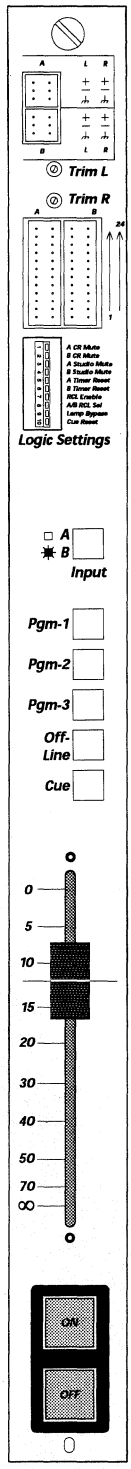

Input Level Trimpots *Individual gain adjustment of the module's left and right channels (post A/B selection). [Not active with a digital SIM installed]*

Logic Settings switches *Sets the module's logic control functions for the A and B inputs. When the B Logic Interface is installed, the A/B RCL Set Switch is not active. Refer to the Input Module Connections Quick Reference (page 13 of the Installation chapter) for more information on the switch functions.*

Pgm-1, Pgm-2, Pgm-3 *Assigns the module to any combination of the Program 1, Program 2 and Program 3 buses. The buttons are lit when assigned to a bus.*

Cue *Sends the pre-fader audio to the console's Cue speaker and to the console operator's headphones. The button is lit while Cue is active.*

Red On Button *Turns the module on, applying the module's audio to the selected program buses. It may also initiate logic control commands* Start Pulse, Timer Reset, On Tally, Cue Off *and mute the control room or studio speakers (and turn on the appropriate warning lamp) following the Logic Settings switch positions.*

TELCO INPUT/OUTPUT MODULE

The optional Telco Input/Output module interfaces a telephone hybrid with the console. The module also provides a host/caller recorder connection. One or two Telco modules may be installed.

Hybrid From *connects the caller audio from the telephone hybrid and* To *sends the selected console mix-minus audio back to the hybrid.*

Logic Output *A Start Pulse and a Stop Pulse is available for hybrid control. Each is a solid-state relay tied to a single isolated common.*

Logic Settings Cue *and* Timer, *when set to the left, reset the Cue function and/or the Timer reset at module On.* Tape Feed *is only active when two Telco modules are installed. It sets how the other caller's voice gets mixed on this module's* To Tape *and* Aux *outputs. When set to the left, both callers are mixed together on the left channel. When set to the right, the other caller is mixed with the right channel mix-minus audio.*

Pgm-1, Pgm-2, Pgm-3 *When lit and the module is On, assigns the caller audio to the Pgm-1, Pgm-2 or Pgm-3 buses and assigns the associated program mix-minus feed to the caller. When two Telco modules are installed both will have the same setting.*

Cue *When lit sends the pre-fader, pre-On/Off audio to the console-mounted Cue speaker and to the console operator's headphones.*

Red On Button *Turns the module On, applying the caller's audio to the selected program bus. The caller Feed is also switched to the selected Program bus mix-minus. When the Timer reset switch is set to the left, the timer is reset. When the Cue reset switch is set to the left, and the Cue is on, the Cue function for this module is turned off.*

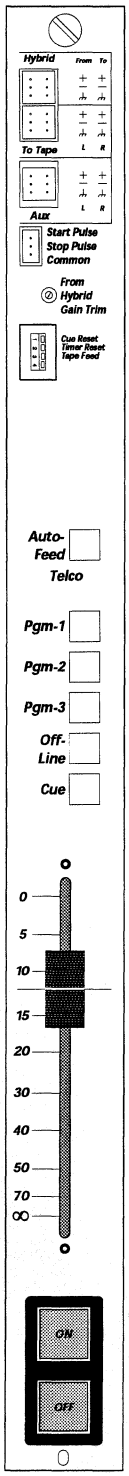

To Tape/Aux To Tape *connects the caller audio to the left channel, and the mix-minus audio (either Off-line or the Pgm assignment mix-minus) to the right channel of a call recorder. These same signals are available on the* Aux *connector. With two Telco modules installed, the left-hand module's* Aux *output can be jumpered to an* External In *on the Monitor module for separate Telco 2 tape feed monitoring.*

From Hybrid Gain Trim *Sets the level of the incoming caller audio from the hybrid. Can be from -10 dBu up to +4 dBu.*

Autofeed *When lit, the module performs automatic switching as described under Telco Operation on the next page. When unlit, the return mix-minus feed is manually selected. When two Telco modules are installed both will have the same setting.*

Off-Line *When lit sends the Off-Line mix to the caller. When two Telco modules are installed both will have the same setting.*

Fader *100 mm level control. Set the fader at the reference line (-12 dB) to achieve 0 VU on the program output meters with a properly adjusted hybrid input level.*

Yellow Off Button *Turns the module Off, removing the caller's audio from the selected program bus and changing the caller Feed to the Off-Line bus when Autofeed is active. When the Cue reset switch is set to the left, and the Cue is on, the Cue function for this module is turned off.*

TELCO OPERATION

The first Telco module (Telco 1) is always installed to the left side of the Monitor Module. A second Telco module (Telco 2) can be installed next to Telco 1.

When two Telco modules are installed, the two modules must track certain switch settings to ensure the correct mix-minus is always sent back to the two callers. Thus the Program bus select, Off-line select and Autofeed buttons on the two modules are automatically linked together so that changing any setting on either module affects both modules.

There are two main operational modes for the Telco module(s): Manual and Autofeed.

Manual Mode

The **Autofeed** button is unlit. Only one Feed source can be selected (Off-Line, Pgm-1, Pgm-2, Pgm-3).

When Off-Line is selected, the caller Feed is the Off-Line mix bus regardless of the Telco module's on/off status. The caller is not assigned to any program bus, thus the caller does ***not*** go on-air if the module is turned On (typically this would only be done to activate the Start Pulse logic output at module On).

When a Program bus is manually selected, the caller Feed is that Pgm assignment's mix-minus, regardless of the module's on/off status. If the module was already On, selecting the program bus adds the caller voice to that bus. Turning the module Off removes the caller from the program bus but will not change the caller Feed.

Autofeed Mode

The red **Autofeed** button is lit. Any one Program bus can be selected. When the module is On, the caller Feed is that program bus assignment's mix-minus.

When the module is turned Off, the caller Feed automatically changes to the Off-Line bus and the Off-line button is lit. The selected Pgm button **winks** to indicate the assigned program bus. If no bus is yet assigned, the three Pgm buttons **flash together** to indicate no bus is selected and the caller will *not* go on-air when the module is turned on.

AirWave Digital Telco Module Configuration

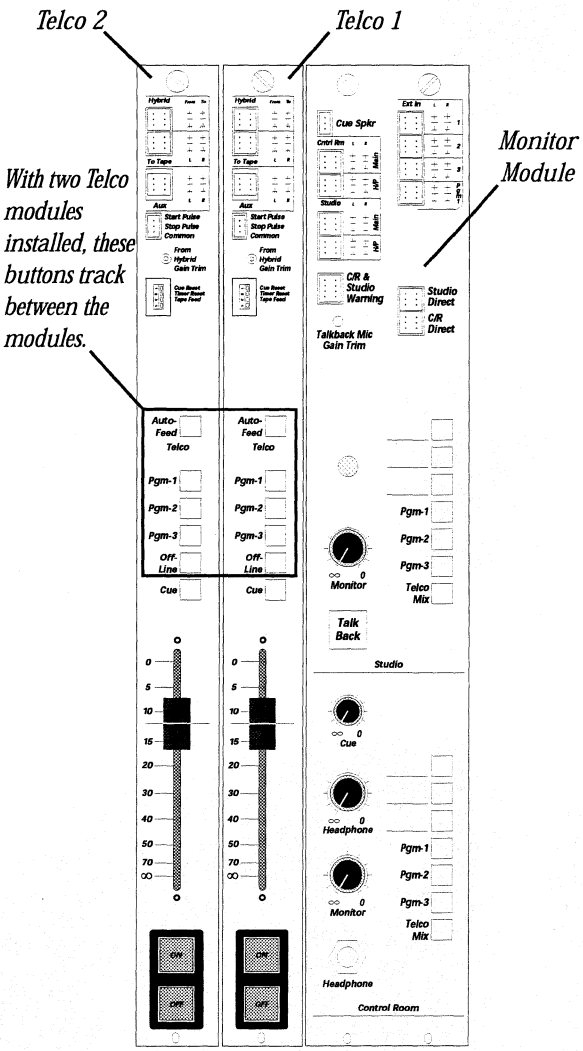

REMOTE LINE SELECTOR (RLS) MODULE — ANALOG OR DIGITAL VERSION

Each RLS module version (stereo analog or AES-3 digital) contains two electronic switches which share seven common inputs to create a pair of 7 x 2 switchers. The seven sources are independently selectable between the two outputs. There are no signal level trim adjustments on this module. The functional differences of the digital version are within the brackets.

RLS In *The seven stereo line-level inputs. Inputs must be at equivalent reference input levels between -10 dBu and +4 dBu. [The seven AES-3 signals connect to pins 1, 2 and 3 only. There is no connection to pins 4, 5 and 6.]*

RLS Type *A Digital RLS is illustrated. The Analog box is filled for an Analog RLS.*

Selector-2 *The seven buttons select the input assigned to **RLS Out 2**. Only one button can be selected at a time.*

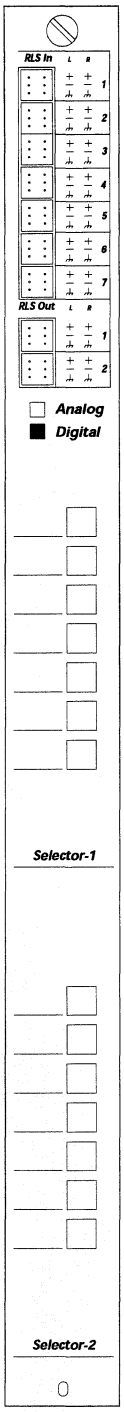

RLS Out *The line-level outputs from Selector-1 and Selector-2. The RLS is a unity gain device, thus the output reference level is equal to the selected input's reference level. [The two AES-3 signals are output on pins 1, 2 and 3 on each connector. There is no connection to pins 4, 5 and 6.]*

Selector-1 *The seven buttons select the input assigned to **RLS Out 1**. Only one button can be selected at a time.*

Output Module

The Output module has the DACs (Digital-to-Analog Converters) for the analog signals (Pgm-1, Pgm-2, Pgm-3, Cue and Telco Mix-Minus) and the line output amplifiers for the three stereo analog Program buses (Pgm-1, Pgm-2 and Pgm-3) and the two Mono outputs (Main and Aux). It also has the output drivers for the three digital Program outputs. Operator selection of the Mono source and the right-hand meter is also on this module.

Pgm-1 Main, Monitor, Aux ***Main*** *is the on-air analog Program 1 balanced stereo output. The* ***Monitor*** *output is jumpered, using the supplied cable, to the Monitor module. The* ***Aux*** *output is a resistively-isolated output.*

Mono *The* ***Main*** *Mono output (pins 1, 2, 3) and a resistively-isolated* ***Auxiliary*** *Mono output (pins 4, 5, 6) are on a single connector. Both are analog outputs.*

Pgm-1, Pgm-2, Pgm-3 *The differential (transformer-coupled) AES/EBU digital outputs for the three program buses.*

Cue *A momentary button to route the Cue bus to the right-hand level meters, overriding the Pgm-2 or Pgm-3 level indication while the button is held.*

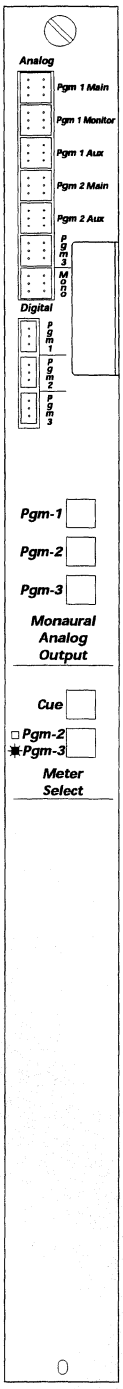

Pgm-2 Main and Aux, Pgm-3 Main *The analog outputs (balanced stereo) of the Program-2 and Program-3 buses.*

Meter Panel Latch *opening.*

Pgm-1, Pgm-2, Pgm-3 *Selects the monaural analog output source. Only one source (Program-1, Program-2 or Program-3) can be selected. The selected analog stereo source is then resistively-summed to mono before being amplified for the active balanced* ***Mono*** *outputs.*

Pgm-2/Pgm-3 Meter Select *When lit indicates that the right-hand meter is displaying the Program-3 output levels. When unlit indicates the right-hand meters are displaying the Program-2 output levels.*

Monitor Module

The Monitor module contains the monitor source selectors, monitor control and Talkback facilities for the control room and one studio.

Cue Spkr *Cue/Talk bus amplifier output. Prewired to the meter panel Cue Speaker.*

Cntrl Rm *The Control Room volume controlled outputs.* ***Main*** *connects to an external amplifier for the Control Room speakers.* ***H/P*** *connects to an external headphone amplifier.*

C/R & Studio Warning *Logic output to the Control Room and Studio warning light interfaces.*

Talkback Mic Gain Trim *Sets the level of the Talkback mic into the studio outputs.*

Talkback Mic *Allows communication to the studio while the* ***Talkback*** *button is pressed.*

Monitor *Controls the level of the* ***Studio Main*** *output.*

Talkback *Sends the Talkback mic to the* ***Studio Main*** *and* ***H/P*** *outputs while pressed.*

Cue *Controls the level of the* ***Cue Spkr*** *output.*

Headphone *Controls the volume of the headphone audio sent to the* ***headphone jack*** *and to the* ***Cntrl Rm H/P*** *output.*

Monitor *Controls the volume of the* ***Cntrl Rm Main*** *output.*

Headphone Jack *Low- or high-impedance stereo headphones can be plugged into this jack. To prevent headphone or hearing damage, always turn the* ***Headphone*** *control fully counterclockwise before plugging in headphones.*

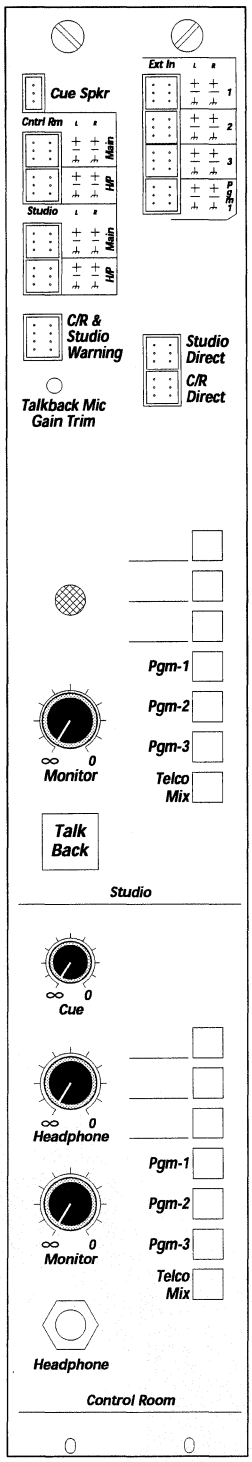

Ext In *External line level inputs that feed the top three buttons on each Source Selector. The* ***Pgm-1*** *input comes from the Output module, using the supplied cable, to feed the Pgm-1 monitor selector button.*

Studio *The selected outputs from the Studio Monitor Source Selector.* ***Main*** *connects to an external amplifier for the Studio monitor speakers.* ***H/P*** *connects to an external headphone amplifier for the Studio headphones.*

Studio Direct *Fixed volume output of the Studio Source Selector. Note that Talkback is not in this output.*

C/R Direct *Fixed volume output of the Control Room Monitor Source Selector.*

Studio Monitor Source Selector *Selects the audio sent to the Studio outputs from the three external audio inputs,* ***Pgm-1****,* ***Pgm-2****,* ***Pgm-3*** *and the* ***Telco 1 Mix*** *(which is the Telco 1's mix-minus on one channel with the Telco 1 caller on the other channel). Multiple sources can be selected for simultaneous monitoring.*

C/R Monitor Source Selector *Selects the audio for the control room outputs and the headphone jack from the three external audio inputs,* ***Pgm-1****,* ***Pgm-2****,* ***Pgm-3*** *and the* ***Telco 1 Mix*** *(which is the Telco 1's mix-minus on one channel with the Telco 1 caller on the other channel). Multiple sources can be selected for simultaneous monitoring.*

Timer Control Module

The Timer Control module is pre-wired to the Clock/Timer assembly in the meter panel. The Timer can be manually controlled using the Timer Control module buttons. When the Auto function is active the Timer is automatically controlled through the Timer reset control logic from the Input modules.

Remote Timer Reset *Logic output to reset a remote timer.*

Meter Panel Latch *opening.*

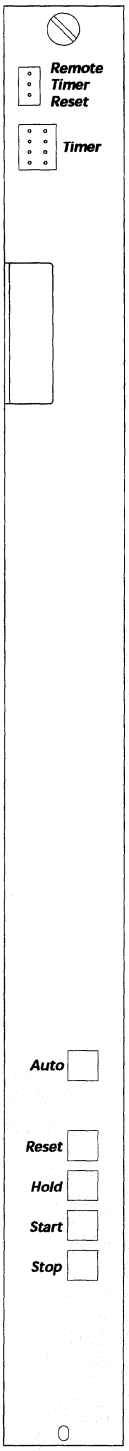

Timer *Supplies power and logic control to the clock/timer.*

Reset *Resets the timer to 00:00.00. If the timer was already counting, the timer will then continue to count up from 00:00.00. Reset pressed while the timer is stopped simply returns the time display to 00:00.00.*

Start *Immediately starts the timer from the displayed time.*

Auto *When Active (lit), the timer automatically resets to 00:00.00 and immediately starts counting whenever an Input module, with its timer reset function enabled, is turned On. When the Auto button is not lit, the timer is disabled from automatic Input module control.*

Hold *When pressed and held, stops the timer's display to show the elapsed time as the timer continues to run. Releasing Hold jumps the time display to the current run time.*

Stop *Immediately stops the timer, leaving the stopped time displayed.*

Meter Panel

The meter panel holds the Clock/Timer assembly, the two sets of bargraph level meters and the Cue/Talkback speaker. The clock has no external controls. Clock time setting requires the use of the Clock Setting Magnet Tool (supplied in the Tool Kit) when the clock is set for master mode. In slave mode, where clock timing is derived from an ESE time code signal, the clock does not need to be set. See the section in Chapter 2, *Installation, Setting the Clock*, for information on setting the time.

Meter Panel Components

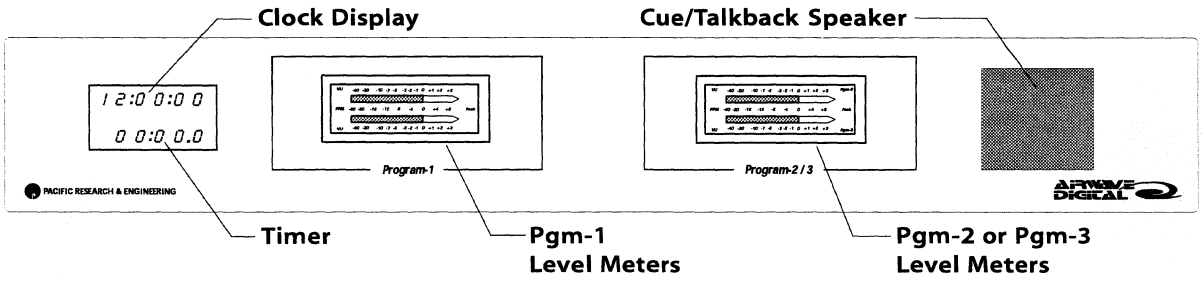

The electronic meter movements have no individual meter calibrations or alignments. The meters use IEEE standard 152-1991 (standard audio program level measurement). When set for PPM display mode, via the Output module DIP switch, the PPM indications will light and a +4 dBu sine wave output signal will display at -8 on the PPM scale. When set for displaying VU, the VU indications will light and a +4 dBu sine wave output will display at 0 on the VU scale. Each of these settings corresponds to -20 dBFS (decibels below Full Scale digital output).

The meters display the left channel audio output on the top row and the right channel audio on the bottom row of each meter. The right hand meter can momentarily show the Cue bus level by pressing the Cue button on the Output module. While this button is pressed the top row of LEDs show the Cue bus output level.

The Cue/Talkback speaker's impedance is 45 ohms with a 3-watt power-handling capacity. The speaker volume is controlled by the Cue volume control on the Monitor module. A 3-watt amplifier IC on the Monitor module drives the speaker. Refer to Chapter 5, *Maintenance & Alignment, Meter Panel Assembly* for speaker replacement procedures.

Equipment Description

4

This chapter has technical descriptions of the mainframe, each AirWave Digital module, the clock/timer assembly and the power supply.

MAINFRAME

The AirWave Digital mainframe consists of a welded all-steel bottom chassis with a hinged overbridge-style meter panel. The modules' metal faceplates complete the mainframe enclosure by fastening to the chassis through a knurled captive fastener at the top of the faceplate and a hex-head faceplate screw at the bottom.

Each circuit board has one keyed 96-pin gold-plated Euroconnector that plugs into the motherboard from the top. The motherboard consists of two connectorized sections in the AirWave Digital-12 and three sections in the AirWave Digital-20. The motherboard sections fasten to formed metal supports on the bottom of the chassis. The steel motherboard supports run the width of the mainframe for rigidity.

To ensure high RFI shielding, all wiring shields ground directly to the chassis through the faceplate and knurled fastener right at the input connectors. A ground screw near the DC power cable entry point ties the mainframe chassis to the technical ground reference.

The ten-foot DC power cable is soldered to the right end of the right-hand motherboard section. A keyed connector fastens the power cable to the rack-mount AirWave Universal Power Supply.

MICROPHONE PREAMP MODULE

For this section refer to the three Microphone Preamplifier module schematic pages (92-961) in Chapter 6.

Each of the five balanced microphone inputs feed a SSM2017, a precision surface-mount microphone preamplifier IC. It unbalances and amplifies the mic signals up to -10 dBu. The preamp ICs are protected against switching transients and DC voltage surges by the Zener diodes, resistors and coupling capacitors found between the input connector and the preamp IC.

DIP switch DS1 has five switches to turn phantom power on or off to the five mic inputs. The switches ship from the factory set in the off position. Only those individual inputs that are powering condenser microphones should be set for phantom power on. The +45 volts is then coupled to the inputs via a pair of 6.81 k resistors.

Faceplate-accessible trimpots (RV1 - RV5) set the preamp gain for a nominal output signal level of +4 dBu.

TP1 - TP5 allow the internal nominal -10 dBu signal level to be monitored. Dual OP275 opamps boost and differentially balance the -10 dBu signals to +4 dBu at the mic preamp output.

6-pin output connectors simplify connection to Input modules, paralleling the left and right channels.

Polyswitch resettable fuses, F1 and F2, protect against board component short circuits. Once the over-current is removed, the fuses automatically reset. Test point TP6 is the -16 VDC check point. TP9 is the +16 VDC check point. TP8 is the phantom supply check point. The ground reference test point is TP7.

INPUT MODULE

For this section refer to the two Input Module schematic pages (drawings 92-1004) and to the two SIM schematic pages (drawings 92-1001 and 92-1002) in Chapter 6.

Analog SIM

The two identical balanced inputs (A and B) connect directly to the SIM socket. With an Analog SIM (99-1001) installed, the stereo audio signals are unbalanced and amplified by OP275 dual differential opamps on the SIM card. Four single-pole single-throw (SPST) solid-state analog switches toggle between the two inputs according to the faceplate A/B button selection.

The selected stereo input is then routed through trimpots R59 and R60 (Trim R and Trim L). The outputs of the trimpots go through buffer/amplifier U4 before being converted into digital signals by U5, a single chip ADC (Analog-to-Digital Converter). The ADC chip output (SDATA_SIM) is routed back to the Input PCA through the SIM socket.

Digital SIM

With a Digital SIM installed (99-1002), the AES/EBU input is coupled to an AES/EBU Receiver (U2) through an isolating transformer (T1) and the A/B selection relay (K1).

U2 converts the incoming AES/EBU signal into a serial data signal (SDATA) with a separate left/right clock (FSYNC) and serial clock (SCLK). In normal operation, the SDATA signal is routed through an Asynchronous SRC (Sample Rate Converter), U4, to synchronize the incoming digital audio with the DSP (via the FS64 clock). The output, SRC_DATA is then routed back to the Input module through the SIM socket as SDATA.

The SRC can be bypassed by physically jumpering E1 to E2. This switches which section of U1 is active. Normally the odd pins couple the signals through to the output while the even pins are in a tri-state mode (at a high impedance). With E1 jumpered to E2, the RX_SDATA from AES/EBU receiver U2 is connected directly to the Input module via the even pins of U1, while the odd pins are at a high impedance.

If valid digital audio is not received, or if there are excessive errors (e.g., loss of lock, parity errors, biphase encoding violation), an ERF (Error Flag) signal is sent back to the Input module where a NOR gate in U15 mutes the SDATA signal.

Input Module

Every Input module fader gets its reference voltages (both High and Low) from the DSP. Each fader's wiper output connects via a separate line to the DSP for individual channel level control.

The faceplate assignment switches (A/B select, bus assignment, Cue, Off-Line) are all on a single universal switch SIM. Each is a momentary SPST switch with an integral LED indicator. The switches connect directly to the gate array chip (FPGA, U14) while the LEDs on the switches are controlled by the FPGA through FET switches Q1 - Q4, Q13 and Q14.

The module's On/Off switches mount on a subassembly (PR&E # 95-969-1). Each switch is a momentary SPST with incandescent lamps controlled by the FPGA through FETs Q5 - Q12 and Q15. The FETs not only turn the lamps on or off, they also generate an AC-like voltage to increase lamp life over normal DC powering.

When the Cue or Off-Line function is active, pre-fader controlled audio is applied to the appropriate summing bus. When any Program select button is active, fader-controlled audio for that channel is then connected to the selected digital Program bus.

The ten-position Logic Settings DIP switch (DS1) is used to tell the FPGA whether logic control is to be active on the A or B input along with

what type of logic signals to use. Either the A or the B input can be selected to use the logic control features in the standard module. With the optional B Logic Interface (PR&E # 99-1003) installed, each input has its own logic control.

There are five logic control outputs and six logic control inputs on each logic interface (92-1004, page 2 of 2). All control inputs (U8 - U13) and outputs (U1 - U5) are optically coupled for isolation and to prevent ground loops. The control inputs are also current limited by U16 - U21 (LM317 regulators) so that any external logic level, from +5 to +40 VDC, can be accommodated.

Polyswitch resettable fuses, F1 - F4, protect the +12, +5, -16 and +16 VDC supply against short circuit damage by board problems. TP1, TP2, TP3 and TP4 are available for checking the +12, +5, +16 and -16 volt supplies after the poly fuses.

TELCO INPUT/OUTPUT MODULE

Refer to the two Telco Input/Output Module schematic pages (92-1005) in Chapter 6.

The Telco Input/Output module is an optional module. Up to two of the modules can be installed into one mainframe in dedicated positions next to the Monitor module.

A single Telco module must be installed in the first position to the left of the Monitor module. A second Telco module can be installed next to the first Telco module. This position automatically configures the second module as "Caller 2," while the first Telco module remains as "Caller 1."

Each Telco module handles interfacing one telephone hybrid. All of the caller mix-minus audio control and caller audio program assignment is built into the module.

The balanced From Hybrid input (shown on page 1 of the schematic) is unbalanced and gain controlled through the two halves of opamp U1. The hybrid input gain is set by faceplate trimpot, RV1 (FROM HYBRID GAIN TRIM).

The output of the second half of the opamp connects to: U15 (an ADC, Analog-to-Digital Converter), to the left channel of the To Tape and Aux outputs (through buffer/balancing opamps U2, U9 and U10), and is coupled through the motherboard to the other Telco module (as CALLER_OUT).

The ADC, U15, outputs digital data (SDATA) to the DSP through the motherboard connector. The digital audio data is handled as in the Input modules, being converted back into analog on the Output module as required for the Cue, mix-minus and analog program outputs.

The fader, like those on the Input modules, also connects directly to the DSP board, controlling the audio level in the digital domain.

The output assignment switchboard plugs into a SIM socket (see page 2 of the schematic). Each assignment switch is a momentary type with an LED indicator driven by FETs Q10 - Q15. The module On and Off switch assembly plugs into the main PCA. The two switches are momentary SPST with incandescent lamp illumination driven by FETs Q1 - Q9.

The To Hybrid audio output (U3, U13, U14) carries a sum of the Telco mix-minus (TEL1_MM) and the caller's audio from the other Telco module (CALLER_IN), if one is installed.

The Telco mix-minus audio (TEL1_MM) comes from a DAC (Digital-to-Analog Converter) on the Output module. It is buffered by one-half of opamp U3 on the Telco module. In addition to going to the To Hybrid output, TEL1_MM also goes to the right channel Tape/Aux output through U2, U11 and U12.

The CALLER_IN audio (from the other Telco module) may also be summed with TEL1_MM following the setting of a DIP switch. The DIP switch controls whether U5 switches CALLER_IN to the left or to the right channel of the Tape/Aux/Monitor outputs.

Tape / Aux Outputs

With one Telco module installed, the left channel output is just the caller. The right channel output is the caller mix-minus audio (TEL1_MM), which is either the assigned program mix-minus (when a Pgm button is assigned on the module) or the Off-line mix audio (when Off-line is assigned). Typically, only the talent's voice is assigned to the Off-Line mix while recording callers off-air.

With two Telco modules installed, the Tape Feed switch (DS1, switch 3) becomes active. This switch sets how the caller audio from the other Telco module gets mixed into the Tape and Aux outputs on that module.

When the Tape Feed switch is set to the left, both callers are mixed together onto the left channel. When it is set to the right, the other caller gets mixed with the mix-minus audio (TEL1_MM) on the right channel.

Monitoring Caller 2

Caller 2 can be monitored through the Cue bus or through the Telco 1 Mix. To monitor Caller 2 separately from Caller 1 in the Studio requires that an audio jumper be connected from the Aux output of the second Telco module to an External Input on the Monitor module.

Auto-Feed

When the Auto-Feed function is active, the module status (On or Off) affects the mix-minus switching. When the module is On, the selected Program mix-minus output is automatically sent to the caller. When the module is turned Off, the Off-line bus audio is automatically switched to the caller.

When Auto-Feed is not active, the selected source (Pgm-1, Pgm-2, Pgm-3 or Off-line) is sent to the caller when the module is both On and Off.

Note: With Off-Line manually selected, the caller will not go on-air when the Telco module is turned On since there is no Program bus assignment.

A front panel DIP switch sets cue, timer and record output options. When the Cue Reset switch is set to the right, the Cue function is turned off when the Telco module is turned On or Off. When the Timer Reset switch is set to the right, Telco module On resets the Timer.

The Tape Feed switch is only active when two Telco modules are installed. When set to the left, the CALLER_IN audio (from the other Telco module) is mixed with the module's caller audio on the left To Tape output. When set to the right, the audio from the other Telco module is mixed with the mix-minus audio (TEL1_MM) on the right To Tape output.

Polyswitch resettable fuses, F1, F2, F3 and F4, are used on the +12, +16, -16 and +5 VDC connections to protect against short circuit damage. TP4 (-16 volts), TP5 (+5 volts) and TP8 (+16 volts) allow the voltages to be checked after the fuses.

MOTHERBOARD

Two motherboard sections are used in the AirWave-12, while three are used in the AirWave-20. Each motherboard fastens to the bottom of the mainframe and plugs together using a Motherboard Interconnect jumper (95-974). The power supply cable is hard-wired to the right-hand motherboard section (schematic 92-1009).

DSP BOARDS

Two DSP (Digital Signal Processing) boards are used in the AirWave-12, while three are used in the AirWave-20. Each board plugs into the motherboard at a right angle from the modules and are fastened to the mainframe's inside rear frame.

There are no adjustments or controls on the DSP boards. Refer to the Motherboard schematics (92-1007, 92-1008 and 92-1009) in the following discussion. Because of the proprietary nature of the DSP boards, a schematic is not included.

The DSP is based on Motorola's 24-bit fixed point DSP integrated circuits. 24-bit data words provide 144 dB of dynamic range. The DSP operates at a nominal sample rate of 48 kHz with on-board crystal synchronization. The internal resolution of 56-bits provides 336 dB of computational dynamic range.

Two DSP options are available from the factory: 44.1 kHz internal sampling and/or external AES-11 reference.

The left hand DSP card (DSP 1) connects to the first eight Input module positions (see 92-1007, P12 for its connector pin-out) on both the AWD-12 and the AWD-20. Each of the first eight Input module positions connect their SDATA outputs, along with their switch outputs and fader wiper voltage, directly to the DSP board. When the Fader Start Logic option is enabled on the Output module, a control signal from the DSP (FADER_ON) is used to turn on the module as the fader is moved from its full off position.

On the AWD-20, the next eight channels (inputs 9 - 16) connect to DSP 2, identical to DSP 1 except for its EPROM.

The right-hand DSP (DSP 3) handles the remaining four Input module positions for each size console and the two Telco positions (which may alternately have Input modules installed). This DSP also creates the main digital output (MIX_SDATA) and the meter outputs (DISPLAY SERIAL DATA 1 and 2). See schematic 92-1009, P12 for pin out information for DSP 3.

Each DSP board is linked to the other(s) via a 6-conductor flex cable on the motherboard. Each board generates its own DSP Go and Fader High and Low reference signals. DSP 1 generates the system clocks and system reset signals.

OUTPUT MODULE

Refer to the six Output Amplifier module schematic pages (92-1006) in Chapter 6.

The right-hand DSP board outputs the MIX_SDATA digital data stream to the Output module FPGA (U9). The FPGA (see 92-1006, page 6 of 6) divides the individual data streams carried within the multiplexed data to form the cue and off-line buses (CUE/TEL_ STRMB), and the three individual program buses (PGM1_STRMB, PGM2_STRMB, PGM3_ STRMB) from this multiplexed input.

The various Program 1 outputs are on 92-1006, page 1 of 6. The PGM1_STRMB (from the FPGA) drives U22, an AES/EBU transmitter, and U25, a DAC (Digital-to-Analog Converter).

The AES/EBU chip converts the serial data into an AES-3 compatible signal that is transformer (T1) coupled to the Pgm-1 digital output. There are no level adjustments on the digital outputs.

The DAC's left and right outputs are capacitively-coupled to the two buffers in U1. Output trim controls, RV2 and RV3, set the output level of the right and left channels, respectively, for a nominal +4 dBu. Output amplifiers U6, U7, U8 and U10 create the balanced Main and Aux outputs. The Aux output is resistor-isolated from the Main output. The Pgm-1 Monitor output is connected (via the supplied patch cord) to the Pgm-1 monitor selector input on the Monitor module.

The Program 2 output is on page 2 of the schematic. It is identical to the Program 1 output without the additional Monitor output (the monitoring connection is done via the motherboard to the Monitor module).

The Program 3 output is on page 3 of the schematic. It is identical to the Program 2 output, except it does not have an Aux output.

The two Mono outputs (Main and Aux) are selected from among the three program buses by U36, a three-input analog switch. The left and right channel inputs come from the DAC buffer outputs on each program amplifier. U36 is controlled by the three faceplate program select switches. The

switches are on a SIM card that plug into the SIM socket (on page 5 of the schematic).

The output of U36 (an analog switch) is buffered and trimmed by U5 and balanced by U19 and U21 to create the Main Mono output. RV1 sets the output level to +4 dBu. The Aux Mono output is resistor-isolated from the Main output.

A DAC (U28) converts the CUE/TEL_STRMB output from the FPGA into the analog Cue and Telco mix-minus signals. Both halves of U4 buffer these signals. The Cue signal goes to the Monitor module while the Telco mix-minus signal goes to the Telco module(s).

The Output module also has a board-mounted DIP switch (DS1) that sets whether the global Fader Start Enable function is on or off and whether the meters display VU or PPM.

Four polyswitch resettable fuses (F1, F2, F3 and F4) protect the supply against short circuit damage. TP9, TP10, TP12 and TP16 are used to check the +16, -16, +5 and +12 volt supplies, respectively.

MONITOR MODULE

The Monitor module is a double-width module with two independent circuit boards plugging into two motherboard positions. Refer to the nine Monitor module schematic pages (four pages for 92-964, five pages for 92-965) found in Chapter 6.

The left hand circuit board is the Monitor 1 board (92-964 schematic). It contains the monitor controls (Cue, Monitor, Headphone levels) for the Control Room, the Talkback to the Studio mic and control circuits, and the master level control for the Studio monitor speakers.

The right hand circuit board is the Monitor 2 board (92-965 schematic). It is the same circuit board as in the Analog Remote Line Selector module. When used as a Monitor 2 board, a different FPGA chip is installed and several additional parts are stuffed into the board for logic control of the Monitor module. A complete circuit description for this board is found later in this section under *Remote Line Selectors.*

The Monitor 1 board is divided between the Control Room functions and the Studio functions.

Control Room Functions

The CR Select Input comes from the Monitor 2 board seven-button Control Room monitor source selector. Being a balanced signal, the left and right channels are unbalanced by the two halves of opamp U1 and capacitively coupled to both the CR Monitor Pot and to the CR headphone signal assignment switcher U8.

The output of the CR monitor pot goes through mute switch U5 (controlled by the CR Mute logic bus) before being buffered and balanced for output by U2 and U3. This creates the main CR Monitor Output.

Studio Functions

The Studio Select Input comes from the Monitor 2 board seven-button Studio monitor source selector. The balanced signals are unbalanced by opamp U9 and capacitively coupled to both the Studio Monitor Pot and to the Talent headphone circuit (switcher U39 and opamps U15 and U16).

Talkback is inserted into the studio monitor signal by U10 under control of the ST Talkback command. U11 and U12 amplify and balance the signal for the ST Monitor Output.

Cue/Talkback

The Cue/Talkback audio is summed by one-half of opamp U4 and capacitively coupled to the Cue pot and to the headphone signal assignment switcher. The output of the Cue pot connects to the Cue speaker amplifier IC (U23) which is muted by Q1. Q1 is controlled by the Cue Mute logic signal that comes from U35 (Monitor 2 FPGA).

A built-in electret Talkback microphone is amplified and buffered by opamp U13. Trimpot (RV1) sets the mic volume for the monitor and headphone feed. The Talkback mic audio is switched into the Studio Monitor Output and the Talent H/P audio by switcher ICs U10 and U39 in response to the Talkback button being depressed and held.

CR Headphone

The CR headphone audio is either the selected source monitor or the Cue/Talk bus. When the Cue/Talk logic signal (from U35, the Monitor 2 FPGA) goes high, the monitor audio is cut off and Cue/Talk audio is fed to the console headphones. The CR Headphone Level control sets the level to the headphone amplifier U22 (for the module headphone jack) and to the balanced CR Headphone Output driver circuit (opamps U7 and U14).

Polyswitch resettable fuses, F1, F2 and F3, are used on the +5, +16 and -16 VDC connections to protect against short circuit damage. TP3, TP8 and TP9 can be used to check the +5, -16 and +16 volt supplies, respectively.

REMOTE LINE SELECTORS (RLS)

There are two RLS modules available: Analog and Digital. Refer to the Analog RLS schematic (92-965, four pages) and the Digital RLS (92-1012, two pages) in Chapter 6.

Analog RLS

The Analog RLS has seven line-level buffering and switching circuits with two outputs in a 7 x 2 matrix. The line-level signals (RLS 1 - RLS 7) are AC coupled into the module. Opamps (U1 - U7) unbalance the left and right signals, which are capacitively coupled to the solid-state assignment switches (U20 - U33). Pressing a front panel Ext. 1 - 7 button routes the External input audio through the switches to U11 - U14, which buffer and rebalance the audio for the outputs (RLS 1 and RLS 2).

Each front panel selector switch bank is on a plug-in assignment switch board. Each RLS select switch is a momentary type with an LED indicator driven by Q1 - Q14.

Polyswitch resettable fuses, F1, F2 and F3, are used on the +5, +16 and -16 VDC connections to protect against short circuit damage. TP1, TP9 and TP8 can be used to check the +5, +16 and -18 volt supplies, respectively.

Digital RLS

The seven Digital RLS inputs can be resistively- (in the -1 version) or transformer-coupled (in the -2 version) into the seven differential line receiver/transmitter chips (U2 - U8). Five of the ICs (U2 - U6) only use the receiving half of the chip, while U7 and U8 use both halves, with the two transmitters creating the two RLS outputs (J8 and J9).

The seven outputs from the receivers go to U1, the FPGA (Field Programmable Gate Array) that handles all switching and switch lamp control. The FPGA responds to the two banks of seven faceplate switches, only allowing one switch to be active at a time per bank. All switches for each bank are on an Assignment Switchboard (95-968-4). The boards plug into SIM sockets J10 and J11. The switch lamps are driven by FETs Q1 - Q14.

The Digital RLS uses only +5 volts, protected by a Polyswitch resettable fuse, F1. TP1 is available to check the +5 volt supply after the fuse.

TIMER CONTROL MODULE

For this section refer to the Timer module schematic page (92-960) in Chapter 6.

The Timer module routes power and timer control to the clock/timer assembly through the timer connector. A remote timer reset command is also output through the remote timer reset connector.

The module holds the logic-state backup batteries used in case of momentary power outage. Two AA batteries ensure the console powers back up in the same logic state when power fails momentarily.

The faceplate timer control switches (Start, Stop, Reset, Hold) manually control the timer section of the clock/timer assembly. The Auto button controls whether the timer reset bus logic is connected to the timer. When Auto is active (button lit) the timer automatically resets at module On for any module with the Timer Reset logic function turned on (Logic Settings switches 5 or 6 set to the operator's left).

CLOCK/TIMER ASSEMBLY

For this section refer to the clock/timer schematic page in Chapter 6.

The clock/timer consists of a clock/timer display and a main clock/timer circuit board. A ribbon cable connects the display board to the main clock/timer circuit board.

The display board has the eleven 7-segment displays for the clock and timer and three Hall-effect switches. The Hall-effect switches are used for setting the time when the clock is run in manual mode.

The clock/timer is built around a microcontroller IC (U1). The microcontroller handles both the timer and clock display functions. For a 12-hour clock display a PR&E # 21-122-1 microcontroller is used (standard with the AirWave Digital). For a 24-hour clock display a PR&E # 21-122-2 microcontroller can be substituted.

The +12 volt supply, from the timer control module, is regulated on-board to generate the +5 volt and +8 volt supplies. The +8 volts is used exclusively by the clock oscillator circuit.

The clock oscillator (U2, Q21, U10) controls the clock timing when the Master/Slave switch (S1, #1) is in Master mode. In Slave mode, the clock timing signal comes from an ESE TC76 or TC89 time code signal input on BNC connector J3. The time code signal is buffered (U9, Q23, U3) and applied to the microcontroller. If ESE time code is lost, the microcontroller will revert to using the internal oscillator as the timekeeping reference (flashing LED CR3 to indicate time code loss).

The timer can be controlled through the console's timer reset bus (when the Auto function is active) and manually through the timer control module buttons.

S1, #2 controls whether the tenths of seconds display is turned on while the timer is running. The tenths of seconds are always displayed when the timer is stopped.

BARGRAPH METERS

The two sets of meters are mounted on a single board in the meter panel. The meter input (J1) comes from the right-hand motherboard connector J2. Refer to the two page meter schematic (92-1011) in Chapter 6.

Each of the four meters (Pgm-1 Left, Pgm-1 Right, Pgm-2/Pgm-3 Left and Right) is made up of three 10-segment LEDs (D1 - D4, D7 - D14) with a dual LED (D5, D6) Full Scale Peak Indicator. Two 8-input NPN drivers (U3 and U4) supply anode current, while two 4-input NPN drivers supply cathode current sinking. The drivers are controlled directly by the programmable microprocessor (U1).

U8, a 555 oscillator, supplies an 80% duty cycle 2 kHz multiplexing signal to the microprocessor. This signal also is used to set the LED brightness. Both meters can be set to display Volume Units (VU) or Peak Program (PPM). The type of display is set by an internal DIP switch on the Output module. This controls the logic level of the DISPLAY VU/~PPM line which, through NOR gate U2, either lights the PPM or VU LEDs in the two meters through drivers Q1 or Q2. Likewise,

the ~PGM2/PGM3 line controls NOR gate U7 to turn on either the PGM2 LED or the PGM3 LED through drivers Q3 or Q4. This is in response to the setting of the Output module's PGM-2/PGM-3 meter switch.

The meter supply voltages (+5V LOGIC and LED POWER) are protected through polyfuses F1 and F2.

AIRWAVE UNIVERSAL POWER SUPPLY

For this section refer to the two power supply schematic pages in Chapter 6. For a more complete discussion of the Power Supply refer to the *AirWave Universal Power Supply Technical Manual* (PR&E # 75-41).

The AirWave Universal Power Supply (AUPS) consists of a power transformer, selectable for 115 VAC or 230 VAC operation, chassis-mounted rectifiers and filter capacitors and a regulator circuit board mounted to a heat sink.

The power supply is protected by a replaceable AC mains fuse located in the power entry module, thermal circuit breakers (auto-reset type) within the transformer primary, internal fuses on the transformer's critical secondary outputs and self-protected current-limiting regulators.

The power transformer has four secondary windings. Three are wired to bridge rectifiers and filter caps mounted on the chassis floor, while the fourth is connected to a bridge rectifier (CR6) and filter cap on the regulator circuit card. All voltage regulators fasten to the heat sinks.

The power supply has five output voltages:

- +5 volts @ 6.5 A for the console's logic circuitry
- +12 volts @ 4.0 A for the clock/timer
- ±16 volts @ 1.0 A each for the audio circuitry
- +45 volts phantom @ 0.100 A for condenser microphones.

The +5 volt (U2) and +12 volt (U1) regulator circuitry is identical with only their divider resistor values being different. The ±16 volt regulator circuitry (U3 and U4) employs a dual voltage tracking device (U5) that monitors the regulated voltage outputs. If either voltage drops, the other will follow to keep the two voltages equal.

The +45 volt supply uses a pass-transistor design (Q1, Q2, CR5). Zener diode CR5 clamps the base voltage of Q1 and the collector of Q2 to a maximum of +47 volts. Q1 and Q2 automatically adjust the current to keep the supply voltage constant. The nominal output voltage will typically be +45 volts.

Maintenance & Alignment

5

For troubleshooting, the optional AirWave Digital module extender (PR&E # 99-1014) allows easy access to any module's circuit board test points. Note that two module extenders are required for troubleshooting the Monitor module.

Parts and Repair Services

All of the switches, button caps and faders are easily field replaceable. Although schematics are included for field troubleshooting purposes, it is recommended that modules be returned to PR&E for circuit board service due to their surface mount construction.

PARTS ORDERING & REPAIR INFORMATION

Spare parts, accessories and additional modules can be purchased through a sales representative or through PR&E's Customer Service Department. To expedite the ordering process, and ensure the correct parts are ordered, have the PR&E part numbers at hand when ordering.

Most repair parts are shipped the same day. Modules and other assemblies may have lead times exceeding two weeks, so order accordingly.

Parts returned to PR&E for service, exchange, or credit must have an RMA (Return Material Authorization) tracking number assigned to them by the Customer Service Department. Parts or components returned without an RMA number written on the outside of the packaging may be subject to customer return or to an additional handling fee.

To order parts or request an RMA, contact PR&E by phone, fax, e-mail or post:

Pacific Research & Engineering
Attention: Customer Service Department
2070 Las Palmas Drive
Carlsbad, CA 92009 USA

Phone: 760.438.3911, 8:00 to 5:00 Pacific Time
Fax: 760.438.9277
E-mail: service@pre.com

All parts orders and serviced parts are shipped FOB Carlsbad using UPS Groundtrak in the USA, unless otherwise specified by the client. Federal Express or UPS two-day, overnight and Next Day A.M. delivery is also available for most items. Orders must be placed before 2:00 PM Pacific Time, and shipping method must be specified at time of order, for parts to go out the same day.

Parts orders or repair services can be charged to American Express, VISA or Mastercard, or shipped COD, if not on-account with PR&E. Contact a sales representative for account information.

SPARE & REPLACEMENT PARTS INFORMATION

All PR&E parts are categorized using a two digit part type prefix, a dash, and a three or four digit part ID number (a second dash and a suffix number may also be used to identify part variations). The Replacement Parts table on the next page lists the AirWave Digital parts typically subject to wear and tear. It is recommended that one or more of each of these be kept in the on-site spares stock.

AirWave Digital Replacement Parts

PR&E #	Description or Use
11-53	Bridge Rectifier #
12-95	On, Off, Talkback lamp & housing
12-101	On, Off, Talkback lamp only #
20-106	Voltage Regulator, adjustable #
20-107	Voltage Regulator, adjustable #
24-98	Cue Pot
24-100	CR and Studio Monitor, Headphone Pot
25-853	Pgm and A/B select switch *
25-854	Autofeed switch *
25-855	Cue switch *
25-856	Off/Line switch *
25-858	Module On switch **
25-859	Module Off switch **
25-860	Talkback switch **
25-870	White button cap ***
25-871	Red button cap ***
25-872	Yellow button cap ***
90-1016	Input & Telco module fader

\# Supplied in 76-728 Spare Parts Kit.
* Used on the 95-968-x switchboards.
** Used on the 95-969-1 and -2 switchboards.
*** Blank button cap numbers. Also used for custom button engraving. Add a -1 suffix for standard engraving (Talkback, On, Off).

The AirWave Digital Assemblies & Modules table lists the modules and assemblies available for field servicing of the AirWave Digital console.

INSTALLATION KIT PARTS

The installation kits (Tool kit, Connector kit for the mainframe and for each Input, Telco, Mic Pre or RLS and a Spare Parts Kit) are shipped with each new console. The kit contents and quantities are listed in the table below.

Connector and Tool Kit Components

PR&E #	Description or Use	Qty.
76-752	**Mainframe Connector Kit**	—
14-482	3-pin AMP housing	9
14-484	6-pin AMP housing	21
14-486	8-pin AMP housing	1
15-938-1	Receptacle contacts	162
50-5	AA Lithium battery	2
76-752-1	**Input Connector Kit**	—
14-484	6-pin AMP housing	2
14-513	24-pin AMP housing	1
15-938-1	Receptacle contacts	22
76-752-2	**Telco Connector Kit**	—
14-484	6-pin AMP housing	3
14-482	3-pin AMP housing	1
15-938-1	Receptacle contacts	23
76-752-3	**Analog RLS Connector Kit**	—
14-484	6-pin AMP housing	9
15-938-1	Receptacle contacts	54
76-752-4	**Digital RLS Connector Kit**	—
14-484	6-pin AMP housing	9
15-938-1	Receptacle contacts	27
76-727	**AirWave Tool Kit**	—
70-44	Sifam knob removal tool	1
70-90	Hex Wrench	1
70-126	Crimp Tool	1
70-129	Contact Removal Tool	1
90-151	Clock Magnet Tool	1

AirWave Digital Assemblies & Modules

PR&E #	Description or Use	PR&E #	Description or Use
23-1	Electret microphone	99-960	Timer Control module
23-2	Cue speaker	99-961	Microphone preamp module
80-1551	Blank Panel (one module space)	99-965-1	Monitor module
95-895-1	Clock/timer Assembly (12 hour)	99-966	Analog Remote Line Selector module
95-895-2	Clock/timer Assembly (24 hour)	99-1001	Analog Input SIM
95-968-2	Timer Control switchboard	99-1002	Digital Input SIM
95-968-4	Mon 2 & RLS switchboard	99-1003	B Logic Interface SIM
95-968-6	Output Assignment switchboard	99-1004	Line Input module
95-968-7	Line Input switchboard	99-1005	Telco Input/Output module
95-968-8	Telco switchboard	99-1006	Output Amplifier module
95-969-1	On/Off switchboard	99-1010-1	Left DSP Card
95-969-2	Talkback switchboard	99-1010-2	Middle DSP Card (AWD-20 only)
95-974	Motherboard Interconnect	99-1010-3	Right DSP Card
95-1007	Left-end Motherboard	99-1012	Digital Remote Line Selector module
95-1008	Mid-Motherboard (AirWave Digital-20 only)	99-1014	Extender Card
95-1009	Right-end Motherboard (with power cable)	99-1015	Power Supply Assembly
95-1011	Bargraph Meter assy.		

Module Servicing

Input modules can be removed and installed with the console powered and on-air without causing audio interruption or noises in the program audio. When first plugged in, or when the console is first turned on, Input modules come up in their default turn-on state—no bus assignments active, the module in the Off state.

Note: Prior to removing any module from the motherboard, turn off all bus assignments and unplug all input, output and logic cables.

Line Input Module Component Parts

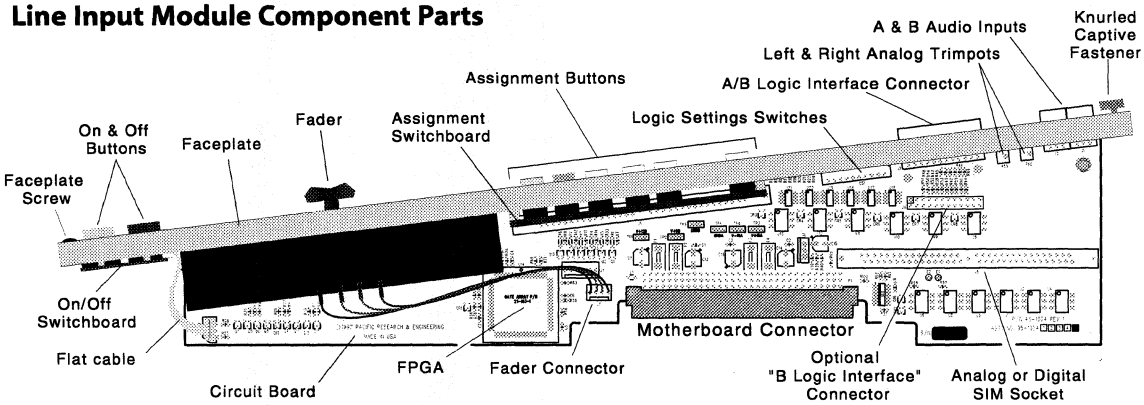

To remove a module from the mainframe:

1. Loosen the knurled captive fastener at the top of the module.
2. Remove the 4-40 button head faceplate screw at the bottom of the module. The AirWave Digital Tool kit includes the hex driver.
3. Use the knurled captive fastener to unplug the module from the motherboard and remove it from the mainframe.

To install a module:

1. Set the module's faceplate on the front chassis module mounting tab.
2. Lower the module into the mainframe and align the module's connector with the motherboard connector.
3. Once the connectors start to mate, press straight down on the module's faceplate above the motherboard connector area to seat the module. Do not press on buttons or connectors while seating the module.

MODULE DISASSEMBLY & REASSEMBLY

A module consists of a faceplate (the silk-screened metal panel) and a circuit board. There are two circuit boards on the double-width Monitor module. There may also be one or more switchboards and a fader, as on the Input and Telco modules, or several potentiometers, as on the Monitor module, plugged into the circuit board.

Circuit boards fasten to the faceplate using flat head Phillips screws. Faders fasten to the faceplate using 1/16 inch button head screws and plug into a circuit board connector. Pots mount to the faceplate using lock washers and nuts and plug into circuit board connectors. The On and Off switches mount on the On/Off switchboard. The Talkback switch mounts on the Talkback switchboard. Both of these switchboards use a flat cable and circuit board connectors. The Assignment switchboards and the Input module SIM (Single In-line Module) mount in SIM sockets on the circuit board.

Circuit Board Removal

To remove the circuit board from the faceplate:

1. Unplug all faders, pots and switchboards, as applicable.
2. Remove the Assignment switchboard support screws.
3. Remove the circuit board mounting screws.
4. Separate the circuit board from the faceplate.

Reassemble in reverse fashion, ensuring that the switchboard buttons and connectors protrude through the faceplate without binding.

SIM Circuit Card Removal

1. If necessary, remove the circuit board from the faceplate per the previous instructions.
2. Using antistatic material, set the circuit board trace side down.
3. Press out on the two metal switchboard locking clips while lightly pressing on the bottom of the circuit card. The board tilts out of the locking clips toward the switch or component side.
4. Lift and remove the SIM card from the SIM socket.

SIM Circuit Card Installation

1. Using antistatic material, set the circuit board trace side down.
2. Insert the SIM card with the edge contacts inserted into the SIM socket at about a 45° angle, with the switches/components angled down. The board is keyed so it will only mount in the correct orientation.
3. Press the circuit card into the socket while moving it to a vertical position. The locking clips will snap and hold the board in place.

When correctly positioned, the circuit card will be vertical to the circuit board and the two SIM socket alignment tabs will be set into matching holes on the SIM card.

On/Off or Talkback Switchboard Removal

1. Remove the circuit board from the faceplate, per previous instructions.
2. Remove the #1 Phillips screws, lock washers and washers from the switchboard to remove it from the faceplate. There are two screws on the Talkback switchboard and four screws on the On/Off switchboard.
3. Unplug the flat wire cable from the switchboard connector. Note its orientation.

Optional "B" Logic Interface Installation

1. Using antistatic material, set the module with its circuit board trace side down.
2. Position the "B" Logic card's 24-pin logic connector into the faceplate opening at an angle in order to insert the card's P1 connector into the circuit board connector pins. When properly mounted, the two 24-pin logic connectors will be physically aligned.

MONITOR MODULE

The Monitor module has two circuit boards on one faceplate. Prior to removing the Monitor module, unplug the headphones from the module and turn off the external amplifiers for the Control Room and Studio monitors and headphones. This prevents possible transient noise damage to the loudspeakers and headphones.

The Monitor 1 circuit board must be removed in order to remove the Monitor 2 circuit board. All of the faceplate components—pots, headphone jack, Talkback mic, and the Monitor 2 circuit board, plug into the Monitor 1 board.

AirWave uses sealed pots that do not require "cleaning." If it becomes necessary to replace a pot, remove the Monitor 1 circuit board from the faceplate by unplugging all cabling and removing the three mounting screws. Remove the colored end cap from the knob by prying it loose. Use the 70-44 Sifam Knob Removal Tool to loosen the lock

nut so the knob can removed from the pot shaft. Use a 7/16 inch nutdriver to remove the shaft nuts.

FADER SERVICING

There are no replaceable nor rebuildable parts on the AirWave Digital fader assembly. Fader service is comprised of cleaning and lubricating. All faders are conductive plastic, single-element faders (PR&E # 90-1016) .

If the fader movement is rough, either the lubricant on the glide rails has evaporated or foreign material has gotten into the fader. Dow Corning 510 is the preferred glide rail lubricant as it will not migrate to the contact fingers like other lubricating oils.

Fader Disassembly and Cleaning

1. Remove the module from the mainframe.
2. Remove the circuit board from the faceplate, per previous instructions.
3. Remove the fader knob and the two fader mounting screws, and then the fader from the faceplate.
4. Remove the snap-on fader assembly cover. It is held in place by round stamped bosses at each end. With the fader sitting label up and the connector pins to the front, a pry-point is on the right end of the fader cover.
5. Clean the fader using only a dry cotton swab, or a cotton swab wet with distilled water.

Note: The use of chemical cleaners on the conductive plastic will substantially shorten fader life. Never touch the fader slider contact fingers while cleaning the fader parts.

Use only a dry cotton swab, or a cotton swab wet with distilled water, to clean the fader parts. Always use a clean dry swab to dry off the conductive plastic tracks after cleaning. If the fader rails are noticeably dirty, wipe them off using a dry cotton swab before lightly lubricating the top rail with Dow Corning 510.

If coffee, a soft drink or other sugared liquid has been spilled into the fader, remove it from the module as soon as possible and remove the top cover of the fader. Hold the fader under hot running water while moving the fader slider back and forth to dissolve the sugars and other chemicals. Thoroughly dry the rails and conductive plastic using dry cotton swabs and then lubricate the top fader rail with Dow Corning 510.

Lubricating the Glide Rail

Move the fader slider to the middle of its travel and place one drop of Dow Corning 510 lubricant on the top rail on either side of the fader slider bushings. Move the slider through its full travel to distribute the lubricant. Wipe off any excess lubricant from the rubber stops at each end of the glide rail. Normally only the top rail (the one the fader slider bushings glide on) requires lubricant.

MICROPHONE PREAMP MODULE

The microphone trimpots are under a faceplate security cover. They are set at the factory for a +4 dBu output level with a -55 dBu, 1 kHz input. In the field, each trimpot can be adjusted for the specific microphone being used on that preamplifier.

ANALOG LINE INPUT MODULE

The Trim L and Trim R trimpots (R60 and R59) set the left and right channel gain, respectively. To adjust these trimpots:

1. Set the fader at the -12 dB (nominal) mark and assign the module to Program 1.
2. Apply a 1 kHz signal at the nominal input level for that channel (from -10 dBu up to +4 dBu) to the left and right input connectors. Either the A or B input can be used, as the adjustment point is after the A/B switch.
3. Using the Program 1 bargraph meters, adjust the trimpots for 0VU (or -8 PPM).

TELCO INPUT/OUTPUT MODULE

There is one trimpot adjustment on the Telco module. The trimpot (RV1) is used to set the input level from the hybrid (-10 to +4 dBu) so that a nominal +4 dBu output is available at the left To Tape output connector. To set RV1:

1. Connect a 1 kHz signal to the From Hybrid connector using the hybrid's output level.
2. Monitor the To Tape Left output.
3. Adjust RV1 for a +4 dBu output.

OUTPUT MODULE

To access the Output module analog level trimpots, the module must be placed on an extender card (PR&E # 99-1014). There are seven trimpots to adjust the analog signal output levels. There are no adjustments for the digital outputs or for the bargraph meters.

Before adjusting the program output levels, the meter selector DIP switch (DS1, switch 2) must be set to VU and one Input module must first be set up as a "standard" so that a known input level is feeding the Output module amplifiers. To set up an Input module as a standard:

1. Connect an analog +4 dBu, 1 kHz balanced signal to the left and right inputs on the A Input.
2. Set the fader to the nominal -12 dB mark. Select A Input and assign the module to all three program buses.
3. Adjust Trim L and Trim R for 0VU dBu indications on the Program 1 left and right meters.

Do not change the standard module settings until after the Output module adjustments are completed. To set the Output module:

1. Place the Output module on an extender card.
2. Turn off all other Input and Telco modules, leaving only the "standard" Input module On, feeding all three program buses with the 1 kHz input at nominal level.
3. Plug an AC Voltmeter into the analog Pgm-1 left output. Adjust RV3 for +4 dBu. Move the AC Voltmeter to the analog Pgm-1 right output. Adjust RV2 for +4 dBu.
4. Move the AC Voltmeter to the analog Pgm-2 left output. Adjust RV4 for +4 dBu. Move the AC Voltmeter to the analog Pgm-2 right output. Adjust RV5 for +4 dBu.
5. Move the AC Voltmeter to the analog Pgm-3 left output. Adjust RV6 for +4 dBu. Move the AC Voltmeter to the analog Pgm-3 right output. Adjust RV7 for +4 dBu.
6. Select Pgm-1 for the Monaural Output. Move the AC Voltmeter to pins 1, 2 and 3 of the Mono output connector. Adjust RV1 for +4 dBu.

MONITOR MODULE

The only trimpot (RV1) on the Monitor 1 circuit board sets the built-in Talkback microphone's output level. It is adjusted through the front panel. There are no adjustments on the Monitor 2 board.

CLOCK/TIMER ASSEMBLY

There is one frequency adjustment (C2) on the board. Allow at least one hour of powered operation to stabilize the internal oscillator before adjusting the frequency. To adjust the master clock oscillator, monitor the CLK test point using a x10 probe with a high-frequency counter. Adjust C2 for exactly 3.276800 MHz.

Clock/Timer Troubleshooting

Red LED flashing below clock: Clock set for Slave mode without ESE time code on J3. Change switch S1, #1 from Off to On if ESE is not being used. Test ESE system if time code is feeding J3.

No Clock nor Timer display: Check for +12 volts on J1 or J2, pin 5. Check for +8 volts at the output of U5 and for +5 volts on U4. Check for clock signal at CLK.

Clock Frozen: U8 shorted.

Clock rapidly incrementing: U6 shorted.

Clock runs very fast: U7 shorted.

Timer doesn't work in manual mode: Shorted Reset or Hold switch or open Start switch.

Timer doesn't work in Auto mode: Auto switch not turned on. Timer Reset switches on the Input modules are not set On or not set for the selected input (A or B).

One or more segments out: Each numeric character is an identical independent seven-segment display in a socket, so substitution can identify if the display or the driver is defective.

Note: Some of the seven-segment displays are mounted upside down to form the upper dot in the H:M:S divider colons.

TIMER CONTROL MODULE

The Keep Alive voltage is generated by two Lithium AA batteries on the Timer Control Panel. These batteries power the gate arrays during power outages so the console powers back up in the same state it was in when power was lost. There are no adjustments or DIP switches on this board.

CUE SPEAKER REPLACEMENT

The Cue speaker is 45 ohms/3 watts. To test the speaker, remove the speaker leads and check the impedance. To replace the speaker, remove the four mounting nuts, lock washers and washers from the speaker. The speaker must be angled on its mounting screws to clear the meter panel.

AIRWAVE UNIVERSAL POWER SUPPLY

Periodically check that the vent openings on the top of the chassis are not blocked and that there is no dust buildup on the heat sink fins.

Caution: *To reduce the risk of electric shock, perform no servicing other than the fuse replacement unless you are qualified to do so. Refer servicing to qualified service personnel.*

Fuse Replacement

The AC line fuse in the power entry module (PEM) is the only user-replaceable component in the supply. To access the fuse, unplug the AC cord and use flatblade screwdriver to pop the top of the PEM coverplate.

115 VAC supplies use a 2.50 amp slo-blo UL-type fuse. 230 VAC supplies use a 1.25 amp slo-blo IEC-approved fuse. Verify the correct AC mains voltage appears in the PEM cutout after the coverplate is snapped back into place.

If the fuse blows again, switch off the power supply, unplug the console DC cable and replace the fuse. If this fuse blows, a serious problem is indicated within the power supply. If the fuse does not blow, a problem likely exists in the mainframe. In either case, refer servicing to qualified service personnel.

Molex Power Supply Connector

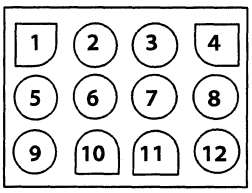

PIN	SIGNAL	WIRE COLOR
1	+45 V, phantom	Green/Black
2	+16 V, audio	Red
3	Phantom GND	Green
4	Audio GND	Black
5	Audio GND	White
6	-16 V, audio	White/Black
7	+12 V, Lamps	Red/Black
8	+5 V, Logic	Orange
9	Logic GND	Blue
10	No Connection	
11	No Connection	
12	No Connection	

Refer to the AirWave Universal Power Supply manual (PR&E 75-41) for servicing information.

Drawings & Schematics

6

Mainframe Wiring 2

AirWave Digital Block Diagram 3

Mic Preamp Module (92-961) ..... 4 - 6

Input Module (92-1004) ..... 7 - 8

Telco Input/Output Module (92-1005) ..... 9 - 10

Output Module (92-1006) ..... 11 - 16

Monitor Module,
- Monitor 1 PCA (92-964) ..... 17 - 20
- Monitor 2 PCA (92-965) ..... 21 - 25

Remote Line Selectors
- Analog RLS PCA (92-965) ..... 21 - 25
- Digital RLS PCA (92-1012) ..... 26 - 27

SIM Cards & Plug-In Assemblies
- On/Off/Talk Switchboard (92-969) 28
- Assignment Switchboard (92-968) 29
- Analog SIM (92-1001) 30
- Digital SIM (92-1002) 31
- "B" Input Logic Interface (92-1003) 32

Clock/Timer
- Clock/Timer Assembly (92-895) 33
- Timer Control Panel (92-960) 34

Bargraph Meter (92-1011) ..... 35 - 36

Motherboard Signals (92-1007, 92-1008, 92-1009) 37- 42

Power Supply
- Assembly, Wiring (92-1015) 43
- Regulator Board (92-955-3) 44

Note: The analog supply voltages on all modules used in the AirWave Digital console are ±16 VDC. On those modules also used in AirWave consoles, the schematics list these voltages as ±18 VDC. The phantom supply voltage in AirWave Digital is +45 VDC even though it may be listed as +48 VDC on some schematics.

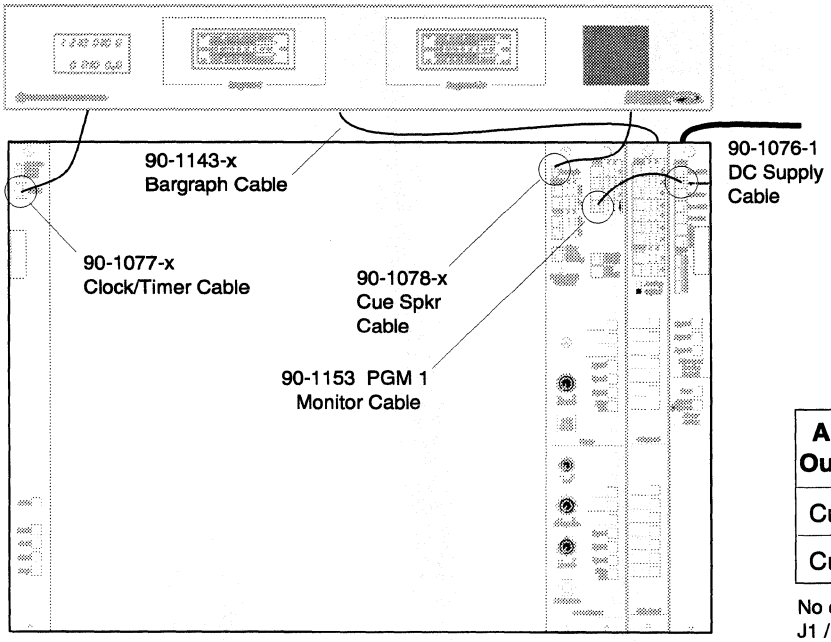

Cable Identification

Cable Part Numbers	
AWD-12	**AWD-20**
90-1076-1	90-1076-1
90-1077-1	90-1077-2
90-1078-1	90-1078-2
90-1143-1	90-1143-2
90-1153	90-1153

90-1078-x, Cue Speaker Cable

AirWave Cue Output Signals	P1 Pin	Wire Color	Cue Speaker	
Cue + Output	3	RED	J1	Spkr +
Cue - Output	2	GRN	J2	Spkr -

No connection: P1, pin 1
J1 / J2: Solderless crimp connectors

90-1077-x, Clock/Timer Cable

AirWave Timer Logic Functions	P1 Pin	Wire Color	P2 Pin
Logic Ground	1	BLU / BLK	6
+12 volts	2	GRN / BLK	5
Start Command	3	RED / BLK	4
Stop Command	4	WHT / BLK	3
Reset Command	5	VIO	2
Hold Command	6	GRY	1

No connection: P1, pins 7, 8

90-1143-x, Bargraph Meter Cable

AirWave Meter Output	P1&P2 Pin	Wire Color
+5 Volts	1	RED
+5 Volts	2	ORG
Logic ground	3	BLK
Logic ground	4	DRAIN / No stripe
Logic ground	5	DRAIN / stripe
Serial data 1	6	RED / no stripe
Serial data 2	7	RED / stripe
VU/PPM select	8	WHT
PGM2/3 select	9	GRN
System reset	10	BLU

90-1076-x, DC Power Supply Cable

AirWave Power Supply	P1 Pin	Wire Color	Motherboard Connections
+45 V (Phantom)	1	GRN / BLK	E3
+16 V (analog)	2	RED	E4
Phantom Gnd	3	GRN	J1
Audio Gnd	4	BLK	E1
Audio Gnd	5	WHT	E2
-16 V (analog)	6	WHT / BLK	E5
+12 V (lamps)	7	RED / BLK	E8
+5 V (digital)	8	ORG	E7
Digital/Lamp Gnd	9	BLU	E6

No connection: P1, pins 10, 11, 12
E1 - E8: Circuit board eyelets
J1: Ground lug fastened to Motherboard screw

90-1153, Pgm 1 Monitor Cable

Program 1 Monitor	P1 & P2 Pin	Wire Color
Pgm 1L shield	1	GND
Pgm 1L (-)	2	BLK
Pgm 1L (+)	3	RED
Pgm 1R shield	4	GND / RED STRIPE
Pgm 1R (-)	5	BLK / RED STRIPE
Pgm 1R (+)	6	RED / RED STRIPE

AIRWAVE DIGITAL CONSOLE WIRING

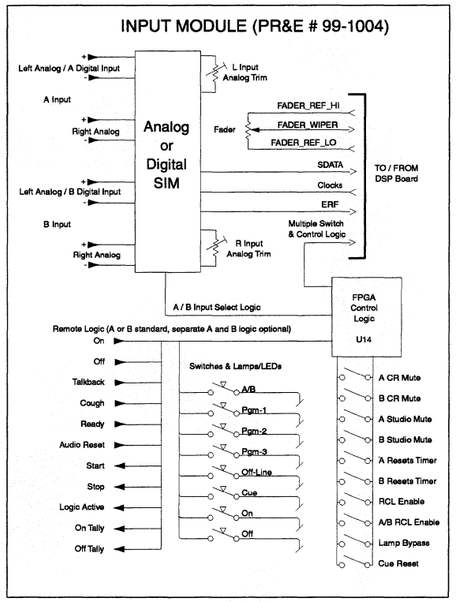
INPUT MODULE (PR&E # 99-1004)
Left Analog / A Digital Input
L Input Analog Trim
A Input
Right Analog
Analog or Digital SIM
Fader
FADER_REF_HI
FADER_WIPER
FADER_REF_LO
SDATA
Clocks
ERF
TO / FROM DSP Board
Left Analog / B Digital Input
B Input
Right Analog
R Input Analog Trim
Multiple Switch & Control Logic
FPGA Control Logic
U14
A / B Input Select Logic
Remote Logic (A or B standard, separate A and B logic optional)
On
Off
Talkback
Cough
Ready
Audio Reset
Start
Stop
Logic Active
On Tally
Off Tally
Switches & Lamps/LEDs
A/B
Pgm-1
Pgm-2
Pgm-3
Off-Line
Cue
On
Off
A CR Mute
B CR Mute
A Studio Mute
B Studio Mute
A Resets Timer
B Resets Timer
RCL Enable
A/B RCL Enable
Lamp Bypass
Cue Reset

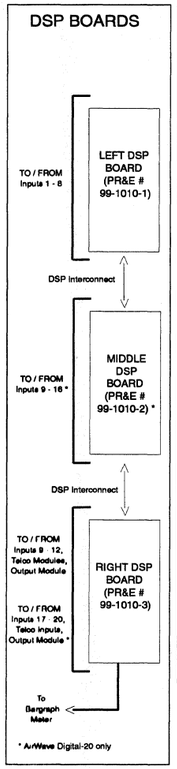
DSP BOARDS
TO / FROM Inputs 1 - 8
LEFT DSP BOARD (PR&E # 99-1010-1)
DSP Interconnect
TO / FROM Inputs 9 - 16 *
MIDDLE DSP BOARD (PR&E # 99-1010-2) *
DSP Interconnect
TO / FROM Inputs 9 - 12, Telco Modules, Output Module
TO / FROM Inputs 17 - 20, Telco Inputs, Output Module *
RIGHT DSP BOARD (PR&E # 99-1010-3)
To Bargraph Meter
* AirWave Digital-20 only

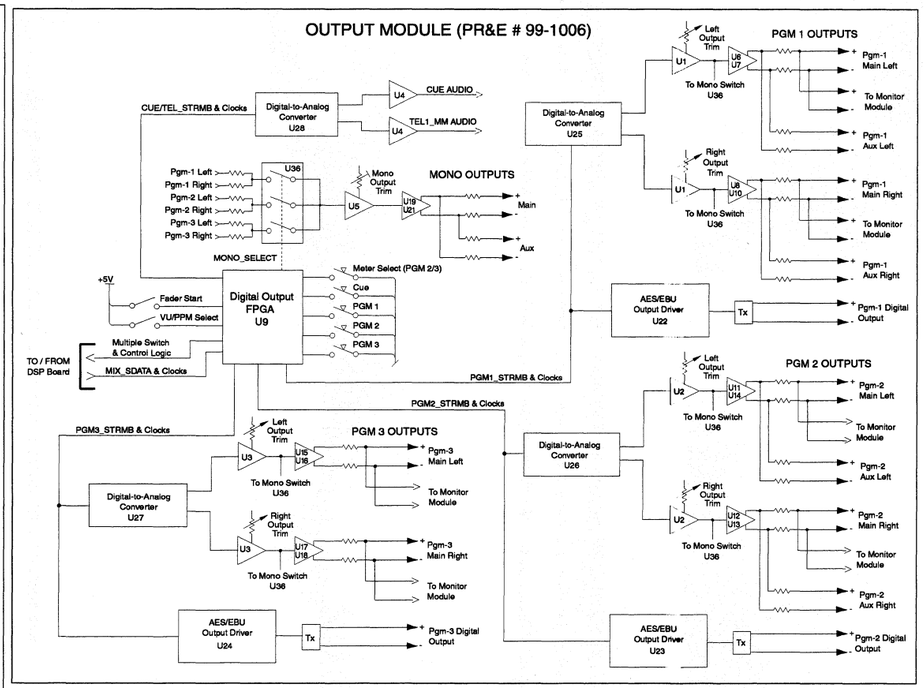
OUTPUT MODULE (PR&E # 99-1006)
CUE/TEL_STRMB & Clocks
Digital-to-Analog Converter U28
CUE AUDIO
TEL1_MM AUDIO
Pgm-1 Left
Pgm-1 Right
Pgm-2 Left
Pgm-2 Right
Pgm-3 Left
Pgm-3 Right
MONO_SELECT
Mono Output Trim
MONO OUTPUTS
Main
Aux
Meter Select (PGM 2/3)
Cue
PGM 1
PGM 2
PGM 3
+5V
Fader Start
VU/PPM Select
Multiple Switch & Control Logic
TO / FROM DSP Board
MIX_SDATA & Clocks
Digital Output FPGA U9
PGM1_STRMB & Clocks
PGM2_STRMB & Clocks
PGM3_STRMB & Clocks
Digital-to-Analog Converter U25
Digital-to-Analog Converter U26
Digital-to-Analog Converter U27
PGM 1 OUTPUTS
PGM 2 OUTPUTS
PGM 3 OUTPUTS
Left Output Trim
Right Output Trim
To Mono Switch U36
To Monitor Module
Pgm-1 Main Left
Pgm-1 Main Right
Pgm-1 Aux Left
Pgm-1 Aux Right
Pgm-2 Main Left
Pgm-2 Main Right
Pgm-2 Aux Left
Pgm-2 Aux Right
Pgm-3 Main Left
Pgm-3 Main Right
Pgm-3 Aux Left
Pgm-3 Aux Right
AES/EBU Output Driver U22
AES/EBU Output Driver U23
AES/EBU Output Driver U24
Tx
Pgm-1 Digital Output
Pgm-2 Digital Output
Pgm-3 Digital Output

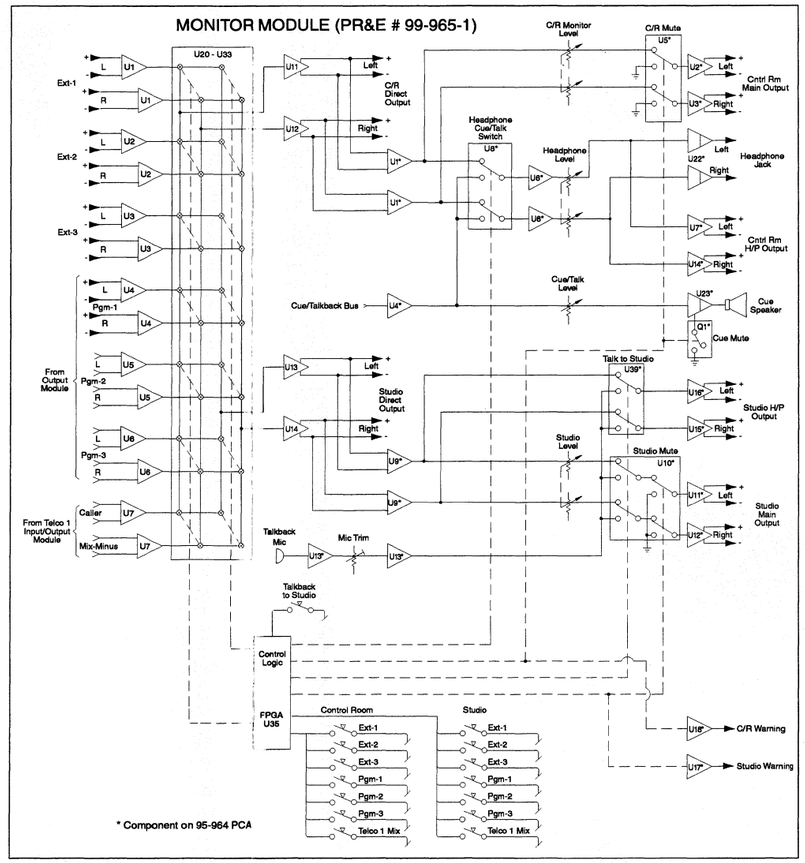
MONITOR MODULE (PR&E # 99-965-1)
U20 - U33
Ext-1
Ext-2
Ext-3
Pgm-1
Pgm-2
Pgm-3
C/R Direct Output
C/R Monitor Level
C/R Mute
Cntrl Rm Main Output
Headphone Cue/Talk Switch
Headphone Level
Headphone Jack
Cntrl Rm H/P Output
Cue/Talk Level
Cue/Talkback Bus
Cue Speaker
Cue Mute
From Output Module
Studio Direct Output
Talk to Studio
Studio H/P Output
Studio Level
Studio Mute
Studio Main Output
From Telco 1 Input/Output Module
Caller
Mix-Minus
Talkback Mic
Mic Trim
Talkback to Studio
Control Logic
FPGA U35
Control Room
Studio
Telco 1 Mix
C/R Warning
Studio Warning
* Component on 95-964 PCA

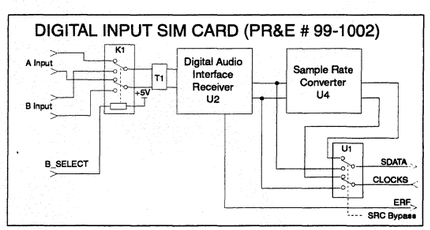
ANALOG INPUT SIM CARD (PR&E # 99-1001)
A/B Select
U3
To Trimpot
From Trimpot
A Input
B Input
Left
Right
Analog-Digital Converter U5
SDATA
Clocks
A/B_SELECT
B_SELECT

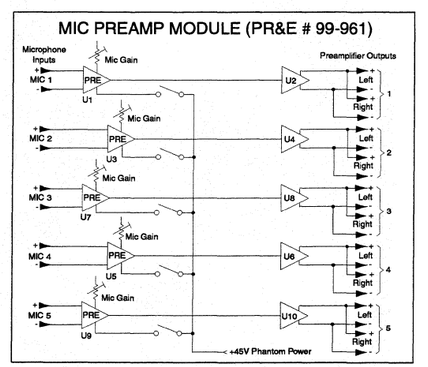
DIGITAL INPUT SIM CARD (PR&E # 99-1002)
A Input
B Input
K1
T1
+5V
Digital Audio Interface Receiver U2
Sample Rate Converter U4
U1
B_SELECT
SDATA
CLOCKS
ERF
SRC Bypass

MIC PREAMP MODULE (PR&E # 99-961)
Microphone Inputs
Mic Gain
Preamplifier Outputs
MIC 1
MIC 2
MIC 3
MIC 4
MIC 5
PRE
Left
Right
+48V Phantom Power

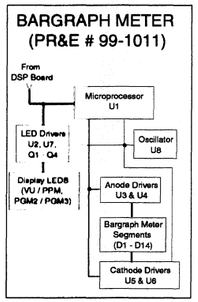
BARGRAPH METER (PR&E # 99-1011)
From DSP Board
Microprocessor U1
LED Drivers U2, U7, Q1 - Q4
Oscillator U8
Display LEDS (VU / PPM, PGM2 / PGM3)
Anode Drivers U3 & U4
Bargraph Meter Segments (D1 - D14)
Cathode Drivers U5 & U6

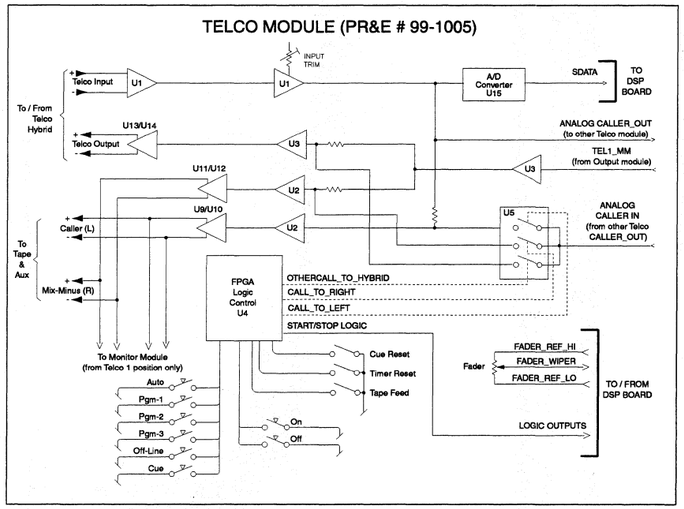
TELCO MODULE (PR&E # 99-1005)
Telco Input
INPUT TRIM
A/D Converter U15
SDATA
TO DSP BOARD
To / From Telco Hybrid
Telco Output
U13/U14
ANALOG CALLER_OUT (to other Telco module)
TEL1_MM (from Output module)
U11/U12
U9/U10
Caller (L)
Mix-Minus (R)
To Tape & Aux
ANALOG CALLER IN (from other Telco CALLER_OUT)
FPGA Logic Control U4
OTHERCALL_TO_HYBRID
CALL_TO_RIGHT
CALL_TO_LEFT
START/STOP LOGIC
To Monitor Module (from Telco 1 position only)
Auto
Pgm-1
Pgm-2
Pgm-3
Off-Line
Cue
On
Off
Cue Reset
Timer Reset
Tape Feed
Fader
FADER_REF_HI
FADER_WIPER
FADER_REF_LO
TO / FROM DSP BOARD
LOGIC OUTPUTS

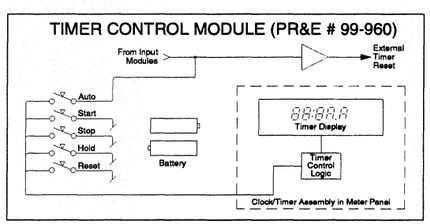
TIMER CONTROL MODULE (PR&E # 99-960)
From Input Modules
External Timer Reset
Auto
Start
Stop
Hold
Reset
Battery
Timer Display
Timer Control Logic
Clock/Timer Assembly in Meter Panel

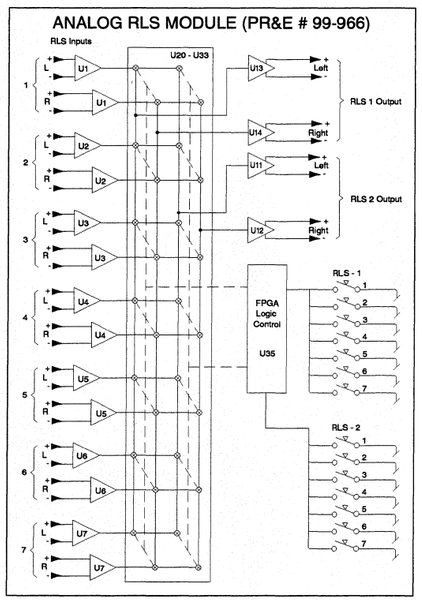
ANALOG RLS MODULE (PR&E # 99-966)
RLS Inputs
U20 - U33
RLS 1 Output
RLS 2 Output
FPGA Logic Control U35
RLS - 1
RLS - 2

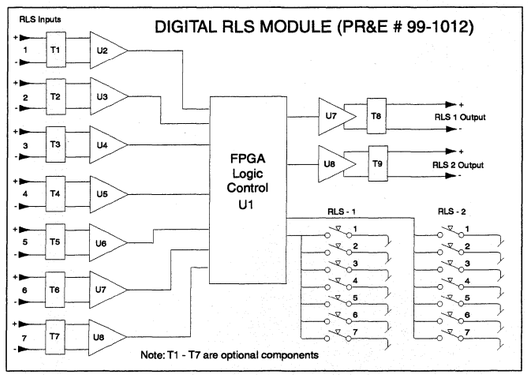
DIGITAL RLS MODULE (PR&E # 99-1012)
RLS Inputs
FPGA Logic Control U1
RLS 1 Output
RLS 2 Output
RLS - 1
RLS - 2
Note: T1 - T7 are optional components

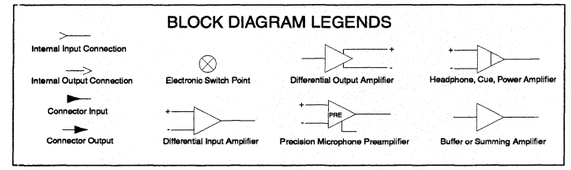
BLOCK DIAGRAM LEGENDS
Internal Input Connection
Internal Output Connection
Connector Input
Connector Output
Electronic Switch Point
Differential Input Amplifier
Differential Output Amplifier
Precision Microphone Preamplifier
Headphone, Cue, Power Amplifier
Buffer or Summing Amplifier

REVISIONS				
REV	ECO #	DESCRIPTION	DATE	APPROVAL
B	tbe	J3<>J4 , J2<>J5, & Phantom swap	3/10/97	T. Steros

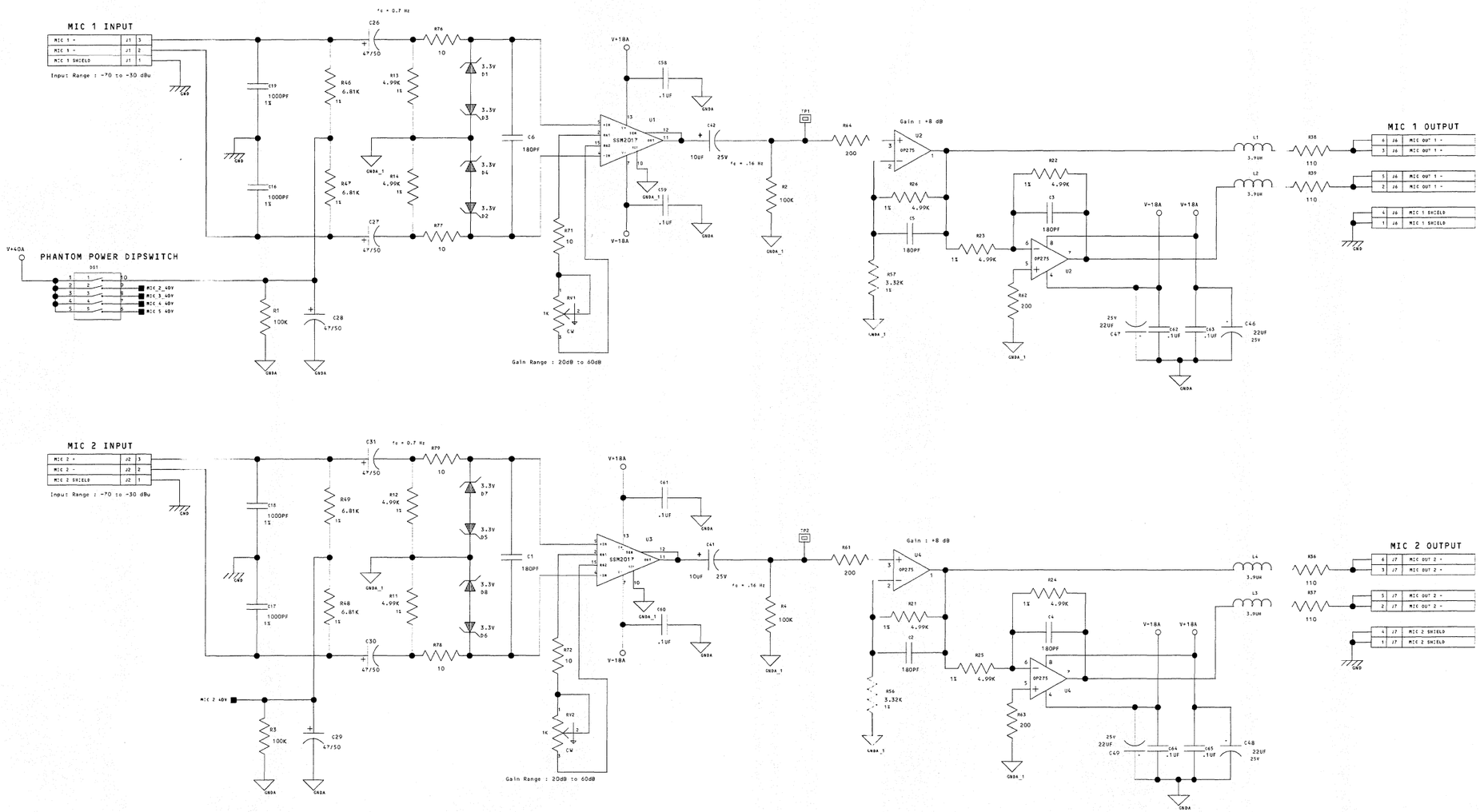

APPROVALS	DATE
J DOMBROWKSI	2/24/97

PACIFIC RESEARCH & ENGINEERING CORPORATION

SCHEMATIC

MIC PRE BOARD

SIZE	DRAWING NUMBER	REV
D	92-961	B

USED ON AirWave

3-10-1997_14:30

SHEET 1 OF 3

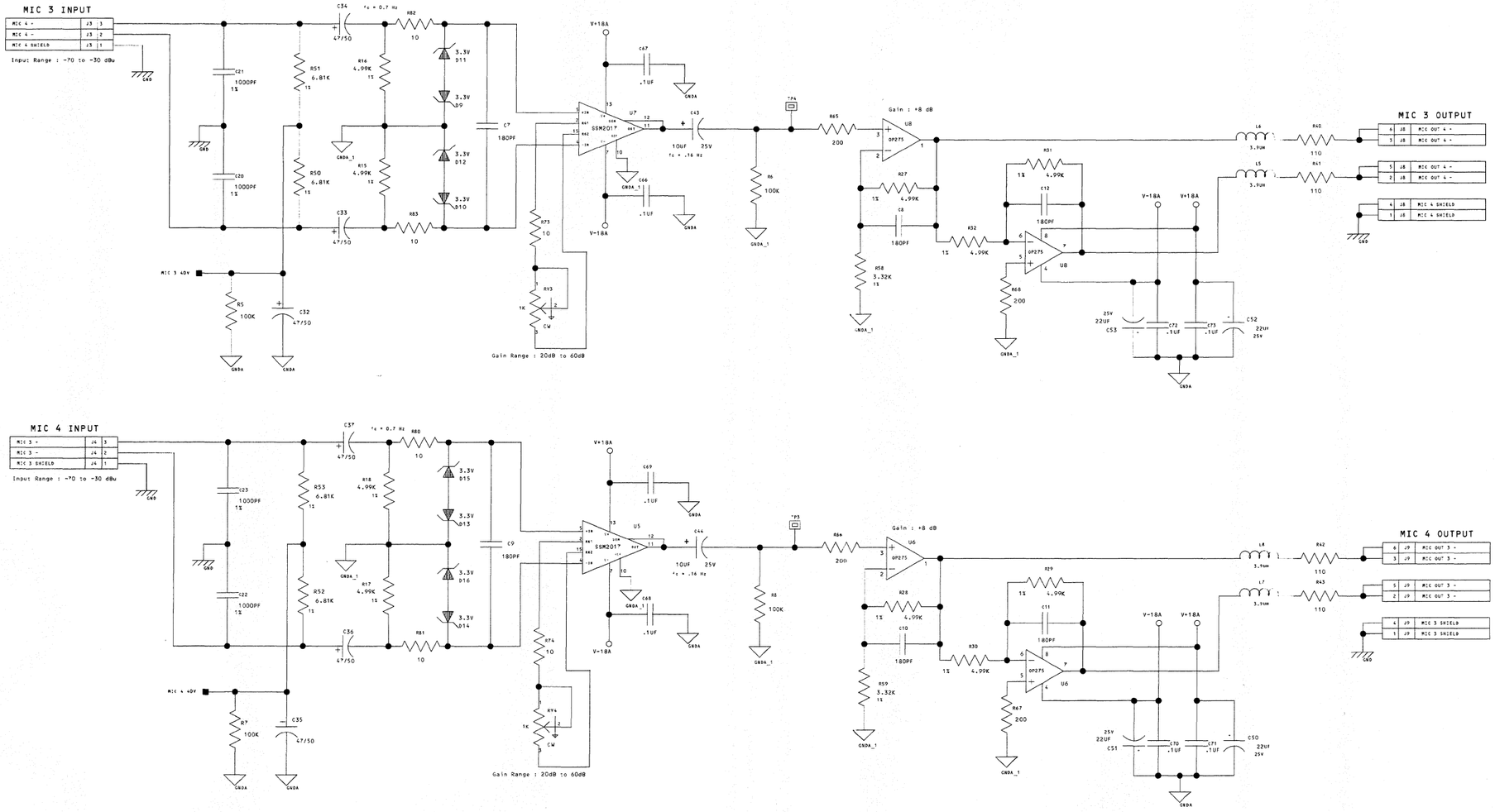

PACIFIC RESEARCH & ENGINEERING CORPORATION

SIZE	DRAWING NUMBER	REV
D	92-961	B
3-10-1997_15:37	SHEET 2 OF 3	

DIN CONNECTOR

PGM1 MAIN L	P1	1	NC
PGM1 TELCO L	P1	2	NC
PGM2 MAIN L	P1	3	NC
PGM2 TELCO L	P1	4	NC
O/L SUM BUS	P1	5	NC
AUDIO GND	P1	6	
AUDIO GND	P1	7	
AUDIO GND	P1	8	
AUDIO GND	P1	9	
+48V PHANTOM	P1	10	
+18V AUDIO	P1	11	
+18V AUDIO	P1	12	
-18V AUDIO	P1	13	
-18V AUDIO	P1	14	
PGM1/TELCO L	P1	15	NC
PGM2/TELCO L	P1	16	NC
	P1	17	NC
	P1	18	NC
	P1	19	NC
	P1	20	NC
	P1	21	NC
	P1	22	NC
LOGIC GND	P1	23	NC
LOGIC GND	P1	24	NC
LOGIC GND	P1	25	NC
+5V LOGIC	P1	26	NC
+5V LOGIC	P1	27	NC
+5V LOGIC	P1	28	NC
+12V LAMP	P1	29	NC
KEEP ALIVE	P1	30	NC
CR WARNING	P1	31	NC
ST WARNING	P1	32	NC
	P1	33	NC
	P1	34	NC
	P1	35	NC
	P1	36	NC
	P1	37	NC
AUDIO GND	P1	38	
AUDIO GND	P1	39	
AUDIO GND	P1	40	
AUDIO GND	P1	41	
+48V PHANTOM	P1	42	
+18V AUDIO	P1	43	
+18V AUDIO	P1	44	
-18V AUDIO	P1	45	
-18V AUDIO	P1	46	
	P1	47	NC
	P1	48	NC
PGM1 OUT L -	P1	49	NC
PGM2 OUT L -	P1	50	NC
PGM1 OUT R -	P1	51	NC
PGM2 OUT R -	P1	52	NC
SEND/CALLER -	P1	53	NC
CALL AUDIO -	P1	54	NC
LOGIC GND	P1	55	NC
LOGIC GND	P1	56	NC
LOGIC GND	P1	57	NC
+5V LOGIC	P1	58	NC
+5V LOGIC	P1	59	NC
+5V LOGIC	P1	60	NC
+12V LAMP	P1	61	NC
TIMER RESET	P1	62	NC
CR MUTE BUS	P1	63	NC
ST MUTE BUS	P1	64	NC
PGM1 MAIN R	P1	65	NC
PGM1 TELCO R	P1	66	NC
PGM2 MAIN R	P1	67	NC
PGM2 TELCO R	P1	68	NC
CUE SUM BUS	P1	69	NC
AUDIO GND	P1	70	
AUDIO GND	P1	71	
AUDIO GND	P1	72	
AUDIO GND	P1	73	
+48V PHANTOM	P1	74	
+18V AUDIO	P1	75	
+18V AUDIO	P1	76	
-18V AUDIO	P1	77	
-18V AUDIO	P1	78	
PGM1/TELCO R	P1	79	NC
PGM2/TELCO R	P1	80	NC
PGM1 OUT L +	P1	81	NC
PGM2 OUT L +	P1	82	NC
PGM1 OUT R +	P1	83	NC
PGM2 OUT R +	P1	84	NC
SEND/CALLER +	P1	85	NC
CALL AUDIO +	P1	86	NC
LOGIC GND	P1	87	NC
LOGIC GND	P1	88	NC
LOGIC GND	P1	89	NC
+5V LOGIC	P1	90	NC
+5V LOGIC	P1	91	NC
+5V LOGIC	P1	92	NC
+12V LAMP	P1	93	NC
CUE/TALK CR	P1	94	NC
CR MIC O/L	P1	95	NC
ST MIC O/L	P1	96	NC

to MOTHER board

MIC 5 INPUT

MIC 5 +	J5	3
MIC 5 -	J5	2
MIC 5 SHIELD	J5	1

C38 47/50 fc = 0.7 Hz · R84 10 · C24 1000PF 1% · R54 6.81K 1% · R19 4.99K 1% · D18 3.3V · D20 3.3V · D17 3.3V · D19 3.3V · C14 180PF · C25 1000PF 1% · R55 6.81K 1% · R20 4.99K 1% · C39 47/50 · R85 10 · GND · GNDA_1

MIC_5_40V · R10 100K · C40 47/50 · GNDA

R75 10 · RV5 1K CW · Gain Range : 20dB to 60dB

V+18A · C75 .1UF · U9 SSM2017 · C76 .1UF · V-18A · C45 10UF 25V fc = .16 Hz · TP5 · R9 100K · GNDA_1

R69 200 · Gain : +8 dB · U10 OP275 · R33 4.99K 1% · C13 180PF · R60 3.32K 1% · GNDA_1

R35 4.99K 1% · R34 4.99K 1% · C15 180PF · U10 OP275 · R70 200 · GNDA_1

V-18A · V+18A · C54 22UF 25V · C78 .1UF · C77 .1UF · C55 22UF 25V · GNDA

L9 3.9UH · R45 110 · L10 3.9UH · R44 110

MIC 5 OUTPUT

6	J10	MIC OUT 5 +	
5	J10	MIC OUT 5 +	
5	J10	MIC OUT 5 -	
2	J10	MIC OUT 5 -	
4	J10	MIC 5 SHIELD	
1	J10	MIC 5 SHIELD	

GND

V+40A · TP8 · C79 .1UF · GNDA

V+18A · TP9 · F1 · C80 .1UF · C56 22UF 25V · GNDA

V-18A · TP6 · F2 · C74 .1UF · C57 25V 22UF · GNDA

PACIFIC RESEARCH & ENGINEERING CORPORATION		
SIZE D	DRAWING NUMBER 92-961	REV B
3-10-1997_15:37	SHEET 3 OF 3	

REVISIONS			
REV	ECO #	DESCRIPTION	DATE / APPROVAL
B	4356	U16-21 ADJ PIN TO 200 OHM RESISTOR	29JAN99 L. STANTON

DIN CONNECTOR

SERIAL DATA	P1	1	SDATA
SHIELD	P1	2	
FADER REFERENCE HIGH	P1	3	FADER_REF_HI
CUE_ON	P1	4	CUE_ON
PGM1 ON	P1	5	PGM1_SELECT
AUDIO GND	P1	6	
AUDIO GND	P1	7	
AUDIO GND	P1	8	
AUDIO GND	P1	9	
+48V PHANTOM	P1	10	NC
+16V AUDIO	P1	11	
+16V AUDIO	P1	12	
-16V AUDIO	P1	13	
-16V AUDIO	P1	14	
DSP GO	P1	15	NC
NC	P1	16	NC
NC	P1	17	NC
NC	P1	18	NC
NC	P1	19	NC
NC	P1	20	NC
NC	P1	21	NC
NC	P1	22	NC
LOGIC GND	P1	23	
LOGIC GND	P1	24	
LOGIC GND	P1	25	
+5V LOGIC	P1	26	POR_GND
+5V LOGIC	P1	27	
+5V LOGIC	P1	28	
+12V LAMP	P1	29	
KEEP ALIVE	P1	30	KEEP_ALIVE
CR WARNING	P1	31	CR_WARN_CTL
ST WARNING	P1	32	ST_WARN_CTL
256FS	P1	33	256FS
64FS	P1	34	64FS
FADER WIPER	P1	35	FADER_WIPER
O/L_ON	P1	36	O/L_SELECT
PGM2 ON	P1	37	PGM2_SELECT
AUDIO GND	P1	38	
AUDIO GND	P1	39	
AUDIO GND	P1	40	
AUDIO GND	P1	41	
+48V PHANTOM	P1	42	NC
+16V AUDIO	P1	43	
+16V AUDIO	P1	44	
-16V AUDIO	P1	45	
-16V AUDIO	P1	46	
*SYSTEM RESET	P1	47	SYSTEM_RESET
NC	P1	48	NC
NC	P1	49	NC
NC	P1	50	NC
NC	P1	51	NC
NC	P1	52	NC
NC	P1	53	NC
NC	P1	54	NC
LOGIC GND	P1	55	
LOGIC GND	P1	56	
LOGIC GND	P1	57	
+5V LOGIC	P1	58	
+5V LOGIC	P1	59	
+5V LOGIC	P1	60	
+12V LAMP	P1	61	
TIMER RESET	P1	62	TMR_RST_CTL
CR MUTE BUS	P1	63	CR_MUTE_CTL
ST MUTE BUS	P1	64	ST_MUTE_CTL
FS	P1	65	FS
SHIELD	P1	66	
FADER REFERENCE LOW	P1	67	FADER_REF_LO
FADER ON	P1	68	FADER_ON
PGM3 ON	P1	69	PGM3_SELECT
AUDIO GND	P1	70	
AUDIO GND	P1	71	
AUDIO GND	P1	72	
AUDIO GND	P1	73	
+48V PHANTOM	P1	74	NC
+16V AUDIO	P1	75	
+16V AUDIO	P1	76	
-16V AUDIO	P1	77	
-16V AUDIO	P1	78	
FADER START ENABLE	P1	79	FADER_START_EN
NC	P1	80	NC
NC	P1	81	NC
NC	P1	82	NC
NC	P1	83	NC
NC	P1	84	NC
NC	P1	85	NC
NC	P1	86	NC
LOGIC GND	P1	87	
LOGIC GND	P1	88	
LOGIC GND	P1	89	
+5V LOGIC	P1	90	
+5V LOGIC	P1	91	
+5V LOGIC	P1	92	
+12V LAMP	P1	93	
CUE/TALK CR	P1	94	CUE_CTL
CR MIC O/L	P1	95	CR_MIC_O/L
ST MIC O/L	P1	96	ST_MIC_O/L

Nominal Input Level = +4dBu

A INPUT L +	J1	3	1	J5	A_IN_L+
A INPUT L -	J1	2	2	J5	A_IN_L-
A INPUT L SHD	J1	1	3	J5	GUARD_AGND
			4	J5	GUARD_AGND
			5	J5	GUARD_AGND
A INPUT R +	J1	6	6	J5	A_IN_R+
A INPUT R -	J1	5	7	J5	A_IN_R-
A INPUT R SHD	J1	4	8	J5	GUARD_AGND
			9	J5	GUARD_AGND
			10	J5	GUARD_AGND
B INPUT L +	J2	3	11	J5	B_IN_L+
B INPUT L -	J2	2	12	J5	B_IN_L-
B INPUT L SHD	J2	1	13	J5	GUARD_AGND
			14	J5	GUARD_AGND
			15	J5	GUARD_AGND
B INPUT R +	J2	6	16	J5	B_IN_R+
B INPUT R -	J2	5	17	J5	B_IN_R-
B INPUT R SHD	J2	4	18	J5	GUARD_AGND
			19	J5	GUARD_AGND
			20	J5	GUARD_AGND
			21	J5	GUARD_AGND
			22	J5	GUARD_AGND
			23	J5	TO_TRIM_POT_L
			24	J5	GUARD_AGND
			25	J5	GUARD_AGND
			26	J5	TO_TRIM_POT_R
			27	J5	GUARD_AGND
			28	J5	GUARD_AGND
			29	J5	FROM_TRIM_POT_L
			30	J5	GUARD_AGND
			31	J5	GUARD_AGND
			32	J5	FROM_TRIM_POT_R
			33	J5	AGND
			34	J5	AGND
			35	J5	V+16A
			36	J5	V+16A
			37	J5	V-16A
			38	J5	V-16A
			39	J5	*RESET
			40	J5	*RESET
			41	J5	DGND
			42	J5	DGND
			43	J5	V+5D
			44	J5	V+5D
			45	J5	V+12D
			46	J5	V+12D
			47	J5	GUARD_DGND
			48	J5	GUARD_DGND
			49	J5	!256FS
			50	J5	GUARD_DGND
			51	J5	GUARD_DGND
			52	J5	FS
			53	J5	GUARD_DGND
			54	J5	GUARD_DGND
			55	J5	64FS
			56	J5	GUARD_DGND
			57	J5	GUARD_DGND
			58	J5	SDATA_SIM
			59	J5	GUARD_DGND
			60	J5	GUARD_DGND
A/B_SELECT			61	J5	A/B_SELECT
B_SELECT			62	J5	B_SELECT
			63	J5	NC
ERF			64	J5	ERF

CONNECTED TO MOUNTING HOLE

LOGIC DIPSWITCH DS1

A_CR_MUTE_DSW
B_CR_MUTE_DSW
A_ST_MUTE_DSW
B_ST_MUTE_DSW
A_TMR_RST_DSW
B_TMR_RST_DSW
RCL_ENABLE_DSW
A-B_RCL_SELECT_DSW
RDY_LAMP_BYPASS_DSW
CUE_RST_DSW

U14 ACT1010

TEST CONN (not installed)

1	J7	PROBE B
2	J7	PROBE A
3	J7	DCLK
4	J7	SDI
5	J7	MODE
6	J7	LOGIC GND

SIMM SOCKET

1	J6	CUE SWITCH
2	J6	CUE LED
3	J6	O/L SWITCH
4	J6	O/L LED
5	J6	PGM3 SWITCH
6	J6	PGM3 LED
7	J6	PGM2 SWITCH
8	J6	PGM2 LED
9	J6	PGM1 SWITCH
10	J6	PGM1 LED
NC	J6	
NC	J6	
13	J6	AB SWITCH
14	J6	AB LED
15	J6	+5V LOGIC
16	J6	+5V LOGIC
17	J6	LOGIC GND
18	J6	LOGIC GND
NC	J6	
NC	J6	
NC	J6

EXTERNAL LOGIC CONNECTOR

NC	J3	23
AUDIO RESET+	J3	22
AUDIO RESET-	J3	19
READY+	J3	24
READY-	J3	21
OPTO +V IN	J3	18
ON	J3	7
OFF	J3	8
COUGH	J3	9
EXT CR TLKBK	J3	20

CR3 1N4148 · R54 200 · U13 4N25S · U21 LM317LD
CR4 1N4148 · R49 200 · U12 4N25S · U20 LM317LD
CR5 1N4148 · R48 200 · U11 4N25S · U19 LM317LD
CR6 1N4148 · R47 200 · U10 4N25S · U18 LM317LD
CR7 1N4148 · R46 200 · U9 4N25S · U17 LM317LD
CR8 1N4148 · R45 200 · U8 4N25S · U16 LM317LD

~READY_DUAL	J4	19	R53 10K	READY
~RTN_OFF_DUAL	J4	21	R44 10K	RTN_OFF
~EXT_ON_DUAL	J4	7	R43 10K	EXT_ON
~EXT_OFF_DUAL	J4	8	R42 10K	EXT_OFF
~COUGH_DUAL	J4	9	R41 10K	COUGH
~EXT_CR_TLKBK_DUAL	J4	20	R55 10K	EXT_CR_TLKBK
~DUAL_LOGIC_KEY	J4	18	R58 10K	DUAL_LOGIC_KEY

V+5D

START_PULSE	R52 1K	5 J4 START_PULSE_DUAL	U4 AQV212 RELAY → 5 J3 START PULSE
STOP_PULSE	R51 1K	4 J4 STOP_PULSE_DUAL	U3 AQV212 RELAY → 4 J3 STOP PULSE; 13 J3 COMMAND COMMON
ON_LAMP	R50 1K	17 J4 ON_LAMP_DUAL	U1 AQV212 RELAY → 17 J3 ON TALLY
OFF_LAMP	R56 1K	16 J4 OFF_LAMP_DUAL	U5 AQV212 RELAY → 16 J3 OFF TALLY
	R57 1K		U2 AQV212 RELAY → 15 J3 LGC ACT TALLY; 14 J3 TALLY COMMON
	R59 1K		U6 AQV212 RELAY → 6 J3 +5 LOGIC; 10 J3 +5 LOGIC; 11 J3 +5 LOGIC; 12 J3 +5 LOGIC

CR2 1N4148

EXTERNAL LOGIC CONNECTOR

5	J3	START PULSE
4	J3	STOP PULSE
13	J3	COMMAND COMMON
17	J3	ON TALLY
16	J3	OFF TALLY
15	J3	LGC ACT TALLY
14	J3	TALLY COMMON
6	J3	+5 LOGIC
10	J3	+5 LOGIC
11	J3	+5 LOGIC
12	J3	+5 LOGIC
1	J3	LOGIC GND
2	J3	LOGIC GND
3	J3	LOGIC GND

U7 LM340T+5 (V+12D → VIN, VOUT → V+5 LOGIC_DUAL; GND → GNDD) · C10 · C15 22/25 · R60 10K · R61 10K

6	J4	V+5 LOGIC_DUAL
10	J4	V+5 LOGIC_DUAL
11	J4	V+5 LOGIC_DUAL
12	J4	V+5 LOGIC_DUAL
1	J4	LOGIC GND_DUAL
2	J4	LOGIC GND_DUAL
3	J4	LOGIC GND_DUAL

Q16 2N7002 (AB-SNGL_A-DUAL_EN → GNDD)

B-DUAL_EN → 15 J4 B-DUAL_EN

V+5D

22	J4	V+5D
23	J4	V+5D
24	J4	V+5D

13	J4	NC
14	J4	NC

PACIFIC RESEARCH & ENGINEERING CORPORATION

SIZE	DRAWING NUMBER	REV
D	92-1004	B
2-5-1999_14:09	SHEET 2 OF 2	

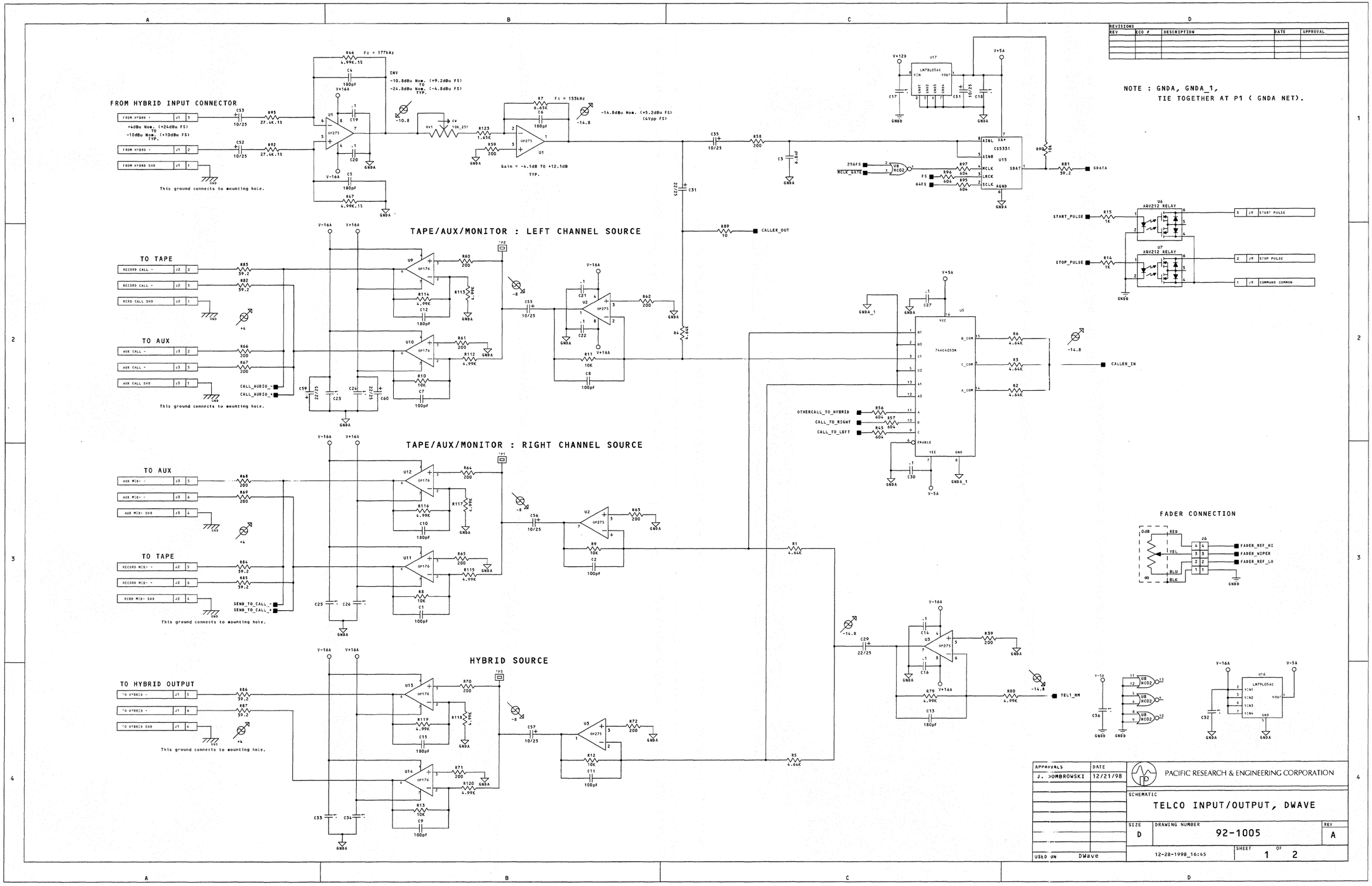

REVISIONS
REV
ECO #
DESCRIPTION
DATE
APPROVAL
NOTE : GNDA, GNDA_1,
TIE TOGETHER AT P1 (GNDA NET).
FROM HYBRID INPUT CONNECTOR
TAPE/AUX/MONITOR : LEFT CHANNEL SOURCE
TO TAPE
TO AUX
TAPE/AUX/MONITOR : RIGHT CHANNEL SOURCE
TO AUX
TO TAPE
HYBRID SOURCE
TO HYBRID OUTPUT
This ground connects to mounting hole.
FADER CONNECTION
START_PULSE
STOP_PULSE
CALLER_OUT
CALLER_IN
TEL1_MM
SDATA
APPROVALS
J. DOMBROWSKI
DATE
12/21/98
PACIFIC RESEARCH & ENGINEERING CORPORATION
SCHEMATIC
TELCO INPUT/OUTPUT, DWAVE
SIZE
D
DRAWING NUMBER
92-1005
REV
A
12-28-1998_16:45
SHEET
1
OF
2
USED ON
DWave

DIN CONNECTOR

SERIAL DATA	P1	1	SDATA
SYNC OUT	P1	2	SYNC_OUT
FADER REFERENCE HIGH	P1	3	FADER_REF_HI
CUE ON	P1	4	CUE_CTL
PGM1 ON	P1	5	PGM1_ON_CTL
AUDIO GND	P1	6	
AUDIO GND	P1	7	
AUDIO GND	P1	8	
AUDIO GND	P1	9	
+48V PHANTOM	P1	10	NC
+16V AUDIO	P1	11	
+16V AUDIO	P1	12	
+16V AUDIO	P1	13	
+16V AUDIO	P1	14	
DSP GO	P1	15	DSP_GO
TEL ON OUT	P1	16	TEL_ON_OUT
CALLER AUDIO OUT	P1	17	CALLER_OUT
*AUTO SWITCH	P1	18	AUTO_SW
*PGM1 SWITCH	P1	19	PGM1_SW
TEL IDENTIFICATION	P1	20	
	P1	21	NC
	P1	22	NC
LOGIC GND	P1	23	
LOGIC GND	P1	24	
LOGIC GND	P1	25	
-5V LOGIC	P1	26	
+5V LOGIC	P1	27	
+5V LOGIC	P1	28	
-12V LAMP	P1	29	
KEEP ALIVE	P1	30	KEEP_ALIVE
CR WARNING	P1	31	NC
ST WARNING	P1	32	NC
256FS	P1	33	256FS
64FS	P1	34	64FS
FADER WIPER	P1	35	FADER_WIPER
O/L ON	P1	36	O/L_CTL
PGM2 ON	P1	37	PGM2_ON_CTL
AUDIO GND	P1	38	
AUDIO GND	P1	39	
AUDIO GND	P1	40	
AUDIO GND	P1	41	
+48V PHANTOM	P1	42	NC
+16V AUDIO	P1	43	
+16V AUDIO	P1	44	
+16V AUDIO	P1	45	
+16V AUDIO	P1	46	
*SYSTEM RESET	P1	47	SYSTEM_RST
TEL 1 MIX MINUS BOTH	P1	48	TEL1_MM
TEL KEY	P1	49	TEL_KEY
*O/L SWITCH	P1	50	O/L_SW
*PGM2 SWITCH	P1	51	PGM2_SW
TEL ALIVE	P1	52	TEL_ALIVE
CALL AUDIO -	P1	53	CALL_AUDIO_-
SEND/CALLER -	P1	54	SEND_TO_CALL_-
LOGIC GND	P1	55	
LOGIC GND	P1	56	
LOGIC GND	P1	57	
-5V LOGIC	P1	58	
+5V LOGIC	P1	59	
+5V LOGIC	P1	60	
-12V LAMP	P1	61	
*TIMER RESET	P1	62	TMR_RST_CTL
CR MUTE BUS	P1	63	NC
ST MUTE BUS	P1	64	FS
FS	P1	65	FS_IN
SYNC IN	P1	66	SYNC_IN
FADER REFERENCE LOW	P1	67	FADER_REF_LO
FADER ON	P1	68	FADER_ON_CTL
PGM3 ON	P1	69	PGM3_ON_CTL
AUDIO GND	P1	70	
AUDIO GND	P1	71	
AUDIO GND	P1	72	
AUDIO GND	P1	73	
+48V PHANTOM	P1	74	NC
+16V AUDIO	P1	75	
+16V AUDIO	P1	76	
+16V AUDIO	P1	77	
+16V AUDIO	P1	78	
FADER START ENABLE	P1	79	FADER_START_EN
TEL ON INPUT	P1	80	TEL_ON_IN
CALLER AUDIO IN	P1	81	CALLER_IN
*POR EXTERNAL GND IN	P1	82	EXT_POR_GND
*PGM3 SWITCH	P1	83	PGM3_SW
*POR EXTERNAL GROUND	P1	84	POR_GND
CALL AUDIO +	P1	85	CALL_AUDIO_+
SEND/CALLER +	P1	86	SEND_TO_CALL_+
LOGIC GND	P1	87	
LOGIC GND	P1	88	
LOGIC GND	P1	89	
+5V LOGIC	P1	90	
+5V LOGIC	P1	91	
+5V LOGIC	P1	92	
-12V LAMP	P1	93	
CUE/TALK CR	P1	94	CUE_CTL
CR MIC O/L	P1	95	NC
ST MIC O/L	P1	96	NC

to MOTHER board

* - Component not installed.

CUE,TIMER Reset and Tape Feed DipSwitch

DS1: CUE_RST_DSW, TMR_RST_DSW, TAPE_FEED_DSW, EXTRA_DSW

LOGIC GATE ARRAY

U4 — TELCO DIGITAL AIRWAVE MAX 02

1	OFF_SW		
2	CUE_SW		
3	ON_SW		
4	VCC1		
5	FADER_START_ENABLE		
6	FADER_ON_CTL		
7	OTHER_CALL_TO_HYBRID		
8	TAPE_FEED_DSW		
9	STOP_PULSE		
10	SYNC_IN		
11	SYNC_OUT		
12	OPEN_3		
13	OPEN_4		
14	GND1		
15	GND2		
16	START_PULSE		
17	OPEN_5		
18	OPEN_6		
19	POR		
20	EXT_POR		
21	VCC2		
22	OPEN_7		
23	OPEN_8		
24	EXTRA_DSW		
25	VPP		
26	TEL_KEY		
27	TEL_ON_OUT		
28	LMP_CLK_COM		
29	TMR_RST_DSW		
30	TMR_RST_CTL		
31	CE		
32	GND3		
33	ON_LMP_CLK		
34	CUE_CTL		
68	CUE_RST_DSW		
67	OPEN_10		
66	GND5		
65	CALL_TO_RIGHT		
64	AUTO_SW		
63	CALL_TO_LEFT		
62	OPEN_9		
61	MCLK_GATE		
60	TEL_ON_IN		
59	MPRB		
58	MPRA		
57	DCLK		
56	SDI		
55	VCC4		
54	MODE		
53	TEL_ALIVE		
52	CLK16		
51	PGM3_SV		
50	PGM1_SV		
49	GND4		
48	PGM1_ON_CTL		
47	PGM3_LAMP		
46	PGM2_SV		
45	PGM3_ON_CTL		
44	PGM1_LAMP		
43	PGM2_LAMP		
42	PGM2_ON_CTL		
41	O/L_SV		
40	AUTO_LAMP		
39	O/L_LAMP		
38	VCC3		
37	O/L_CTL		
36	OFF_LMP_CLK		
35	CUE_CTL		

TEST CONN (NOT INSTALLED)

1	J8	PROBE B
2	J8	PROBE A
3	J8	BCLK
4	J8	SDI
5	J8	MODE
6	J8	LOGIC GND

SIMM SOCKET

1	J7	CUE SWITCH
2	J7	CUE LED
3	J7	O/L SWITCH
4	J7	O/L LED
5	J7	PGM3 SWITCH
6	J7	PGM3 LED
7	J7	PGM2 SWITCH
8	J7	PGM2 LED
9	J7	PGM1 SWITCH
10	J7	PGM1 LED
11	J7	
12	J7	
13	J7	AUTO SWITCH
14	J7	AUTO LED
15	J7	+5V LOGIC
16	J7	-5V LOGIC
17	J7	LOGIC GND
18	J7	LOGIC GND
19	J7	
20	J7	
21	J7	
22	J7	
23	J7	
24	J7	
25	J7	
26	J7	
27	J7	
28	J7	
29	J7	
30	J7	
31	J7	
32	J7	
33	J7	
34	J7	
35	J7	
36	J7	
37	J7	
38	J7	
39	J7	
40	J7	
41	J7	
42	J7	
43	J7	
44	J7	
45	J7	
46	J7	
47	J7	
48	J7	
49	J7	
50	J7	
51	J7	
52	J7	
53	J7	
54	J7	
55	J7	
56	J7	
57	J7	
58	J7	
59	J7	
60	J7	
61	J7	
62	J7	
63	J7	
64	J7	

to UNIVERSAL switch board

FLEX CABLE CONN

1	J5	ON SWITCH
2	J5	ON LAMP
3	J5	+5V LOGIC
4	J5	LOGIC GND
5	J5	Off SWITCH
6	J5	OFF LAMP

to ON/Off switch board

PACIFIC RESEARCH & ENGINEERING CORPORATION

SIZE	DRAWING NUMBER	REV
D	92-1005	A
12-21-1998_14:44	SHEET 2 OF 2	

REVISIONS				
REV	ECO #	DESCRIPTION	DATE	APPROVAL
B	4361	Add AC termination to 265FS,FS & Mix Data	2/22/99	ERIC KING

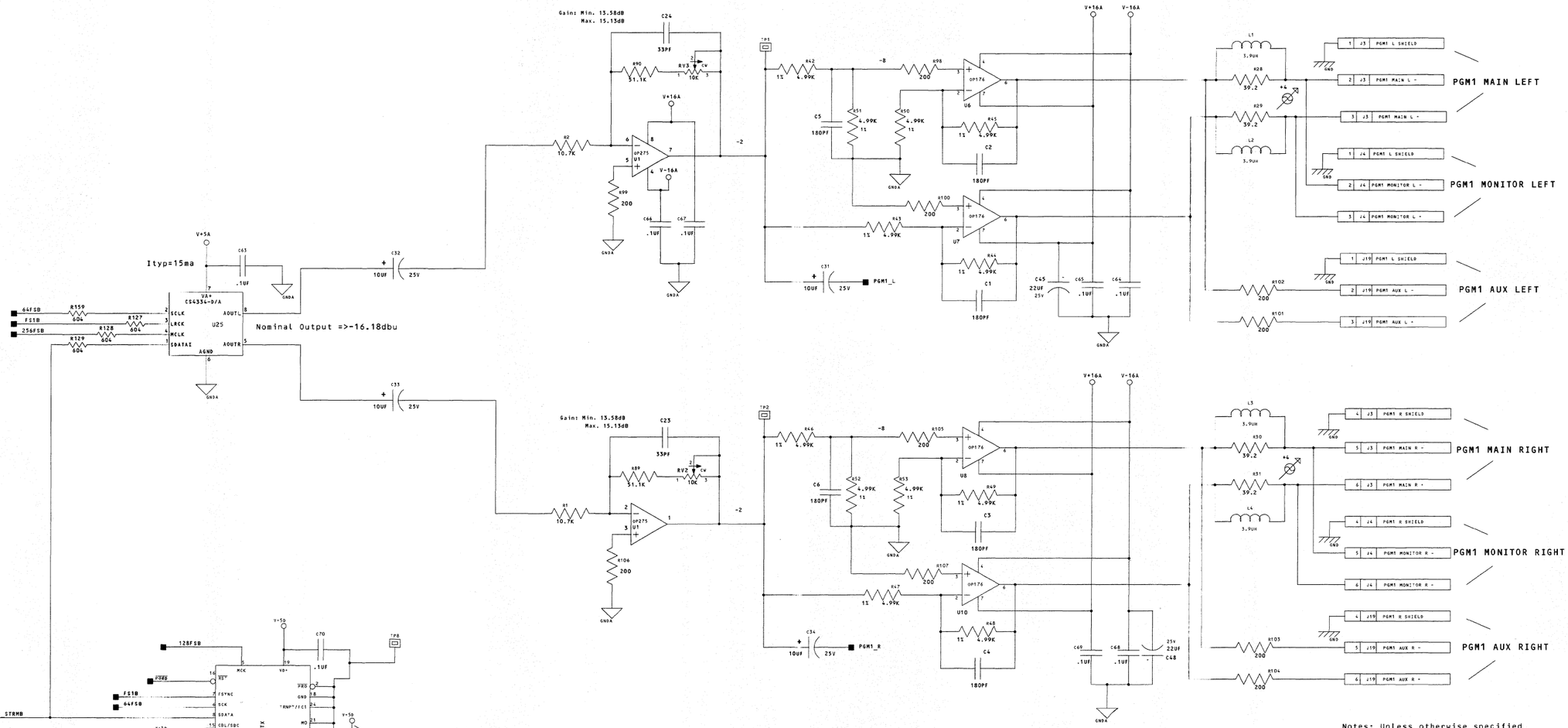

Notes: Unless otherwise specified

1. Resistors are 1%, 0.1W
2. Capacitors are in microfarads

NOTES : GND NET WILL CONNECT TO MOUNTING HOLE CLOSEST TO CONNECTOR. DECOUPLING CAPS CONNECT TO COPPER POUR (GNDA_1). ALL OTHER GNDA TRACES STAR GROUND TO P1.

Note: Default jumper positions across pins 2 & 3

~C6	~C7	Sample Frequency Inforeation TX
1	1	=> not indicated(Rec. default to 48KHz) Manual override or auto set enabled
1	0	=> 48KHz Manual override or auto set disabled
0	1	=> 44.1KHz Manual override or auto set disabled

~C1 = 1=>Normal Audio
EMO,EM1 = 1,1 =>Emphasis not indicated
~C9 = 0=> Stereophonic

APPROVALS	DATE
J HOMBROWSKI	x/x/98

USED ON: DWave

PACIFIC RESEARCH & ENGINEERING CORPORATION

SCHEMATIC

DIGITAL/ANALOG OUTPUT, DWAVE

SIZE	DRAWING NUMBER	REV
D	92-1006	B
	2-22-1999_9:27	SHEET 1 OF 6

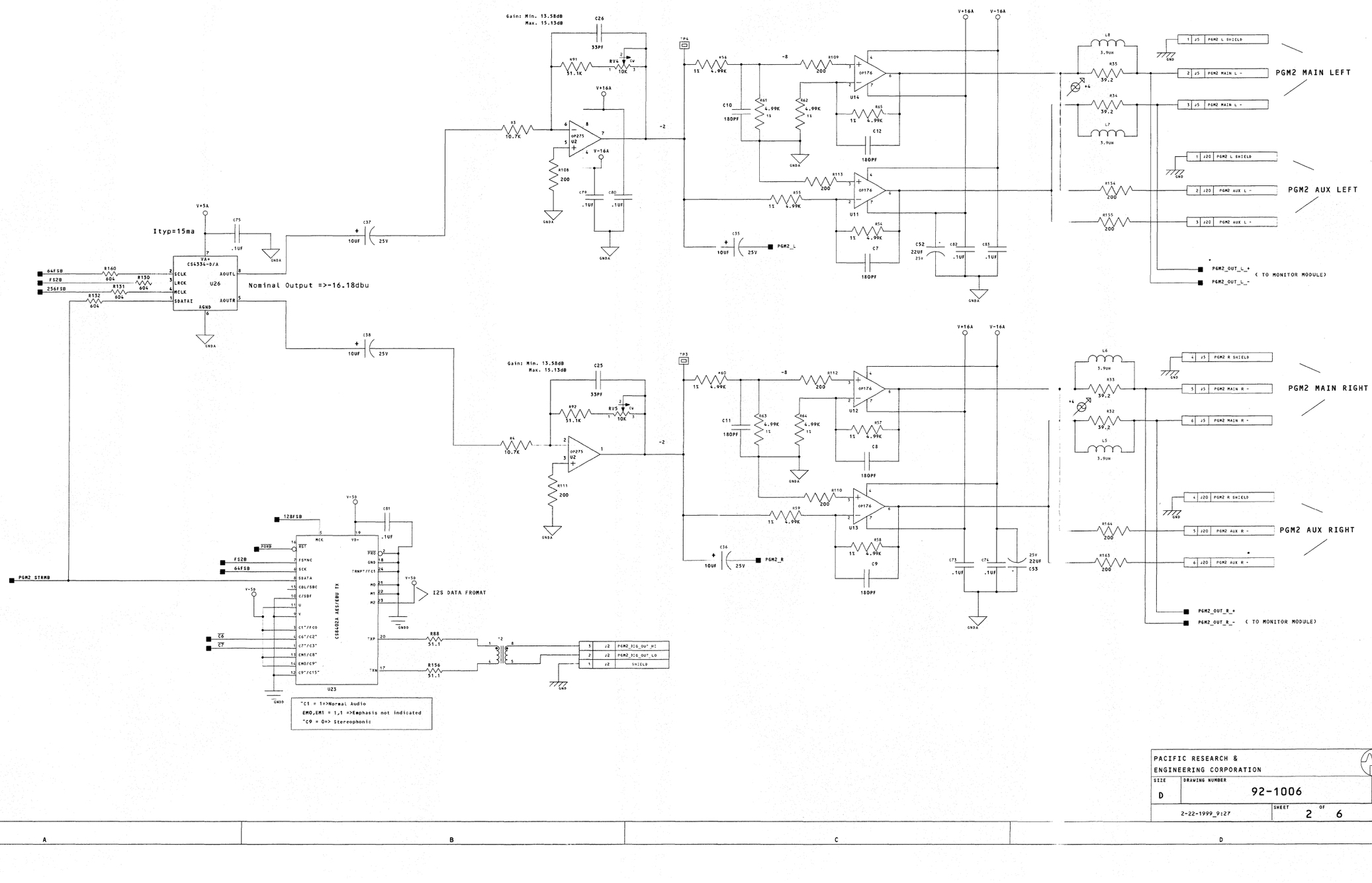

PACIFIC RESEARCH &
ENGINEERING CORPORATION

SIZE	DRAWING NUMBER	REV
D	92-1006	B
2-22-1999_9:27	SHEET 2 OF 6	

PGM3 MAIN LEFT

PGM3 MAIN RIGHT

Gain: Min. 13.58dB
Max. 15.13dB

Ityp=15ma

Nominal Output =>-16.18dbu

I2S DATA FROMAT

(TO MONITOR MODULE)

"C1 = 1=>Normal Audio
EMO,EM1 = 1,1 =>Emphasis not indicated
"C9 = 0=> Stereophonic

PACIFIC RESEARCH & ENGINEERING CORPORATION		
SIZE: D	DRAWING NUMBER: 92-1006	REV: B
	SHEET 3 OF 6	

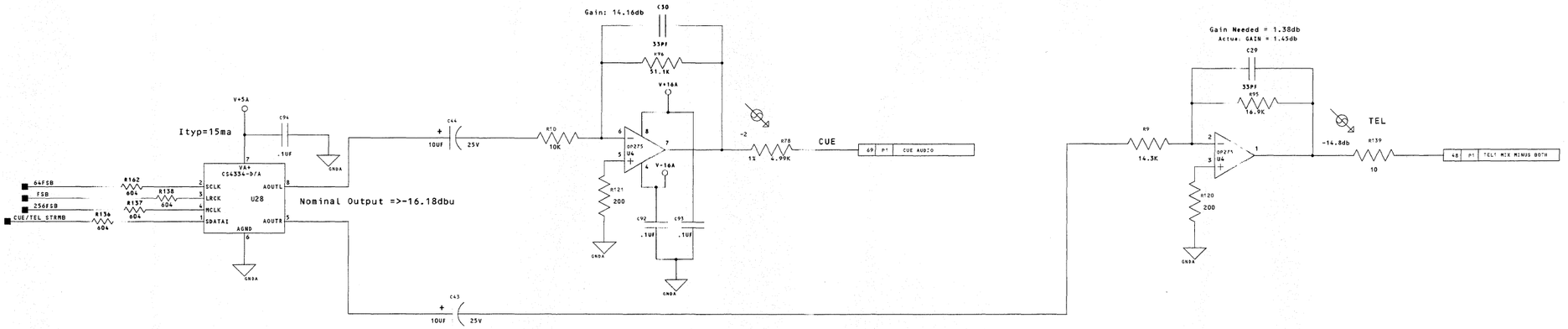

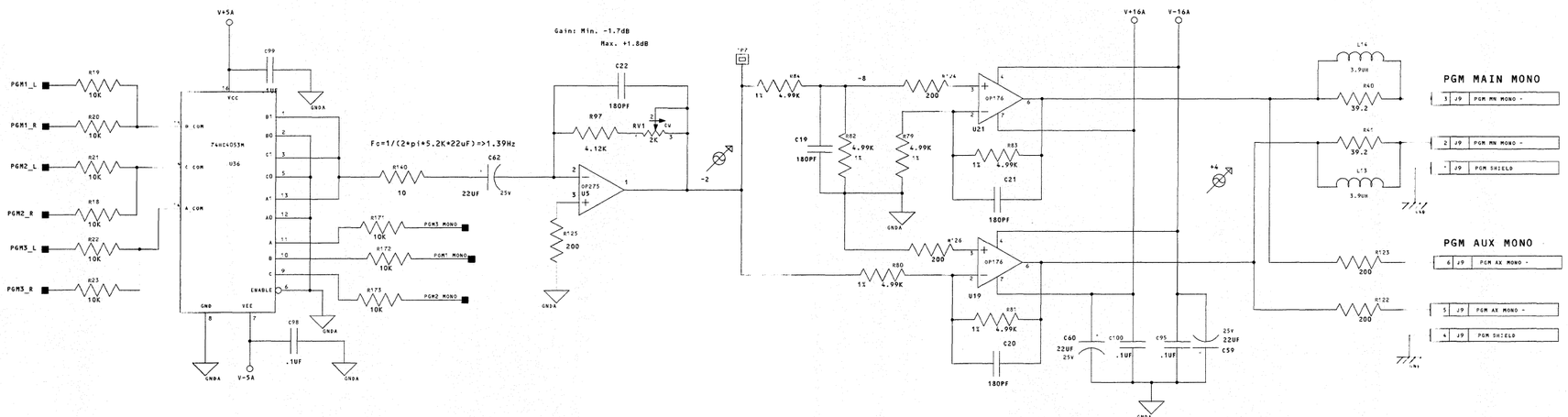

PACIFIC RESEARCH & ENGINEERING CORPORATION		
SIZE: D	DRAWING NUMBER: 92-1006	REV: B
2-22-1999_9:27	SHEET 4 OF 6	

DIN CONNECTOR

MIX DATA	P1	1
256fS MIX CLOCK	P1	2
FADER REFERENCE HIGH	P1	3
CUE	P1	4
	P1	5
AUDIO GND	P1	6
AUDIO GND	P1	7
AUDIO GND	P1	8
AUDIO GND	P1	9
+48V PHANTOM	P1	*0
+16V AUDIO	P1	*1
-16V AUDIO	P1	*2
-16V AUDIO	P1	*3
-16V AUDIO	P1	*4
DSP GO	P1	*5
	P1	*6
AUDIO GND	P1	*7
AUDIO GND	P1	*8
AUDIO GND	P1	*9
AUDIO GND	P1	20
AUDIO GND	P1	21
AUDIO GND	P1	22
LOGIC GND	P1	23
LOGIC GND	P1	24
LOGIC GND	P1	25
+5V LOGIC	P1	26
+5V LOGIC	P1	27
+5V LOGIC	P1	28
+12V LAMP	P1	29
KEEP ALIVE	P1	30
	P1	31
	P1	32
DISPLAY SERIAL DATA *	P1	33
DISPLAY VU/*PPM	P1	34
MASTER FADER WIPER 2	P1	35
*PGM2/PGM3	P1	36
NC	P1	37
AUDIO GND	P1	38
AUDIO GND	P1	39
AUDIO GND	P1	40
AUDIO GND	P1	41
+48V PHANTOM	P1	42
-16V AUDIO	P1	43
-16V AUDIO	P1	44
-16V AUDIO	P1	45
-16V AUDIO	P1	46
*SYSTEM RESET	P1	47
PGM2 OUT L -	P1	49
PGM3 OUT L -	P1	50
PGM2 OUT R -	P1	51
PGM3 OUT R -	P1	52
SEND/CALLER -	P1	53
CALL AUDIO -	P1	54
LOGIC GND	P1	55
LOGIC GND	P1	56
LOGIC GND	P1	57
+5V LOGIC	P1	58
+5V LOGIC	P1	59
+5V LOGIC	P1	60
+12V LAMP	P1	61
	P1	62
	P1	63
	P1	64
DISPLAY SERIAL DATA 2	P1	65
FS MIX CLOCK	P1	66
FADER REFERENCE LOW	P1	67
NC	P1	68
AUDIO GND	P1	70
AUDIO GND	P1	71
AUDIO GND	P1	72
AUDIO GND	P1	73
+48V PHANTOM	P1	74
+16V AUDIO	P1	75
+16V AUDIO	P1	76
+16V AUDIO	P1	77
+16V AUDIO	P1	78
FADER START ENABLE	P1	79
	P1	80
PGM2 OUT L +	P1	81
PGM3 OUT L +	P1	82
PGM2 OUT R +	P1	83
PGM3 OUT R +	P1	84
SEND/CALLER +	P1	85
CALL AUDIO +	P1	86
LOGIC GND	P1	87
LOGIC GND	P1	88
LOGIC GND	P1	89
-5V LOGIC	P1	90
-5V LOGIC	P1	91
-5V LOGIC	P1	92
+12V LAMP	P1	93
	P1	94
	P1	95
	P1	96

to MOTHER board

MIX SDATA
FS256 EN
FADER REFERENCE HI
CUE METER CTL
NC
DSP GO
KEEP ALIVE
VU/*PPM
MASTER FADER WIPER
PGM3 METER
SYSTEM RESET
FS IN
FADER REFERENCE LO
FADER START ENABLE
PGM2_OUT_L_-
PGM3_OUT_L_-
PGM2_OUT_R_-
PGM3_OUT_R_-
PGM2_OUT_L_+
PGM3_OUT_L_+
PGM2_OUT_R_+
PGM3_OUT_R_+

L15 10uH
C106 .1UF
TP14 TP15 TP9 TP10 TP12 TP16
F7 F3 F2 F4
C97 .1UF
C76 22UF 25V
C96 .1UF
C77 22UF 25V
C102 .1UF
C78 22UF 25V
C101 .1UF
C61 22UF 25V
V+16A V-16A V-5A V+12D

GNDA GNDD

FADER START/VU!PPM SELECT DIP SWITCH

V+5D
DS7
FADER START EN
VU!PPM SELECT
TO FPGA Pg.6
R27 10K
R26 10K

FADER CONNECTOR

0dB RED YEL BLU BLK ∞
J11
FADER REFERENCE HI
MASTER FADER WIPER
FADER REFERENCE LO

SIMM SOCKET

*PGM3 SWITCH METER	J7	1
PGM3 METER LED	J7	2
*CUE SWITCH METER	J7	3
CUE METER LED	J7	4
	J7	5
	J7	6
	J7	7
	J7	8
*PGM3 SWITCH	J7	9
PGM3 LED	J7	*0
*PGM2 SWITCH	J7	*1
PGM2 LED	J7	*2
*PGM1 SWITCH	J7	*3
PGM1 LED	J7	*4
-5V LOGIC	J7	*5
-5V LOGIC	J7	*6
LOGIC GND	J7	*7
LOGIC GND	J7	*8
	J7	*9
	J7	20
	J7	21
	J7	22
	J7	23
	J7	24
	J7	25
	J7	26
	J7	27
	J7	28
	J7	29
	J7	30
	J7	31
	J7	32
	J7	33
	J7	34
	J7	35
	J7	36
	J7	37
	J7	38
	J7	39
	J7	40
	J7	41
	J7	42
	J7	43
	J7	44
	J7	45
	J7	46
	J7	47
	J7	48
	J7	49
	J7	50
	J7	51
	J7	52
	J7	53
	J7	54
	J7	55
	J7	56
	J7	57
	J7	58
	J7	59
	J7	60
	J7	61
	J7	62
	J7	63
	J7	64

to UNIVERSAL switch board

V+5D
R*3 10K
R*4 10K
R*5 10K
R*6 10K
R85 10K
PGM3_SW_METER
CUE_SW_METER
PGM3_SW
PGM2_SW
PGM1_SW

R141 150 0.125W
Q3 2N7002 PGM3_METER
R170 150 0.125W
Q5 2N7002 CUE_METER_CTL
R142 150 0.125W
Q4 2N7002 PGM3_MONO
R6 150 0.125W
Q1 2N7002 PGM2_MONO
R5 150 0.125W
Q2 2N7002 PGM1_MONO

For 4053 Pg4

V-16A V-5A
U29 LM79L05AC
VIN1 VIN2 VIN3 VIN4 VOUT GND
C111 .1UF C112 .1UF
TP13

For D/A converters

Icont=85mA @ 45 C No heat sink
Approx. Pd=.6W @ 45 C
Provide Large Pads

V+12D V+5A
U37 LM78L05AC
VIN VOUT GND1 GND2 GND3 GND4
C49 22UF 25V C71 .1UF
C50 22UF 25V C72 .1UF

SPARE

V+16A
OP275 U5
C107 .1UF C108 .1UF
V-16A

PACIFIC RESEARCH & ENGINEERING CORPORATION

SIZE	DRAWING NUMBER	REV
D	92-1006	B
2-22-1999_9:28	SHEET 5 OF 6	

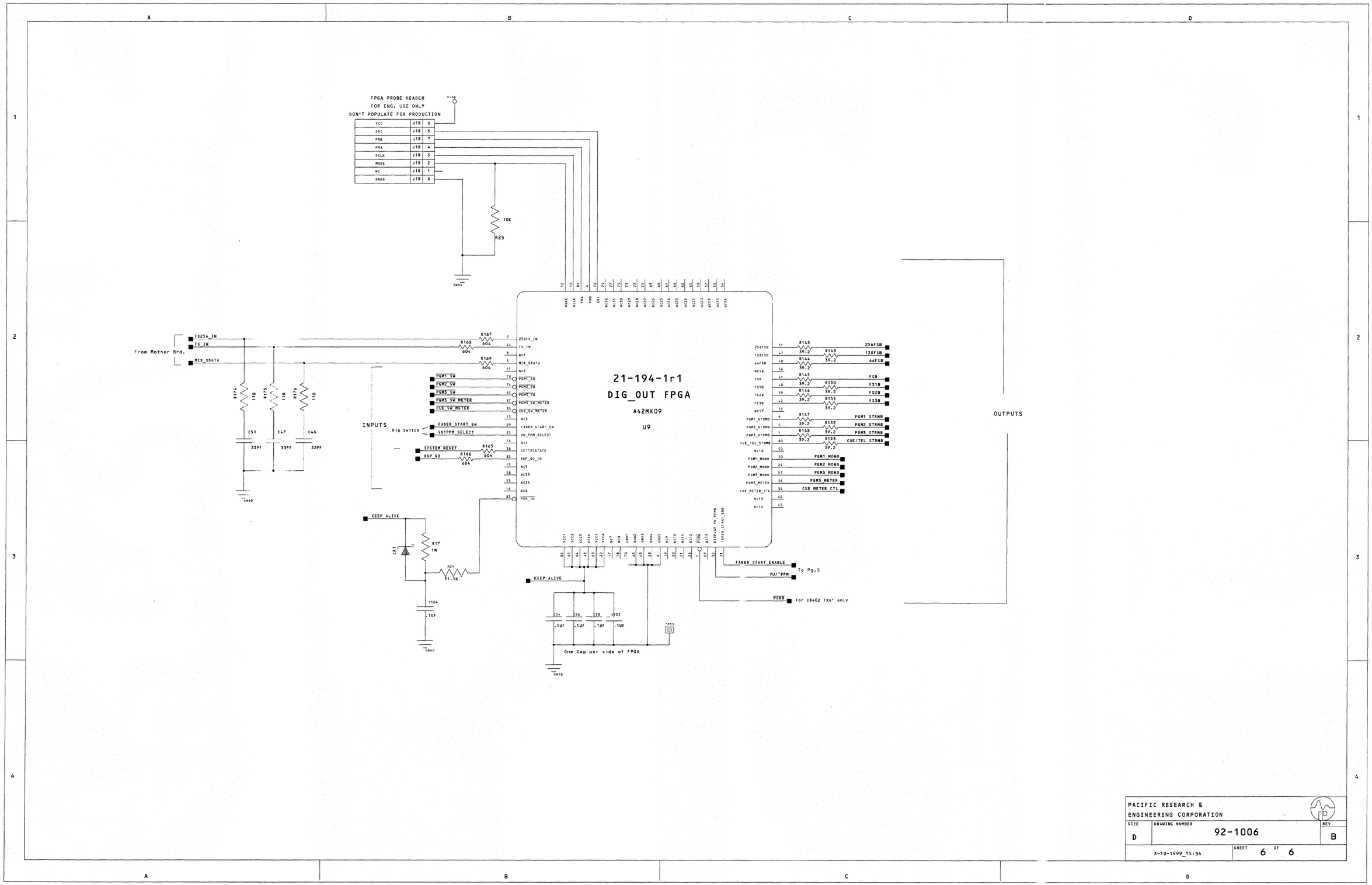
FPGA PROBE HEADER
FOR ENG. USE ONLY
DON'T POPULATE FOR PRODUCTION
VCC J18 6
SDI J18 5
PRB J18 7
PRA J18 4
DCLK J18 3
MODE J18 2
NC J18 1
GNDD J18 8
V-5D
10K
R25
GNDD
From Mother Brd.
FS256_IN
FS_IN
MIX_SDATA
R174 110
R175 110
R176 110
C51 33PF
C47 33PF
C46 33PF
INPUTS
Dip Switch
PGM1_SW
PGM2_SW
PGM3_SW
PGM3_SW_METER
CUE_SW_METER
FADER_START_EN
VU/PPM_SELECT
SYSTEM_RESET
DSP_GO
R167 604
R168 604
R169 604
R165 604
R166 604
21-194-1r1
DIG_OUT FPGA
A42MX09
U9
256FSB
128FSB
64FSB
FSB
FS1B
FS2B
FS3B
PGM1_STRMB
PGM2_STRMB
PGM3_STRMB
CUE/TEL_STRMB
PGM1_MONO
PGM2_MONO
PGM3_MONO
PGM3_METER
CUE_METER_CTL
OUTPUTS
KEEP ALIVE
CR1
R17 1M
R24 51.1K
C104 .1UF
FADER_START_ENABLE
VU/PPM
To Pg.5
PORB
For C8402 TXs' only
C54 .1UF
C56 .1UF
C58 .1UF
C103 .1UF
One Cap per side of FPGA
PACIFIC RESEARCH &
ENGINEERING CORPORATION
SIZE D
DRAWING NUMBER 92-1006
REV B
3-10-1999_15:34
SHEET 6 OF 6

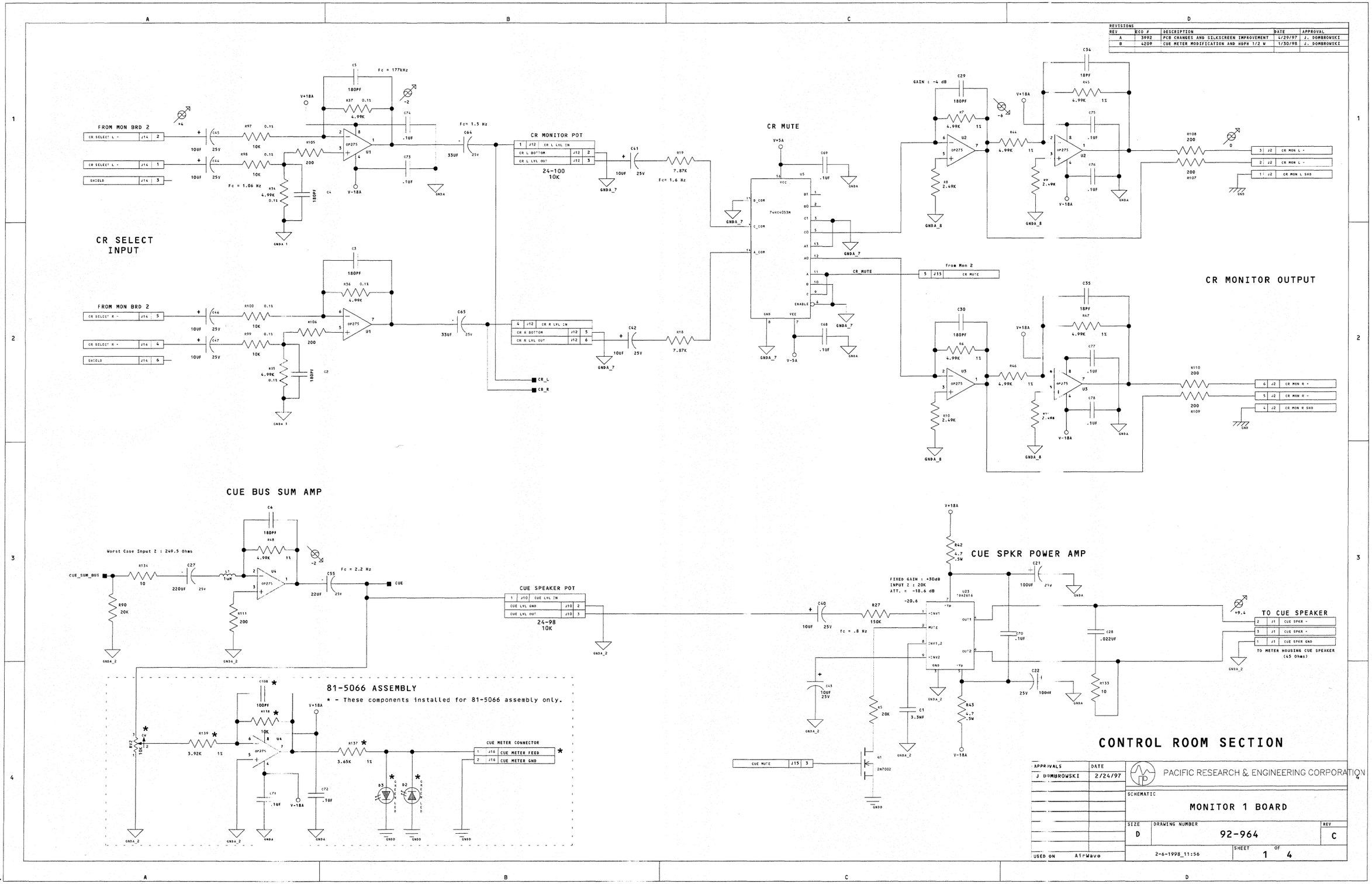

REVISIONS
REV | ECO # | DESCRIPTION | DATE | APPROVAL
A | 3992 | PCB CHANGES AND SILKSCREEN IMPROVEMENT | 4/29/97 | J. DOMBROWSKI
B | 4209 | CUE METER MODIFICATION AND HDPH 1/2 W | 1/30/98 | J. DOMBROWSKI
CR SELECT INPUT
FROM MON BRD 2
CR MONITOR POT
24-100
10K
CR MUTE
74HC4053M
CR MONITOR OUTPUT
CUE BUS SUM AMP
Worst Case Input Z : 249.5 Ohms
CUE SPEAKER POT
24-98
10K
CUE SPKR POWER AMP
TO CUE SPEAKER
TO METER HOUSING CUE SPEAKER (45 Ohms)
81-5066 ASSEMBLY
* - These components installed for 81-5066 assembly only.
CUE METER CONNECTOR
CUE METER FEED
CUE METER GND
CONTROL ROOM SECTION
APPROVALS
J DOMBROWSKI
DATE
2/24/97
PACIFIC RESEARCH & ENGINEERING CORPORATION
SCHEMATIC
MONITOR 1 BOARD
SIZE
D
DRAWING NUMBER
92-964
REV
C
2-6-1998_11:56
SHEET 1 OF 4
USED ON AirWave

CUE FUNCTION NOTE:
CUE LEFT CHANNEL / CR AUDIO MONO SUM RIGHT CHANNEL SET UP
* - REMOVE R22.
** - ADD 2 20K (6-255) COMPONENTS FOR R140 AND R141.

CR CUE FOR HEADPHONES

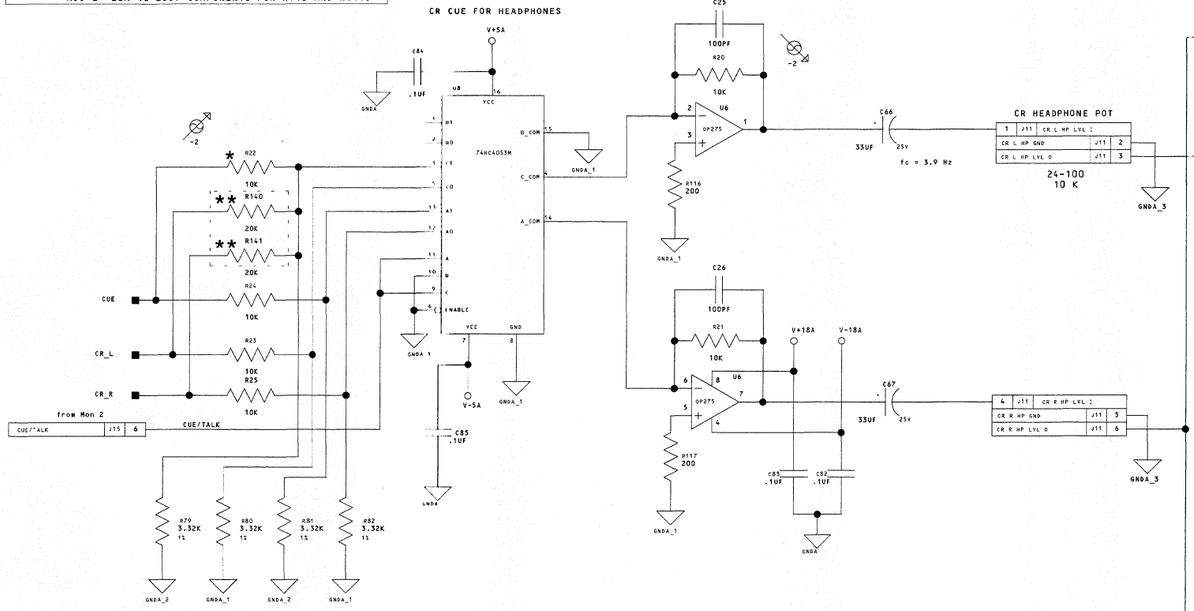

CR HEADPHONE POWER AMP

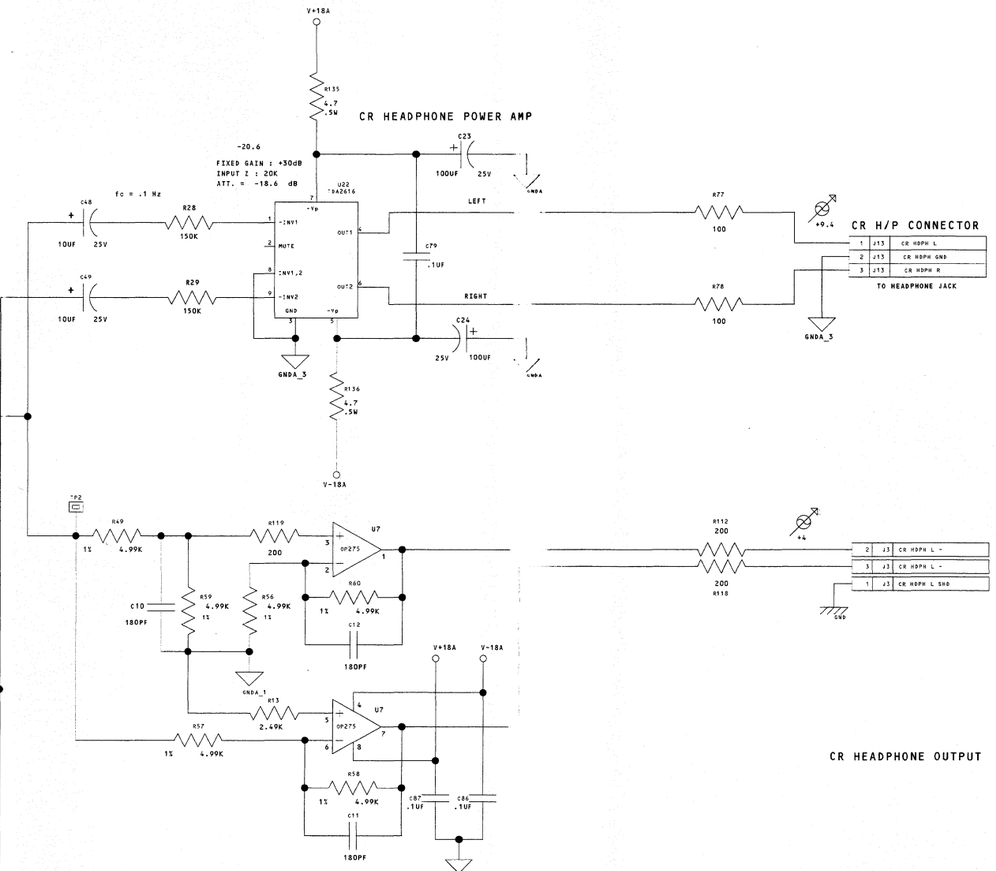

CR HEADPHONE OUTPUT

PACIFIC RESEARCH & ENGINEERING CORPORATION

SIZE	DRAWING NUMBER	REV
D	92-964	C
2-6-1998_11:39	SHEET 2 OF 4	

STUDIO SECTION

PACIFIC RESEARCH & ENGINEERING CORPORATION

SIZE	DRAWING NUMBER	REV
D	92-964	C
2-4-1998_11:23	SHEET 3 OF 4	

DIN CONNECTOR

PGM1 MAIN L	P1	1	NC
PGM1 TELCO L	P1	2	NC
PGM2 MAIN L	P1	3	NC
PGM2 TELCO L	P1	4	NC
O/L SUM BUS	P1	5	NC
AUDIO GND	P1	6	GNDA
AUDIO GND	P1	7	
AUDIO GND	P1	8	
AUDIO GND	P1	9	
+48V PHANTOM	P1	10	NC
+18V AUDIO	P1	11	
+18V AUDIO	P1	12	
-18V AUDIO	P1	13	
-18V AUDIO	P1	14	
PGM1/TELCO L	P1	15	NC
PGM2/TELCO L	P1	16	NC
	P1	17	NC
	P1	18	NC
	P1	19	NC
	P1	20	NC
	P1	21	NC
	P1	22	NC
LOGIC GND	P1	23	GNDD
LOGIC GND	P1	24	
LOGIC GND	P1	25	
+5V LOGIC	P1	26	
+5V LOGIC	P1	27	
+5V LOGIC	P1	28	
+12V LAMP	P1	29	NC
KEEP ALIVE	P1	30	NC
CR WARNING	P1	31	NC
ST WARNING	P1	32	NC
	P1	33	NC
	P1	34	NC
	P1	35	NC
	P1	36	NC
	P1	37	NC
AUDIO GND	P1	38	GNDA
AUDIO GND	P1	39	
AUDIO GND	P1	40	
AUDIO GND	P1	41	
+48V PHANTOM	P1	42	NC
+18V AUDIO	P1	43	
+18V AUDIO	P1	44	
-18V AUDIO	P1	45	
-18V AUDIO	P1	46	
	P1	47	NC
	P1	48	NC
PGM1 OUT L -	P1	49	NC
PGM2 OUT L -	P1	50	NC
PGM1 OUT R -	P1	51	NC
PGM2 OUT R -	P1	52	NC
SEND/CALLER -	P1	53	NC
CALL AUDIO -	P1	54	NC
LOGIC GND	P1	55	
LOGIC GND	P1	56	
LOGIC GND	P1	57	GNDD
-5V LOGIC	P1	58	
-5V LOGIC	P1	59	
-5V LOGIC	P1	60	
-12V LAMP	P1	61	NC
TIMER RESET	P1	62	NC
CR MUTE BUS	P1	63	NC
ST MUTE BUS	P1	64	NC
PGM1 MAIN R	P1	65	NC
PGM1 TELCO R	P1	66	NC
PGM2 MAIN R	P1	67	NC
PGM2 TELCO R	P1	68	NC
CUE SUM BUS	P1	69	CUE_SUM_BUS
AUDIO GND	P1	70	
AUDIO GND	P1	71	
AUDIO GND	P1	72	GNDA
AUDIO GND	P1	73	
+48V PHANTOM	P1	74	NC
+18V AUDIO	P1	75	
+18V AUDIO	P1	76	
-18V AUDIO	P1	77	
-18V AUDIO	P1	78	
PGM1/TELCO R	P1	79	NC
PGM2/TELCO R	P1	80	NC
PGM1 OUT L +	P1	81	NC
PGM2 OUT L +	P1	82	NC
PGM1 OUT R +	P1	83	NC
PGM2 OUT R +	P1	84	NC
SEND/CALLER +	P1	85	NC
CALL AUDIO +	P1	86	NC
LOGIC GND	P1	87	
LOGIC GND	P1	88	
LOGIC GND	P1	89	GNDD
-5V LOGIC	P1	90	
-5V LOGIC	P1	91	
-5V LOGIC	P1	92	
-12V LAMP	P1	93	
CUE/TALK CR	P1	94	NC
CR MIC O/L	P1	95	NC
ST MIC O/L	P1	96	NC

to MOTHER board

TP7 GNDD

TP6 GNDA

TP9 V+18A — R7 — C114 .1UF — C63 22UF 25V

TP8 V-18A — R6 — C113 .1UF — C62 22UF 25V

TP3 V+5D — R5 — C101 .1UF — C61 22UF 25V

V+12D — C118 22UF 25V

ST_L — R3 4.99K 1% — V+5A — C104 .1UF — U39 74HC4053M (VCC, VEE, GND, ENABLE, A, B, C, A0, A1, C0, C1, B0, B1, A_COM, B_COM, C_COM) — R76 7.87K — R74 4.99K 1% — R75 4.99K 1% — TB — TB_R — ST_TLKBK — GNDA_5 — C105 .1UF — V-5A

ST_R — R4 4.99K 1%

V+5D — R32 10K

TALKBACK SWITCH FLEX CABLE CONN

ST TLKBK SWITCH	J15	7	to Mon 2

TLKBK_SW

1	J9	STUDIO TLKBK SWITCH
2	J9	TLKBK LAMP
3	J9	-5V LOGIC
4	J9	LOGIC GND
5	J9	
6	J9	

to TLKBK switch board

GAIN : UNITY

ST_L — R3 4.99K 1% — C20 180PF — R71 4.99K 1% — U16 OP275 — R72 4.99K 1% — U16 OP275 — C39 18PF — R73 4.99K 1% — C106 .1UF — R17 2.49K — C107 .1UF — V-18A — GNDA_4 — R131 200 — R130 200 — J5 3 ST HDPH L - — J5 2 ST HDPH L - — J5 1 ST HDPH L SHD — GND

TLKBK TO TALENT H/P

TALENT H/P

ST_R — R4 4.99K 1% — C19 180PF — R68 4.99K 1% — U15 OP275 — R69 4.99K 1% — U15 OP275 — C38 18PF — R70 4.99K 1% — C102 .1UF — R16 2.49K — C103 .1UF — V-18A — GNDA_4 — R129 200 — R128 200 — J5 6 ST HDPH R - — J5 5 ST HDPH R - — J5 4 ST HDPH R SHD — GND

V+12D — U19 LM340T-5 (VIN, VOUT, GND) — C119 .1UF — R132 4.99K 1% — C117 22UF 25V

CR & ST WARNING CONN

1	J6	LOGIC GND	
2	J6	-5V LOGIC	
3	J6	CR RELAY	
4	J6	CR RELAY	
5	J6	LOGIC GND	
6	J6	-5V LOGIC	
7	J6	ST RELAY	
8	J6	ST RELAY	

CR_WARN — R31 1K — U18 AQW212 RELAY — CR WARNING — J15 1

CR & ST WARNING

ST_WARN — R30 1K — U17 AQW212 RELAY — ST WARNING — J15 2 — from Mon 2

POWER REGS FOR ANALOG SWITCHES

V+18A — U21 LM78L05AC (VIN, VOUT, GND1, GND2, GND3, GND4) — V+5A — TP5 — C112 .1UF — C111 .1UF

V-18A — U20 LM79L05AC (VIN1, VIN2, VIN3, VIN4, VOUT, GND) — V-5A — TP4 — C110 .1UF — C109 .1UF

PACIFIC RESEARCH & ENGINEERING CORPORATION

SIZE	DRAWING NUMBER	REV
D	92-964	C
2-4-1998_11:23	SHEET 4 OF 4	

REVISIONS				
REV	ECO #	DESCRIPTION	DATE	APPROVAL
A		PRODUCTION RELEASE		
B	3979	SCHEMATIC CORRECTIONS	4/2/97	J. DOMBROWSKI
C	4020	SWAPPED J8 AND J9	5/15/97	J. DOMBROWSKI
D	4248	FPGA CONTROL LINE RESISTORS	4/15/98	J. DOMBROWSKI

EXT 1 INPUT
Nominal Input Level = +4dBu
(RLS 1 INPUT)

EXT 1 IN L - J1 2
EXT 1 IN L + J1 3
EXT 1 IN L SHD J1 1
EXT 1 IN R - J1 5
EXT 1 IN R + J1 6
EXT 1 IN R SHD J1 4

This ground connects to mounting hole.

EXT 2 INPUT
Nominal Input Level = +4dBu
(RLS 2 INPUT)

EXT 2 IN L - J2 2
EXT 2 IN L + J2 3
EXT 2 IN L SHD J2 1
EXT 2 IN R - J2 5
EXT 2 IN R + J2 6
EXT 2 IN R SHD J2 4

This ground connects to mounting hole.

CR (RLS2)

ST (RLS1)

CR DIRECT OUTPUT
(RLS 2 OUTPUT)

CR DIR L - J8 3
CR DIR L + J8 2
CR DIR L SHD J8 1
CR SELECT L - J13 1
CR SELECT L + J13 2
SHIELD J13 3
CR DIR R - J8 6
CR DIR R + J8 5
CR DIR R SHD J8 4
CR SELECT R - J13 4
CR SELECT R + J13 5
SHIELD J13 6

L_CR_SUM
R_CR_SUM
L_ST_SUM
R_ST_SUM

NOTE : NET "GND" TIES TO NEAREST CHASSIS MOUNTING HOLE.
NOTE : GROUNDS "GNDA_1" TO "GNDA_9" TIE TOGETHER AT P1 AUDIO COMMON.

APPROVALS	DATE
J DOMBROWSKI	9/9/96

USED ON AirWave

PACIFIC RESEARCH & ENGINEERING CORPORATION

SCHEMATIC
MON 2 / RLS BOARD

SIZE D | DRAWING NUMBER 92-965 | REV D

4-15-1998_16:56 | SHEET 1 OF 5

EXT 3 INPUT (RLS 3 INPUT)

EXT 3 IN L - J3 2
EXT 3 IN L + J3 3
EXT 3 IN L SHD J3 1
C50 10UF 25V
C49 10UF 25V
Fc = 1.06 Hz
R157 0.1% 10K
R158 0.1% 10K
R181 200
R85 4.99K 0.1%
C18 180PF
C16 180PF Fc = 177kHz
R84 0.1% 4.99K
C106 .1UF
C105 .1UF
U3 OP275
V+18A V-18A GNDA
C72 22UF 25V Fc= 2.9 Hz
R125 4.99K 1%
R119 4.99K 1%
U26 74HC4053M
V+5A C109 .1UF
B_COM C_COM A_COM B1 B0 C1 C0 A1 A0 A B C ENABLE GND VEE
GNDA_3 V-5A C110 .1UF
R201 10K EXT3_CR
This ground connects to mounting hole.
Nominal Input Level = +4dBu
GND

EXT 3 IN R - J3 5
EXT 3 IN R + J3 6
EXT 3 IN R SHD J3 4
C51 10UF 25V
C52 10UF 25V
R156 0.1% 10K
R155 0.1% 10K
R180 200
R82 4.99K 0.1%
C14 180PF
C15 180PF
R83 0.1% 4.99K
C73 22UF 25V
R126 4.99K 1%
R127 4.99K 1%
U25 74HC4053M
C113 .1UF
C114 .1UF
R202 10K EXT3_ST
L_CR_SUM R_CR_SUM L_ST_SUM R_ST_SUM

EXT 4 INPUT (RLS 4 INPUT)

EXT 4 IN L - J4 2
EXT 4 IN L + J4 3
EXT 4 IN L SHD J4 1
C54 10UF 25V
C53 10UF 25V
Fc = 1.06 Hz
R153 0.1% 10K
R154 0.1% 10K
R179 200
R81 4.99K 0.1%
C12 180PF Fc = 177kHz
R80 0.1% 4.99K
C100 .1UF
C115 .1UF
U4 OP275
V+18A V-18A GNDA
C74 22UF 25V Fc= 2.9 Hz
R116 4.99K 1%
R129 4.99K 1%
U24 74HC4053M
V+5A C101 .1UF
B_COM C_COM A_COM B1 B0 C1 C0 A1 A0 A B C ENABLE GND VEE
GNDA_4 V-5A C102 .1UF
R203 10K EXT4_CR
This ground connects to mounting hole.
Nominal Input Level = +4dBu
GND

EXT 4 IN R - J4 5
EXT 4 IN R + J4 6
EXT 4 IN R SHD J4 4
C47 10UF 25V
C48 10UF 25V
R152 0.1% 10K
R151 0.1% 10K
R186 200
R86 4.99K 0.1%
C11 180PF
R87 0.1% 4.99K
C71 22UF 25V
R117 4.99K 1%
R118 4.99K 1%
U27 74HC4053M
C103 .1UF
C104 .1UF
R204 10K EXT4_ST

ST DIRECT OUTPUT (RLS 1 OUTPUT)

C17 180PF
R121 4.99K 1%
R196 10
R32 2.49K
U13 OP275
R122 4.99K 1%
R33 2.49K
C111 .1UF
C112 .1UF
C37 18PF
R123 4.99K 1%
R183 200
R182 200
J9 ST DIR L -
J9 ST DIR L -
J9 ST DIR L SHD
J13 ST SELECT L -
J13 ST SELECT L -
J13 SHIELD

C19 180PF
R120 4.99K 1%
R195 10
R30 2.49K
U14 OP275
R124 4.99K 1%
R31 2.49K
C107 .1UF
C108 .1UF
C38 18PF
R128 4.99K 1%
R185 200
R184 200
J9 ST DIR R -
J9 ST DIR R -
J9 ST DIR R SHD
J13 ST SELECT R -
J13 ST SELECT R -
J13 SHIELD
GNDA_9

PACIFIC RESEARCH & ENGINEERING CORPORATION

SIZE	DRAWING NUMBER	REV
D	92-965	D
4-15-1998_14:19	SHEET 2 OF 5	

PGM 1
(RLS 5 INPUT)

PGM 2
(RLS 6 INPUT)

PACIFIC RESEARCH & ENGINEERING CORPORATION		
SIZE: D	DRAWING NUMBER: 92-965	REV: D
4-15-1998_14:19	SHEET 3 OF 5	

DIN CONNECTOR

PGM1 MAIN L	P1	1	NC
PGM1 TELCO L	P1	2	NC
PGM2 MAIN L	P1	3	NC
PGM2 TELCO L	P1	4	NC
D/L SUM BUS	P1	5	NC
AUDIO GND	P1	6	GNDA
AUDIO GND	P1	7	GNDA
AUDIO GND	P1	8	GNDA
AUDIO GND	P1	9	GNDA
+48V PHANTOM	P1	10	NC
-18V AUDIO	P1	11	V-18A
-18V AUDIO	P1	12	V-18A
-18V AUDIO	P1	13	V-18A
-18V AUDIO	P1	14	V-18A
PGM1/TELCO L	P1	15	NC
PGM2/TELCO L	P1	16	NC
	P1	17	NC
	P1	18	NC
	P1	19	NC
	P1	20	NC
	P1	21	NC
	P1	22	NC
LOGIC GND	P1	23	GNDD
LOGIC GND	P1	24	GNDD
LOGIC GND	P1	25	GNDD
-5V LOGIC	P1	26	-5V
+5V LOGIC	P1	27	V+5D
+5V LOGIC	P1	28	V+5D
-12V LAMP	P1	29	NC
KEEP ALIVE	P1	30	KEEP_ALIVE
CR WARNING	P1	31	CR_WARN_CTL
ST WARNING	P1	32	ST_WARN_CTL
	P1	33	NC
	P1	34	NC
	P1	35	NC
	P1	36	NC
	P1	37	NC
AUDIO GND	P1	38	GNDA
AUDIO GND	P1	39	GNDA
AUDIO GND	P1	40	GNDA
AUDIO GND	P1	41	GNDA
+48V PHANTOM	P1	42	NC
-18V AUDIO	P1	43	V-18A
-18V AUDIO	P1	44	V-18A
-18V AUDIO	P1	45	V-18A
-18V AUDIO	P1	46	V-18A
	P1	47	NC
	P1	48	NC
PGM1 OUT L -	P1	49	PGM1_OUT_L_-
PGM2 OUT L -	P1	50	PGM2_OUT_L_-
PGM1 OUT R -	P1	51	PGM1_OUT_R_-
PGM2 OUT R -	P1	52	PGM2_OUT_R_-
SEND/CALLER -	P1	53	SEND_TO_CALL_-
CALL AUDIO -	P1	54	CALL_AUDIO_-
LOGIC GND	P1	55	GNDD
LOGIC GND	P1	56	GNDD
LOGIC GND	P1	57	GNDD
+5V LOGIC	P1	58	V+5D
-5V LOGIC	P1	59	-5V
-5V LOGIC	P1	60	-5V
-12V LAMP	P1	61	NC
TIMER RESET	P1	62	NC
CR MUTE BUS	P1	63	CR_MUTE_CTL
ST MUTE BUS	P1	64	ST_MUTE_CTL
PGM1 MAIN R	P1	65	NC
PGM1 TELCO R	P1	66	NC
PGM2 MAIN R	P1	67	NC
PGM2 TELCO R	P1	68	NC
CUE SUM BUS	P1	69	NC
AUDIO GND	P1	70	GNDA
AUDIO GND	P1	71	GNDA
AUDIO GND	P1	72	GNDA
AUDIO GND	P1	73	GNDA
+48V PHANTOM	P1	74	NC
-18V AUDIO	P1	75	V-18A
-18V AUDIO	P1	76	V-18A
-18V AUDIO	P1	77	V-18A
-18V AUDIO	P1	78	V-18A
PGM1/TELCO R	P1	79	NC
PGM2/TELCO R	P1	80	NC
PGM1 OUT L +	P1	81	PGM1_OUT_L_+
PGM2 OUT L +	P1	82	PGM2_OUT_L_+
PGM1 OUT R +	P1	83	PGM1_OUT_R_+
PGM2 OUT R +	P1	84	PGM2_OUT_R_+
SEND/CALLER +	P1	85	SEND_TO_CALL_+
CALL AUDIO +	P1	86	CALL_AUDIO_+
LOGIC GND	P1	87	GNDD
LOGIC GND	P1	88	GNDD
LOGIC GND	P1	89	GNDD
-5V LOGIC	P1	90	-5V
+5V LOGIC	P1	91	V+5D
-5V LOGIC	P1	92	-5V
+12V LAMP	P1	93	NC
CUE/TALK CR	P1	94	CUE/TALK_CR
CR MIC O/L	P1	95	CR_MIC_O/L
ST MIC O/L	P1	96	ST_MIC_O/L

to MOTHER board

TELCO MIX
(RLS 7 INPUT)

RLS 7 IN L - J7 2
RLS 7 IN L + J7 3
RLS 7 IN L SHD J7 1
SEND_TO_CALL_-
SEND_TO_CALL_+
R19 0 OHM
R18 0 OHM
R20 0 OHM
R21 0 OHM
** : INSTALLED IN MON 2 ASSY ONLY
Fc = 1.06 Hz
C65 10UF 25V
C66 10UF 25V
R168 10K 0.1%
R167 10K 0.1%
C50 180PF
Fc = 177kHz
R97 4.99K 0.1%
R191 200
R96 4.99K 0.1%
C29 180PF
U7 OP275
V+18A
V-18A
C135 .1UF
C136 .1UF
Fc= 2.9 Hz
C80 22UF 25V
GNDA
GNDD
GNDA_7

RLS 7 IN R - J7 5
RLS 7 IN R + J7 6
RLS 7 IN R SHD J7 4
CALL_AUDIO_-
CALL_AUDIO_+
R24 0 OHM
R25 0 OHM
R23 0 OHM
R22 0 OHM
** : INSTALLED IN MON 2 ASSY ONLY
C64 10UF 25V
C63 10UF 25V
R169 10K 0.1%
R170 10K 0.1%
C51 180PF
R98 4.99K 0.1%
R192 200
R99 4.99K 0.1%
C32 180PF
U7 OP275
C79 22UF 25V
GNDD
GNDA_7

CR
(RLS 1)

V+5A
V-5A
U33 74HC4053M
C134 .1UF
C133 .1UF
R139 4.99K 1%
R140 4.99K 1%
R209 10K
TEL_CR
GNDA_7
GNDA

ST
(RLS 2)

U32 74HC4053M
C132 .1UF
C131 .1UF
R141 4.99K 1%
R138 4.99K 1%
R210 10K
TEL_ST
L_CR_SUM
R_CR_SUM
L_ST_SUM
R_ST_SUM
GNDA_7
GNDA

LOGIC GATE ARRAY
U35
ACT1010

PGM2_ST 1
PGM1_ST 2
PGM1_ST_SW 3
KEEP_ALIVE 4
PGM2_ST_SW 5
EXT3_ST 6
EXT1_ST 7
EXT1_ST_SW 8
EXT2_ST_SW 9
EXT4_ST_SW 10
EXT2_ST 11
EXT4_ST 12
TEL_ST 13
GND1 14
GND2 15
OPEN_1 16
EXT3_ST_SW 17
ST_TLKBK 18
EXT2_CR_SW 19
CUE/TALK_CR 20
VCC2 21
EXT2_CR 22
EXT1_CR 23
CUE/TALK 24
VPP 25
EXT1_CR_SW 26
EXT3_CR 27
PGM2_CR 28
PGM2_CR_SW 29
TELCO_CR_SW 30
PGM1_CR_SW 31
GND3 32
EXT4_CR_SW 33
PGM1_CR 34

TELCO_ST_SW 65
TELCO_ST 67
GND7 66
CR_WARN 64
CR_WARN_INV 63
XO 62
XI 61
XOUT 60
CLKOUT 59
MPRB 58
MPRA 57
DCLK 56
SDI 55
VCC4 54
MODE 53
TEL_CR 52
CLK:N 51
EX POWER REF 50
ST_WARN_INV 49
GND4 48
ST_TLKBK_SW 47
CUE_MUTE 46
ST_WARN 45
CE 44
CR_MUTE 43
CR_MUTE_INV 42
ST_MUTE 41
ST_MUTE_INV 40
CR_MIC_INV 39
VCC3 38
TELCO_CR 37
EXT4_CR 36
EXT3_CR_SW 35

TELCO_ST_SW
TELCO_ST
CR_WARN
CR_WARN_CTL
ST_WARN_CTL
ST_TLKBK_SW
CUE_MUTE
ST_WARN
CR_MUTE
CR_MUTE_CTL
ST_MUTE_CTL
ST_MUTE
ST_MIC_O/L
CR_MIC_O/L
KEEP_ALIVE
TELCO_CR
EXT4_CR
EXT3_CR_SW

TEST CONN
1 J12 PROBE B
2 J12 PROBE A
6 J12 DCLK
3 J12 SDI
4 J12 MODE
5 J12 LOGIC GND

R50 10K
R48 10K
R49 10K
R101 68.1K
C130 .1UF
C129 .1UF
R1 1M
CR1 1N5711
CR2 1N5711
KEEP_ALIVE
V+50
TP3
TP2
R102 1K
R142 10M
Z1 2.4576MHZ
C34 33PF
C33 33PF

CR WARN 1 J14 CR WARNING
ST WARN 2 J14 ST WARNING
CUE MUTE 3 J14 CUE MUTE
ST MUTE 4 J14 ST MUTE
CR MUTE 5 J14 CR MUTE
CUE/TALK 6 J14 CUE/TALK
ST TLKBK SW 7 J14 ST TLKBK SWITCH
ST TLKBK 8 J14 ST TLKBK
R211 10K
R212 10K
R213 10K
R214 10K
R216 10K
R215 10K

V+18A
V+5A
V-18A
V-5A
U34 LM78L05AC
U8 LM79L05AC
C140 .1UF
C139 .1UF
C138 .1UF
C137 .1UF
TP5
TP4

PACIFIC RESEARCH & ENGINEERING CORPORATION

SIZE	DRAWING NUMBER	REV
D	92-965	D
4-15-1998_14:19	SHEET 4 OF 5	

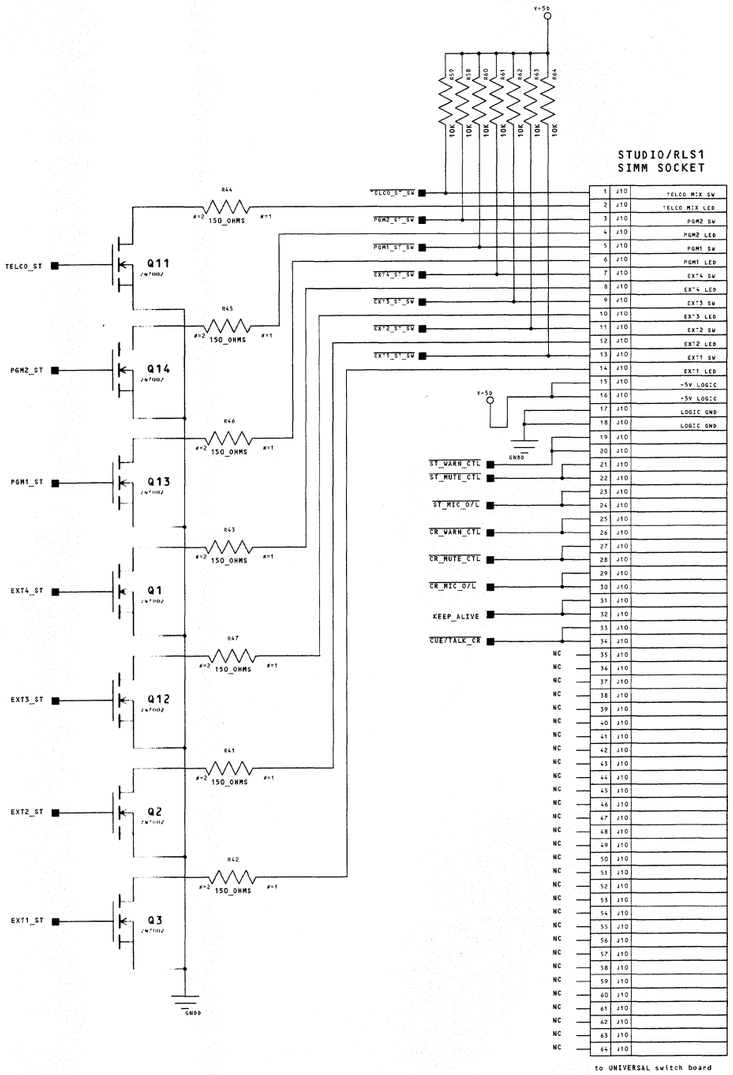

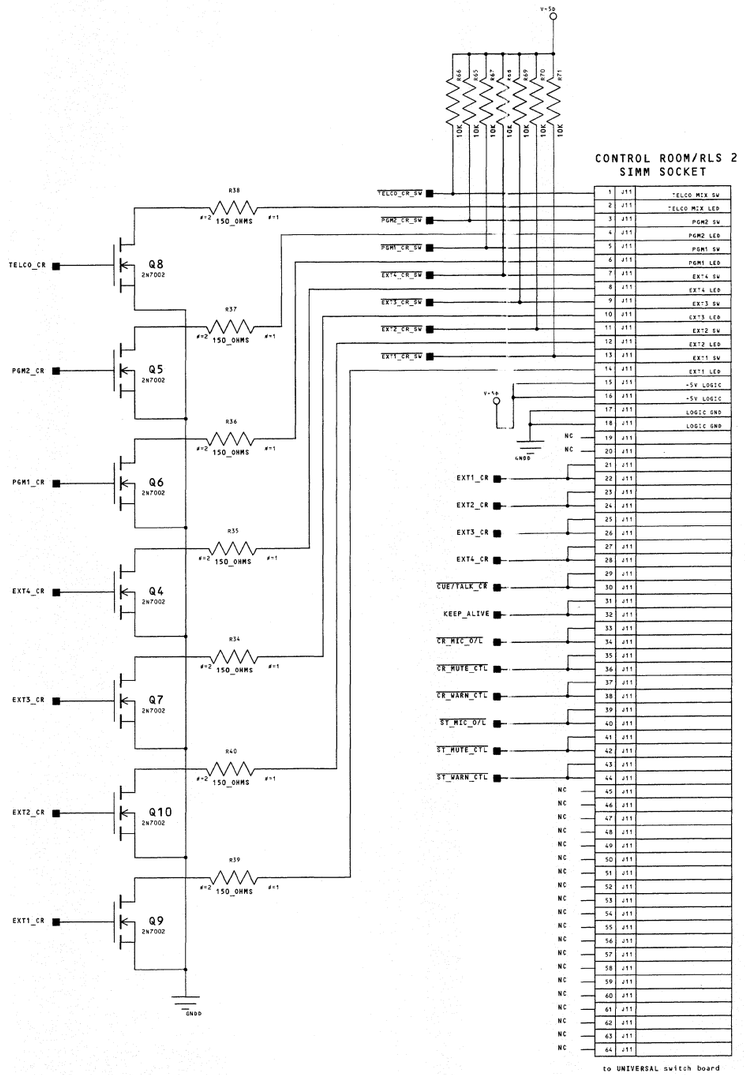

PACIFIC RESEARCH & ENGINEERING CORPORATION		
SIZE D	DRAWING NUMBER 92-965	REV D
4-15-1998_14:07	SHEET 5 OF 5	

REVISIONS				
REV	ECO #	DESCRIPTION	DATE	APPROVAL

DIN CONNECTOR

SERIAL DATA	P1	1
SHIELD	P1	2
FADER REFERENCE HIGH	P1	3
CUE_ON	P1	4
PGM1 ON	P1	5
AUDIO GND	P1	6
AUDIO GND	P1	7
AUDIO GND	P1	8
AUDIO GND	P1	9
+48V PHANTOM	P1	10
+16V AUDIO	P1	11
+16V AUDIO	P1	12
-16V AUDIO	P1	13
-16V AUDIO	P1	14
DSP GO	P1	15
NC	P1	16
NC	P1	17
NC	P1	18
NC	P1	19
NC	P1	20
NC	P1	21
NC	P1	22
LOGIC GND	P1	23
LOGIC GND	P1	24
LOGIC GND	P1	25
+5V LOGIC	P1	26
+5V LOGIC	P1	27
+5V LOGIC	P1	28
+12V LAMP	P1	29
KEEP ALIVE	P1	30
CR WARNING	P1	31
ST WARNING	P1	32
256FS	P1	33
64FS	P1	34
FADER WIPER	P1	35
O/L_ON	P1	36
PGM2 ON	P1	37
AUDIO GND	P1	38
AUDIO GND	P1	39
AUDIO GND	P1	40
AUDIO GND	P1	41
+48V PHANTOM	P1	42
+16V AUDIO	P1	43
+16V AUDIO	P1	44
-16V AUDIO	P1	45
-16V AUDIO	P1	46
*SYSTEM RESET	P1	47
NC	P1	48
NC	P1	49
NC	P1	50
NC	P1	51
NC	P1	52
NC	P1	53
NC	P1	54
LOGIC GND	P1	55
LOGIC GND	P1	56
LOGIC GND	P1	57
+5V LOGIC	P1	58
+5V LOGIC	P1	59
+5V LOGIC	P1	60
+12V LAMP	P1	61
TIMER RESET	P1	62
CR MUTE BUS	P1	63
ST MUTE BUS	P1	64
FS	P1	65
SHIELD	P1	66
FADER REFERENCE LOW	P1	67
FADER ON	P1	68
PGM3 ON	P1	69
AUDIO GND	P1	70
AUDIO GND	P1	71
AUDIO GND	P1	72
AUDIO GND	P1	73
+48V PHANTOM	P1	74
+16V AUDIO	P1	75
+16V AUDIO	P1	76
-16V AUDIO	P1	77
-16V AUDIO	P1	78
FADER START ENABLE	P1	79
NC	P1	80
NC	P1	81
NC	P1	82
NC	P1	83
NC	P1	84
NC	P1	85
NC	P1	86
LOGIC GND	P1	87
LOGIC GND	P1	88
LOGIC GND	P1	89
+5V LOGIC	P1	90
+5V LOGIC	P1	91
+5V LOGIC	P1	92
+12V LAMP	P1	93
CUE/TALK CR	P1	94
CR MIC O/L	P1	95
ST MIC O/L	P1	96

TP2, GNDD, L1 100UH, KEEP ALIVE, SYSTEM RESET, FS, F1 1A, TP1, C33 22/25, C1–C7 .1, V+5D, GNDD

BYPASS FOR U2-U8

DIGITAL RLS1 +	J1	3
DIGITAL RLS1 -	J1	2
DIGITAL RLS1 SHIELD	J1	1
NC	J1	6
NC	J1	5
NC	J1	4

DIGITAL RLS2 +	J2	3
DIGITAL RLS2 -	J2	2
DIGITAL RLS2 SHIELD	J2	1
NC	J2	6
NC	J2	5
NC	J2	4

DIGITAL RLS3 +	J3	3
DIGITAL RLS3 -	J3	2
DIGITAL RLS3 SHIELD	J3	1
NC	J3	6
NC	J3	5
NC	J3	4

DIGITAL RLS4 +	J4	3
DIGITAL RLS4 -	J4	2
DIGITAL RLS4 SHIELD	J4	1
NC	J4	6
NC	J4	5
NC	J4	4

DIGITAL RLS5 +	J5	3
DIGITAL RLS5 -	J5	2
DIGITAL RLS5 SHIELD	J5	1
NC	J5	6
NC	J5	5
NC	J5	4

DIGITAL RLS6 +	J6	3
DIGITAL RLS6 -	J6	2
DIGITAL RLS6 SHIELD	J6	1
NC	J6	6
NC	J6	5
NC	J6	4

DIGITAL RLS7 +	J7	3
DIGITAL RLS7 -	J7	2
DIGITAL RLS7 SHIELD	J7	1
NC	J7	6
NC	J7	5
NC	J7	4

CONNECTED TO MOUNTING HOLE, CHGND

SN75179, U2–U8, R50–R63 JUMPER, R43–R48 110, R19–R23 10K, C13–C26 .33, RLS1_STRM–RLS7_STRM, RLS OUT1, RLS OUT2, R1–R5 51.1, C27–C30 *.33, R64–R67 * JUMPER, T1–T7

3	J8	RLS_OUT1 +
2	J8	RLS_OUT1 -
1	J8	RLS_OUT1 SHIELD
6	J8	NC
5	J8	NC
4	J8	NC

3	J9	RLS_OUT2 +
2	J9	RLS_OUT2 -
1	J9	RLS_OUT2 SHIELD
6	J9	NC
5	J9	NC
4	J9	NC

V+5D, C? .1, SN75179, GNDD

TYPICAL POWER CONNECTION

3. * = COMPONENTS NOT POPULATED
2. ALL CAPACITORS ARE IN MICROFARADS
1. ALL RESISTORS ARE .1W, 1%, 0805 SMT

NOTES: UNLESS OTHERWISE SPECIFIED

APPROVALS	DATE
L. Stanton	2SEPT98

USED ON: DWave

PACIFIC RESEARCH & ENGINEERING CORPORATION

SCHEMATIC

RLS, DIGITAL, DWAVE

SIZE	DRAWING NUMBER	REV
D	92-1012	A

SHEET 1 OF 2

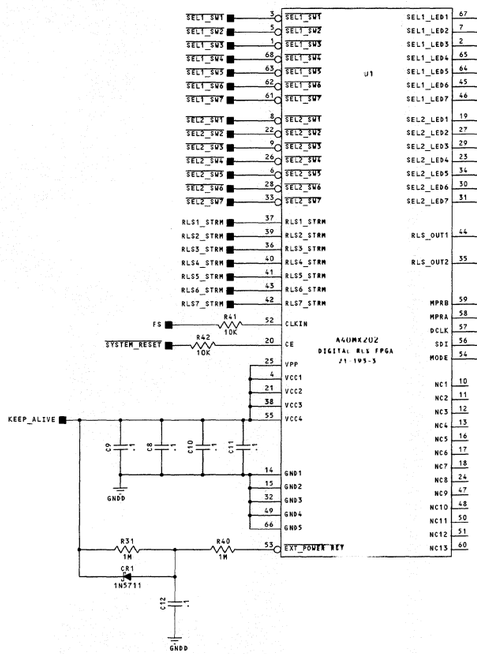

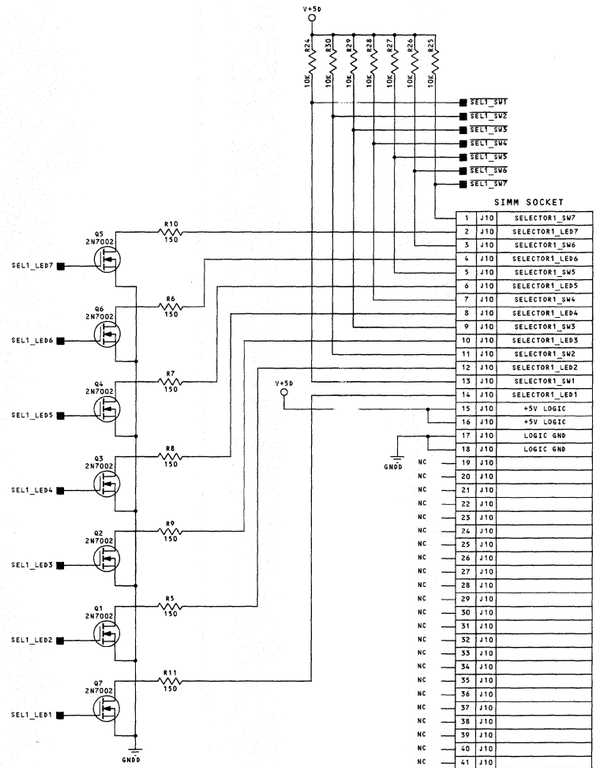

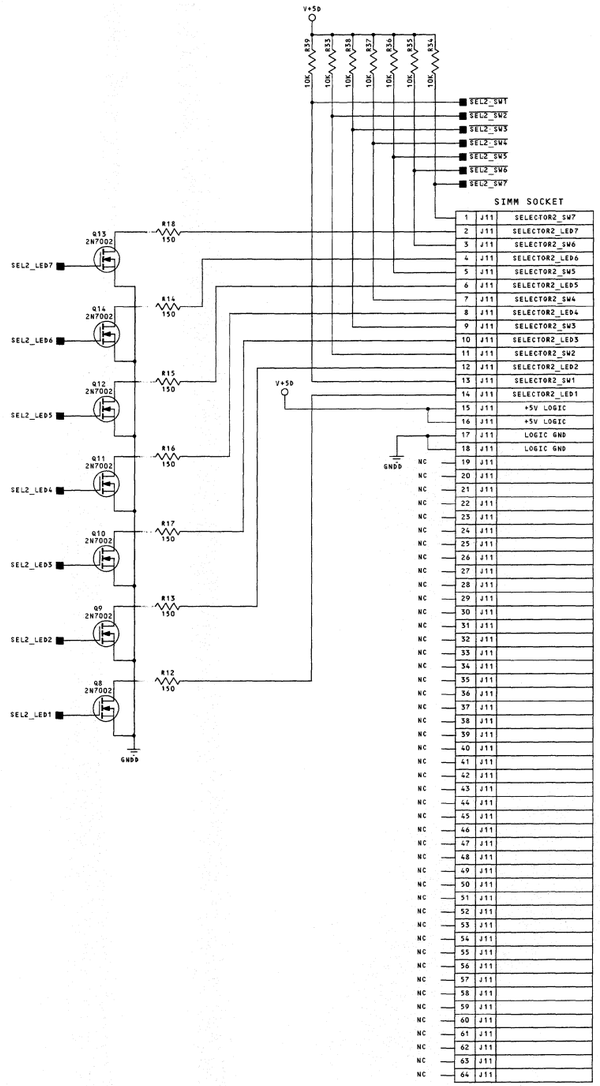

PACIFIC RESEARCH & ENGINEERING CORPORATION		
SIZE D	DRAWING NUMBER 92-1012	REV A
	SHEET 2 OF 2	

REVISIONS				
REV	ECO #	DESCRIPTION	DATE	APPROVAL

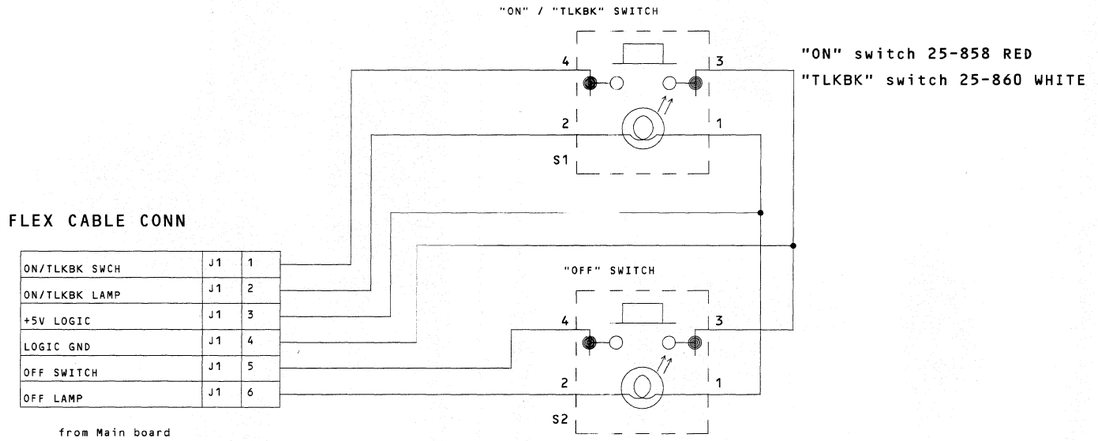

"ON" switch 25-858 RED
"TLKBK" switch 25-860 WHITE

FLEX CABLE CONN

ON/TLKBK SWCH	J1	1
ON/TLKBK LAMP	J1	2
+5V LOGIC	J1	3
LOGIC GND	J1	4
OFF SWITCH	J1	5
OFF LAMP	J1	6

from Main board

NOTES: PCB is single sided.
Widest possible traces with 12mil spacing
When assenbling "ON/OFF" switch board (95-969) S1 is a 25-858.
When assembling "Talkback" switch board (95-970) S1 is a 25-860
and part of pcb with S2 is discarded (breakaway).

APPROVALS	DATE
J DOMBROWSKI	12/5/96
USED ON AirWave	

PACIFIC RESLARCH & ENGINEERING CORPORATION

SCHEMATIC

ON/OFF/TLKBK SWCH BRD

SIZE	DRAWING NUMBER	REV
B	92-969	A

12-13-1996_14:44

SHEET 1 OF 1

REVISIONS				
REV	ECO #	DESCRIPTION	DATE	APPROVAL

SIMM PCB EDGE CONN

SWITCH 1	P1	1
LED 1	P1	2
SWITCH 2	P1	3
LED 2	P1	4
SWITCH 3	P1	5
LED 3	P1	6
SWITCH 4	P1	7
LED 4	P1	8
SWITCH 5	P1	9
LED 5	P1	10
SWITCH 6	P1	11
LED 6	P1	12
SWITCH 7	P1	13
LED 7	P1	14
+5V LOGIC	P1	15
+5V LOGIC	P1	16
LOGIC GND	P1	17
LOGIC GND	P1	18
	P1	19 — NC
	P1	20 — NC
	P1	21 — NC
	P1	22 — NC
	P1	23 — NC
	P1	24 — NC
	P1	25 — NC
	P1	26 — NC
	P1	27 — NC
	P1	28 — NC
	P1	29 — NC
	P1	30 — NC
	P1	31 — NC
	P1	32 — NC

from Main board

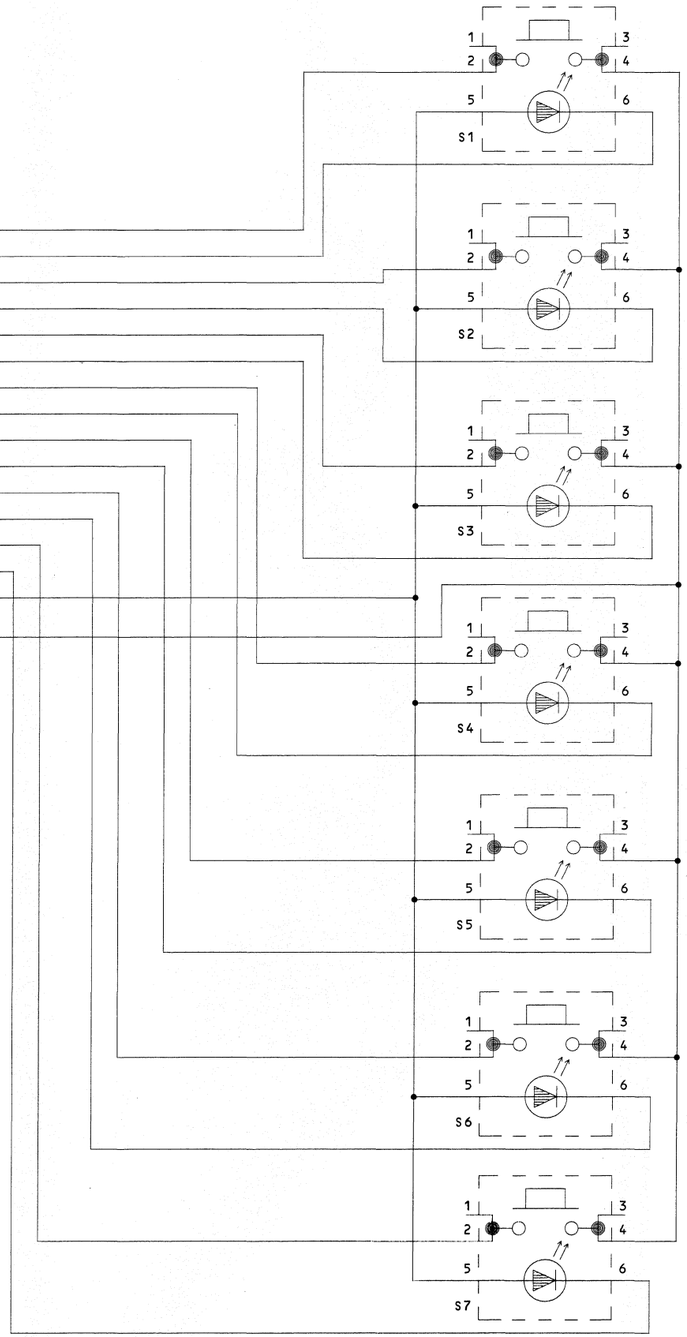

	P1	33 — NC
	P1	34 — NC
	P1	35 — NC
	P1	36 — NC
	P1	37 — NC
	P1	38 — NC
	P1	39 — NC
	P1	40 — NC
	P1	41 — NC
	P1	42 — NC
	P1	43 — NC
	P1	44 — NC
	P1	45 — NC
	P1	46 — NC
	P1	47 — NC
	P1	48 — NC
	P1	49 — NC
	P1	50 — NC
	P1	51 — NC
	P1	52 — NC
	P1	53 — NC
	P1	54 — NC
	P1	55 — NC
	P1	56 — NC
	P1	57 — NC
	P1	58 — NC
	P1	59 — NC
	P1	60 — NC
	P1	61 — NC
	P1	62 — NC
	P1	63 — NC
	P1	64 — NC

NOTES: PCB is single sided.

APPROVALS	DATE
J DOMBROWSKI	12/5/96
USED ON AirWave	

PACIFIC RESEARCH & ENGINEERING CORPORATION

SCHEMATIC

N/FTLKBA SBWFCHRSD1AKD

SIZE	DRAWING NUMBER	REV
D	92-960	A

12-14-1996_14:07

SHEET 1 OF 1

REVISIONS				
REV	ECO #	DESCRIPTION	DATE	APPROVAL
B	4537	TIE AGND AND DGND AT THE ADC (U5)	1-13-99	L. Stanton

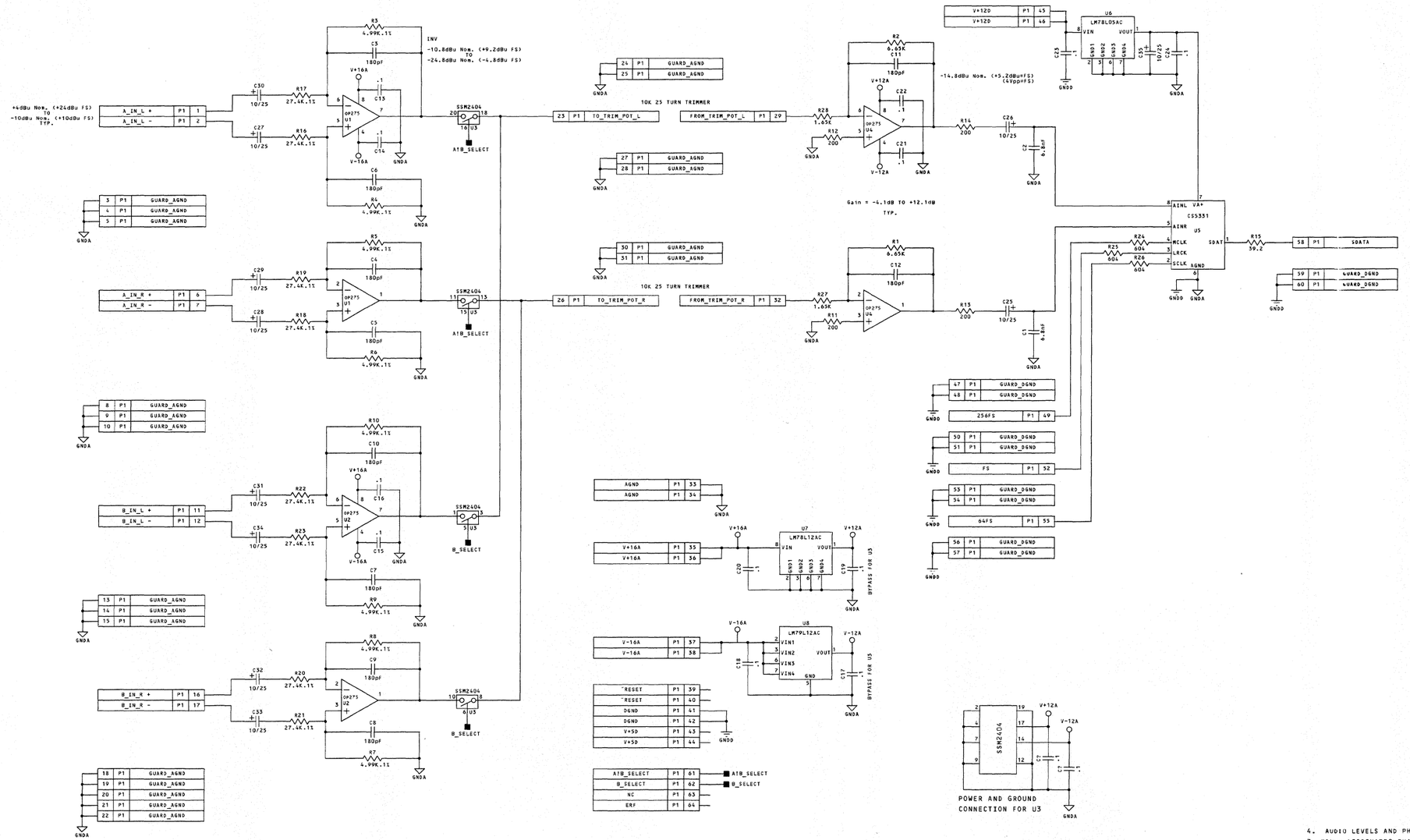

4. AUDIO LEVELS AND PHASES ARE TYPICAL FOR ALL CHANNELS
3. "INV" DESIGNATES PHASE INVERSION OF THE SIGNAL
2. CAPACITORS VALUES ARE IN MICROFARADS.
1. RESISTORS ARE 1/10W, 1%.

NOTES: UNLESS OTHERWISE SPECIFIED

APPROVALS	DATE
L. STANTON	17JUL98

PACIFIC RESEARCH & ENGINEERING CORPORATION

SCHEMATIC

A/B DIFF INPUT, A/D CONVERTER SIMM, DWAVE

SIZE	DRAWING NUMBER	REV
D	92-1001	B

SHEET 1 OF 1

USED ON 99-1004-1

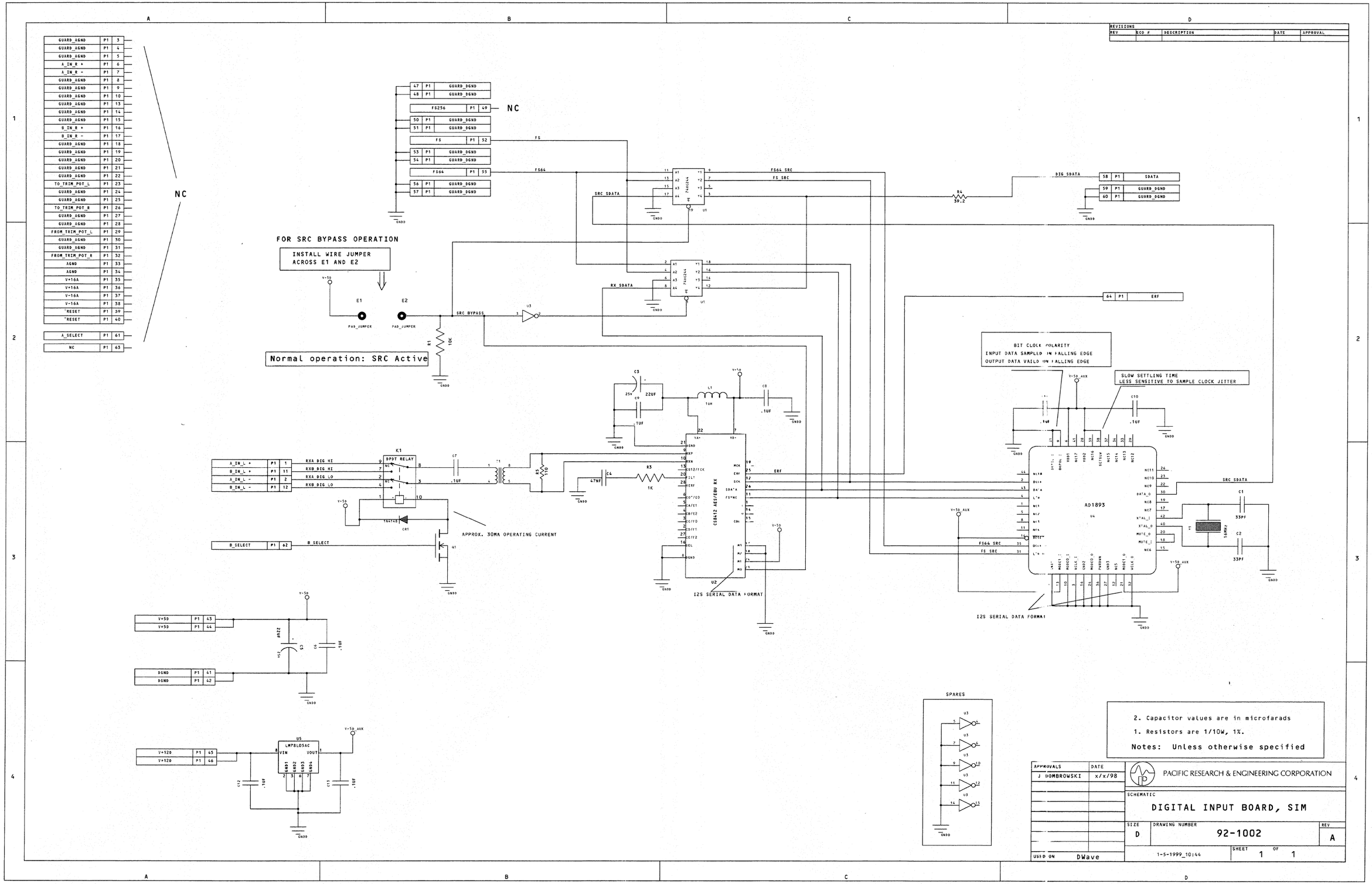
REVISIONS
REV
ECO #
DESCRIPTION
DATE
APPROVAL
GUARD_AGND P1 3
GUARD_AGND P1 4
GUARD_AGND P1 5
A_IN_R + P1 6
A_IN_R - P1 7
GUARD_AGND P1 8
GUARD_AGND P1 9
GUARD_AGND P1 10
GUARD_AGND P1 13
GUARD_AGND P1 14
GUARD_AGND P1 15
B_IN_R + P1 16
B_IN_R - P1 17
GUARD_AGND P1 18
GUARD_AGND P1 19
GUARD_AGND P1 20
GUARD_AGND P1 21
GUARD_AGND P1 22
TO_TRIM_POT_L P1 23
GUARD_AGND P1 24
GUARD_AGND P1 25
TO_TRIM_POT_R P1 26
GUARD_AGND P1 27
GUARD_AGND P1 28
FROM_TRIM_POT_L P1 29
GUARD_AGND P1 30
GUARD_AGND P1 31
FROM_TRIM_POT_R P1 32
AGND P1 33
AGND P1 34
V+16A P1 35
V+16A P1 36
V-16A P1 37
V-16A P1 38
~RESET P1 39
~RESET P1 40
A_SELECT P1 61
NC P1 63
NC
47 P1 GUARD_DGND
48 P1 GUARD_DGND
FS256 P1 49
NC
50 P1 GUARD_DGND
51 P1 GUARD_DGND
FS P1 52
53 P1 GUARD_DGND
54 P1 GUARD_DGND
FS64 P1 55
56 P1 GUARD_DGND
57 P1 GUARD_DGND
FS
FS64
SRC SDATA
74HC244
FS64 SRC
FS SRC
DIG SDATA
58 P1 SDATA
59 P1 GUARD_DGND
60 P1 GUARD_DGND
R4
39.2
FOR SRC BYPASS OPERATION
INSTALL WIRE JUMPER
ACROSS E1 AND E2
E1
E2
PAD_JUMPER
PAD_JUMPER
SRC BYPASS
U3
R1
10K
Normal operation: SRC Active
RX SDATA
64 P1 ERF
BIT CLOCK POLARITY
INPUT DATA SAMPLED ON FALLING EDGE
OUTPUT DATA VAILD ON FALLING EDGE
SLOW SETTLING TIME
LESS SENSITIVE TO SAMPLE CLOCK JITTER
C3
25V
22UF
C9
.1UF
L1
1UH
C8
.1UF
C10
.1UF
K1
DPDT RELAY
A_IN_L + P1 1
B_IN_L + P1 11
A_IN_L - P1 2
B_IN_L - P1 12
RXA DIG HI
RXB DIG HI
RXA DIG LO
RXB DIG LO
C7
.1UF
R5
110
C4
47NF
R3
1K
CS8412 AES/EBU RX
ERF
AD1893
U4
SRC SDATA
C1
33PF
C2
33PF
Y1
16MHz
APPROX. 30MA OPERATING CURRENT
B_SELECT P1 62
B_SELECT
Q1
I2S SERIAL DATA FORMAT
I2S SERIAL DATA FORMAT
V+5D P1 43
V+5D P1 44
DGND P1 41
DGND P1 42
22UF
C5
C6
.1UF
V+12D P1 45
V+12D P1 46
U5
LM78L05AC
VIN
VOUT
C12
.1UF
C13
.1UF
SPARES
2. Capacitor values are in microfarads
1. Resistors are 1/10W, 1%.
Notes: Unless otherwise specified
APPROVALS
DATE
J DOMBROWSKI
x/x/98
PACIFIC RESEARCH & ENGINEERING CORPORATION
SCHEMATIC
DIGITAL INPUT BOARD, SIM
SIZE
D
DRAWING NUMBER
92-1002
REV
A
USED ON
DWave
1-5-1999_10:44
SHEET
1
OF
1

REVISIONS				
REV	ECO #	DESCRIPTION	DATE	APPROVAL
B	4356	U13-U18 ADJ PIN TO 200 OHM RESISTOR	29JAN99	L. STANTON

EXTERNAL LOGIC CONNECTOR

NC J1 25
AUDIO RESET+ J1 22
AUDIO RESET- J1 19
READY+ J1 24
READY- J1 21
OPTO +V IN J1 18
ON J1 7
OFF J1 8
COUGH J1 9
EXT CR TLKBK J1 20

CR7 1N4148 — R6 200 — U18 LM317LD (OUT2, OUT3, OUT6, OUT7 ADJ; VIN) — 4N25S U12
CR3 1N4148 — R5 200 — U17 LM317LD — 4N25S U11
CR4 1N4148 — R4 200 — U16 LM317LD — 4N25S U10
CR5 1N4148 — R3 200 — U15 LM317LD — 4N25S U9
CR6 1N4148 — R2 200 — U14 LM317LD — 4N25S U8
CR7 1N4148 — R1 200 — U13 LM317LD — 4N25S U7

19 P1 *READY_DUAL
21 P1 *RTN_OFF_DUAL
7 P1 *EXT_ON_DUAL
8 P1 *EXT_OFF_DUAL
9 P1 *COUGH_DUAL
20 P1 *EXT_CR_TLKBK_DUAL
18 P1 *DUAL_LOGIC_KEY
GNDD

B-DUAL_EN P1 15 — Q1 2N7002 — GNDD

EXTERNAL LOGIC CONNECTOR

START_PULSE_DUAL P1 5 — U4 AQV212 RELAY — 5 J1 START PULSE
STOP_PULSE_DUAL P1 4 — U3 AQV212 RELAY — 4 J1 STOP PULSE; 13 J1 COMMAND COMMON
ON_LAMP_DUAL P1 17 — U1 AQV212 RELAY — 17 J1 ON TALLY
OFF_LAMP_DUAL P1 16 — U5 AQV212 RELAY — 16 J1 OFF TALLY
V+5D — CR1 1N4148 — R7 1K — U2 AQV212 RELAY — 15 J1 LGC ACT TALLY; 14 J1 TALLY COMMON
V+5D — R8 1K — U6 AQV212 RELAY — 6 J1 +5 LOGIC; 10 J1 +5 LOGIC; 11 J1 +5 LOGIC; 12 J1 +5 LOGIC
J7 J8 — 1 J1 LOGIC GND; 2 J1 LOGIC GND; 3 J1 LOGIC GND — GNDD

V+5 LOGIC_DUAL P1 6
V+5 LOGIC_DUAL P1 10
V+5 LOGIC_DUAL P1 11
V+5 LOGIC_DUAL P1 12
LOGIC GND_DUAL P1 1
LOGIC GND_DUAL P1 2
LOGIC GND_DUAL P1 3
GNDD
V+5D
V+5D P1 22
V+5D P1 23
V+5D P1 24
NC P1 13
NC P1 14

APPROVALS	DATE
L. Stanton	13JAN99

PACIFIC RESEARCH & ENGINEERING CORPORATION

SCHEMATIC
LOGIC INTERFACE, DUAL, DWAVE

SIZE	DRAWING NUMBER	REV
D	92-1003	B

USED ON 99-1004-1,2 — 1-29-1999_8:57 — SHEET 1 OF 1

REVISIONS				
REV	ECO	DESCRIPTION	DATE	APPROVED
E	3303	REVISED AND REDRAWN	13MAR91	
F	3544	SEE ECO	5OCT92	
G	3683	SEE ECO	28JAN94	STANTON
H	4013	SCHEMATIC CORRECTIONS		

4.FOR PCA SEE DRAWING 95-895 LATEST REV.
3.ALL DIODES ARE 1N914B.
2.ALL CAPACITORS ARE MEASURED IN MICROFARADS.
1.ALL RESISTORS ARE 1/4W, 1%.
NOTES ;UNLESS OTHERWISE SPECIFIED.

APPROVALS	DATE
DRAWN	10/17/95
CHECKED	

PACIFIC RESEARCH & ENGINEERING CORP

SCHEMATIC

MICRO CLOCK/TIMER

SIZE	DRAWING No.	REV
D	92-895	H

95-895 USED ON

APPLICATION

SHEET 1 OF 1

REVISIONS			
REV	ECO #	DESCRIPTION	DATE APPROVAL
A	3988	PCB AND SILKSCREEN CHANGES	2/28/97 J. DOMBROWSKI

DIN CONNECTOR

PGM1 MAIN L	P1	1	NC
PGM1 TELCO L	P1	2	NC
PGM2 MAIN L	P1	3	NC
PGM2 TELCO L	P1	4	NC
O/L SUM BUS	P1	5	NC
AUDIO GND	P1	6	NC
AUDIO GND	P1	7	NC
AUDIO GND	P1	8	NC
AUDIO GND	P1	9	NC
+48V PHANTOM	P1	10	NC
-18V AUDIO	P1	11	NC
+18V AUDIO	P1	12	NC
-18V AUDIO	P1	13	NC
-18V AUDIO	P1	14	NC
PGM1/TELCO L	P1	15	NC
PGM2/TELCO L	P1	16	NC
	P1	17	NC
	P1	18	NC
	P1	19	NC
	P1	20	NC
	P1	21	NC
	P1	22	NC
LOGIC GND	P1	23	
LOGIC GND	P1	24	
LOGIC GND	P1	25	
+5V LOGIC	P1	26	
+5V LOGIC	P1	27	
+5V LOGIC	P1	28	
+12V LAMP	P1	29	
KEEP ALIVE	P1	30	
CR WARNING	P1	31	NC
ST WARNING	P1	32	NC
	P1	33	NC
	P1	34	NC
	P1	35	NC
	P1	36	NC
	P1	37	NC
AUDIO GND	P1	38	NC
AUDIO GND	P1	39	NC
AUDIO GND	P1	40	NC
AUDIO GND	P1	41	NC
+48V PHANTOM	P1	42	NC
+18V AUDIO	P1	43	NC
-18V AUDIO	P1	44	NC
-18V AUDIO	P1	45	NC
-18V AUDIO	P1	46	NC
	P1	47	NC
	P1	48	NC
PGM1 OUT L -	P1	49	NC
PGM2 OUT L -	P1	50	NC
PGM1 OUT R -	P1	51	NC
PGM2 OUT R -	P1	52	NC
SEND/CALLER -	P1	53	NC
CALL AUDIO -	P1	54	NC
LOGIC GND	P1	55	
LOGIC GND	P1	56	
LOGIC GND	P1	57	
+5V LOGIC	P1	58	
+5V LOGIC	P1	59	
+5V LOGIC	P1	60	
+12V LAMP	P1	61	
TIMER RESET	P1	62	
CR MUTE BUS	P1	63	NC
ST MUTE BUS	P1	64	NC
PGM1 MAIN R	P1	65	NC
PGM1 TELCO R	P1	66	NC
PGM2 MAIN R	P1	67	NC
PGM2 TELCO R	P1	68	NC
CUE SUM BUS	P1	69	NC
AUDIO GND	P1	70	NC
AUDIO GND	P1	71	NC
AUDIO GND	P1	72	NC
AUDIO GND	P1	73	NC
+48V PHANTOM	P1	74	NC
+18V AUDIO	P1	75	NC
-18V AUDIO	P1	76	NC
-18V AUDIO	P1	77	NC
-18V AUDIO	P1	78	NC
PGM1/TELCO R	P1	79	NC
PGM2/TELCO R	P1	80	NC
PGM1 OUT L +	P1	81	NC
PGM2 OUT L +	P1	82	NC
PGM1 OUT R +	P1	83	NC
PGM2 OUT R +	P1	84	NC
SEND/CALLER +	P1	85	NC
CALL AUDIO +	P1	86	NC
LOGIC GND	P1	87	
LOGIC GND	P1	88	
LOGIC GND	P1	89	
+5V LOGIC	P1	90	
+5V LOGIC	P1	91	
+5V LOGIC	P1	92	
+12V LAMP	P1	93	
CUE/TALK CR	P1	94	NC
CR MIC O/L	P1	95	NC
ST MIC O/L	P1	96	NC

to MOTHER board

TP3 GNDD

KEEP ALIVE — TP5 — D3 1N4148

BATTERY BACK UP

"AA" Battery Clip — BT1 — "AA"
"AA" Battery Clip — BT2 — "AA"
"AA" Battery Clip — BT3 — "AA"
"AA" Battery Clip — BT4 — "AA"
GNDD

V+50 — R10 10K

TIMER RESET BUS — U1 74HC132

U3 4N32W RELAY

R11 1K

REMOTE TIMER CONNECTOR

1	J2	RESET START TMR COMMAND
2	J2	
3	J2	RESET START TMR COMMON

V+12D

TIMER CONNECTOR

1	J1	LOGIC GROUND
2	J1	LOGIC +12V SUPPLY
3	J1	START COMMAND
4	J1	STOP COMMAND
5	J1	RESET COMMAND
6	J1	HOLD COMMAND
NC	7	J1
NC	8	J1

to Meter Housing

D1 1N4148
D2 1N4148

AUTO

TP4

R1 150
R2 150
R3 150
R4 150

SIMM SOCKET

1	J3	STOP SW
2	J3	STOP LED
3	J3	START SW
4	J3	START LED
5	J3	HOLD SW
6	J3	HOLD LED
7	J3	RESET SW
8	J3	RESET LED
NC	9	J3
NC	10	J3
11	J3	AUTO SW
12	J3	AUTO LED
NC	13	J3
NC	14	J3
15	J3	+5V LOGIC
16	J3	+5V LOGIC
17	J3	LOGIC GND
18	J3	LOGIC GND
NC	19	J3
NC	20	J3
NC	21	J3
NC	22	J3
NC	23	J3
NC	24	J3
NC	25	J3
NC	26	J3
NC	27	J3
NC	28	J3
NC	29	J3
NC	30	J3
NC	31	J3
NC	32	J3
NC	33	J3
NC	34	J3
NC	35	J3
NC	36	J3
NC	37	J3
NC	38	J3
NC	39	J3
NC	40	J3
NC	41	J3
NC	42	J3
NC	43	J3
NC	44	J3
NC	45	J3
NC	46	J3
NC	47	J3
NC	48	J3
NC	49	J3
NC	50	J3
NC	51	J3
NC	52	J3
NC	53	J3
NC	54	J3
NC	55	J3
NC	56	J3
NC	57	J3
NC	58	J3
NC	59	J3
NC	60	J3
NC	61	J3
NC	62	J3
NC	63	J3
NC	64	J3

to UNIVERSAL switch board

AUTO SWITCH LATCH

V+50 — R7 10K — R6 150 — U1 74HC132 — U2 74HC74 (PRE, D, CLK, Q, CLR) — Q1 2N7002 — R5 150

C3 .1UF — GNDD

R9 68.1K

R8 1M — CR1 1N5711 — C5 .1UF — GNDD

KEEP_ALIVE — C2 .1UF — U2 74HC74 — C4 .1UF — U1 74HC132 — GNDD

F2 — TP2 — V+12D — C8 .1UF — C1 22UF 25V — GNDD

F1 — TP1 — V+50 — C7 .1UF — C6 22UF 25V — GNDD

APPROVALS		DATE	PACIFIC RESEARCH & ENGINEERING CORPORATION
J DOMBROWSKI		12/5/96	
			SCHEMATIC
			TIMER CONTROL BOARD
			SIZE D — DRAWING NUMBER 92-960 — REV B
USED ON	AirWave		5-1-1997_15:45 — SHEET 1 OF 1

REVISIONS				
REV	ECO #	DESCRIPTION	DATE	APPROVAL

BYPASS FOR U1, U2, U7

V+5D
C6 0.1
C7 0.1
C12 0.1
GNDD

X1
4 MHZ
C2 22PF
C1 22PF
R24 10M
GNDD

CATHODES
KD0
KD1
KD2
KD3
KD4
KD5
KD6
KD7

F2 T.35A
L1 33UH
C3 220 16V
F1 T.35A
L2 270UH
C5 0.1
C10 220 16V
C11 220 16V
LED_GND
LEDPWR

+5V LOGIC	J1	1
LED POWER	J1	2
LOGIC GND	J1	3
LED/SHLD GND	J1	4
LED/SHLD GND	J1	5
DISPLAY SERIAL DATA 1	J1	6
DISPLAY SERIAL DATA 2	J1	7
DISPLAY VU7'PPM	J1	8
*PGM2/PGM3	J1	9
*SYSTEM RESET	J1	10

R26 1K 1%

MC68HC705C8ACFN
22-54-1
U1

ANODES
AD0
AD1
AD2
AD3
AD4
AD5
AD6
AD7
AD15
AD14
AD13
AD12
AD11
AD10
AD9
AD8

C4 0.01
R27 1K 1%
R28 1K 1%

R25 43.2K
R32 14.5K
C15 0.01
C13 0.1
C14 0.1
U8 LM555
R34 27
2 KHz @ 80% DUTY CYCLE

MINTEN
TO PAGE 2, ZONE D3

LEDPWR
PPM D18 GREEN
PPM D19 GREEN
VU D15 YELLOW
VU D16 YELLOW
VU D17 YELLOW
VU D20 YELLOW
R51 47
R23 47
R22 47
R21 47
R20 47
R19 47

U2 74HC02
R29 1K 1%
Q2 PN2222
R30 1K 1%
Q1 PN2222

PGM2 D22 YELLOW
PGM3 D21 YELLOW
R36 47
R35 47
U7 74HC02
R37 1K 1%
Q4 PN2222
R38 1K 1%
Q3 PN2222

3. CAPACITORS ARE IN MICROFARADS
2. RESISTORS ARE IN OHMS
1. ALL RESISTORS ARE 1/4W, 5%
UNLESS OTHERWISE NOTED:

APPROVALS	DATE
L. STANTON	26AUG98

USED ON: DWAVE

PACIFIC RESEARCH & ENGINEERING CORPORATION

SCHEMATIC

BARGRAPH METER BOARD, DWAVE

SIZE	DRAWING NUMBER	REV
D	92-1011	A

1-15-1999_16:34 | SHEET 1 OF 2

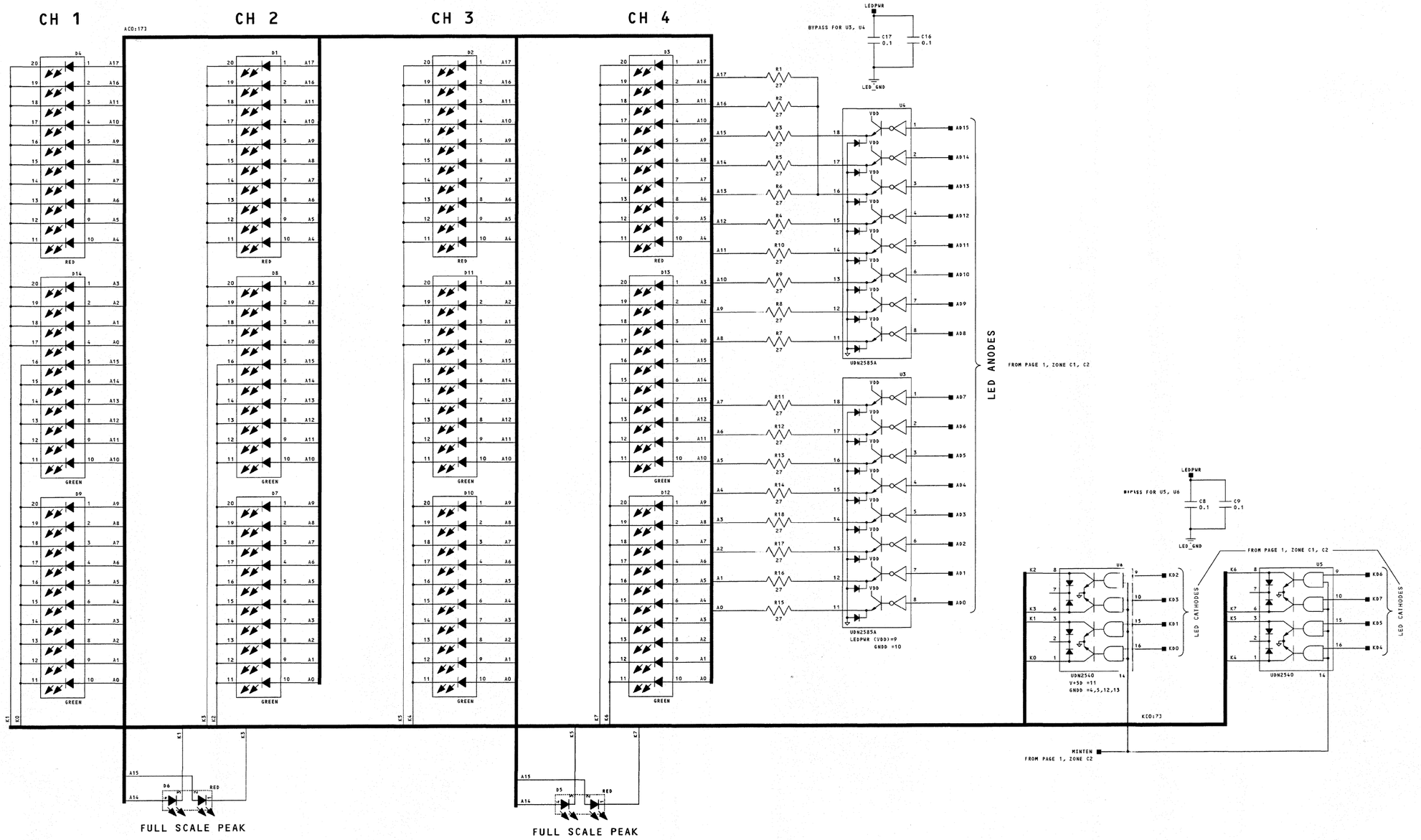

PACIFIC RESEARCH & ENGINEERING CORPORATION		
SIZE D	DRAWING NUMBER 92-1011	REV A
1-15-1999_16:34	SHEET 2 OF 2	

REVISIONS				
REV	ECO #	DESCRIPTION	DATE	APPROVAL
B	4361	Add termination components	3/10/99	L. Stanton

TIMER CONTROL

C2 47pF, C3 47pF, C1 47pF, R2 100, R3 100, R1 100, GND

P1		P2	
	1	1	
	2	2	
	3	3	
	4	4	
	5	5	
AUDIO GND	6	6	AUDIO GND
AUDIO GND	7	7	AUDIO GND
AUDIO GND	8	8	AUDIO GND
AUDIO GND	9	9	AUDIO GND
+48V PHANTOM	10	10	+48V PHANTOM
-16V AUDIO	11	11	-16V AUDIO
-16V AUDIO	12	12	-16V AUDIO
-16V AUDIO	13	13	-16V AUDIO
-16V AUDIO	14	14	-16V AUDIO
	15	15	
	16	16	
	17	17	
	18	18	
	19	19	
	20	20	
	21	21	
	22	22	
LOGIC GND	23	23	LOGIC GND
LOGIC GND	24	24	LOGIC GND
LOGIC GND	25	25	LOGIC GND
+5V LOGIC	26	26	+5V LOGIC
-5V LOGIC	27	27	+5V LOGIC
-5V LOGIC	28	28	+5V LOGIC
+12V LAMP	29	29	+12V LAMP
KEEP ALIVE	30	30	KEEP ALIVE
CR WARNING	31	31	CR WARNING
ST WARNING	32	32	ST WARNING
	33	33	
	34	34	
	35	35	
	36	36	
	37	37	
AUDIO GND	38	38	AUDIO GND
AUDIO GND	39	39	AUDIO GND
AUDIO GND	40	40	AUDIO GND
AUDIO GND	41	41	AUDIO GND
+48V PHANTOM	42	42	+48V PHANTOM
-16V AUDIO	43	43	-16V AUDIO
-16V AUDIO	44	44	-16V AUDIO
-16V AUDIO	45	45	-16V AUDIO
-16V AUDIO	46	46	-16V AUDIO
	47	47	
	48	48	
	49	49	1 -
	50	50	2 -
	51	51	3 -
	52	52	4 -
	53	53	5 -
	54	54	6 -
LOGIC GND	55	55	LOGIC GND
LOGIC GND	56	56	LOGIC GND
LOGIC GND	57	57	LOGIC GND
+5V LOGIC	58	58	-5V LOGIC
+5V LOGIC	59	59	-5V LOGIC
+5V LOGIC	60	60	-5V LOGIC
+12V LAMP	61	61	-12V LAMP
TIMER RESET	62	62	TIMER RESET
CR MUTE BUS	63	63	CR MUTE BUS
ST MUTE BUS	64	64	ST MUTE BUS
	65	65	
	66	66	
	67	67	
	68	68	
	69	69	
AUDIO GND	70	70	AUDIO GND
AUDIO GND	71	71	AUDIO GND
AUDIO GND	72	72	AUDIO GND
AUDIO GND	73	73	AUDIO GND
+48V PHANTOM	74	74	+48V PHANTOM
+16V AUDIO	75	75	-16V AUDIO
+16V AUDIO	76	76	-16V AUDIO
-16V AUDIO	77	77	-16V AUDIO
-16V AUDIO	78	78	-16V AUDIO
	79	79	FADER START ENABLE
	80	80	
	81	81	1 -
	82	82	2 -
	83	83	3 -
	84	84	4 -
	85	85	5 -
	86	86	6 -
LOGIC GND	87	87	LOGIC GND
LOGIC GND	88	88	LOGIC GND
LOGIC GND	89	89	LOGIC GND
+5V LOGIC	90	90	-5V LOGIC
+5V LOGIC	91	91	-5V LOGIC
+5V LOGIC	92	92	-5V LOGIC
+12V LAMP	93	93	-12V LAMP
CUE/TALK CR	94	94	CUE/TALK CR
CR MIC O/L	95	95	CR MIC O/L
ST MIC O/L	96	96	ST MIC O/L

LINE INPUT

SDATA_1, CUE_ON_1, PGM1_ON_1, FADER_WIPER_1, O/L_ON_1, PGM2_ON_1, FADER_ON_1, PGM3_ON_1

P3		
1	SERIAL DATA 1	1
2	SHIELD	2
3	FADER REFERENCE HIGH	3
4	CUE ON 1	4
5	PGM1 ON 1	5
6	AUDIO GND	6
7	AUDIO GND	7
8	AUDIO GND	8
9	AUDIO GND	9
10	+48V PHANTOM	10
11	-16V AUDIO	11
12	-16V AUDIO	12
13	-16V AUDIO	13
14	-16V AUDIO	14
15	DSP GO	15
16		16
17		17
18		18
19		19
20		20
21		21
22		22
23	LOGIC GND	23
24	LOGIC GND	24
25	LOGIC GND	25
26	+5V LOGIC	26
27	+5V LOGIC	27
28	+5V LOGIC	28
29	+12V LAMP	29
30	KEEP ALIVE	30
31	CR WARNING	31
32	ST WARNING	32
33	256FS	33
34	64FS	34
35	FADER WIPER 1	35
36	O/L ON 1	36
37	PGM2 ON 1	37
38	AUDIO GND	38
39	AUDIO GND	39
40	AUDIO GND	40
41	AUDIO GND	41
42	+48V PHANTOM	42
43	-16V AUDIO	43
44	-16V AUDIO	44
45	-16V AUDIO	45
46	-16V AUDIO	46
47	"SYSTEM RESET"	47
48		48
49	1 -	49
50	2 -	50
51	3 -	51
52	4 -	52
53	5 -	53
54	6 -	54
55	LOGIC GND	55
56	LOGIC GND	56
57	LOGIC GND	57
58	+5V LOGIC	58
59	+5V LOGIC	59
60	+5V LOGIC	60
61	+12V LAMP	61
62	TIMER RESET	62
63	CR MUTE BUS	63
64	ST MUTE BUS	64
65	FS	65
66	SHIELD	66
67	FADER REFERENCE LOW	67
68	FADER ON 1	68
69	PGM3 ON 1	69
70	AUDIO GND	70
71	AUDIO GND	71
72	AUDIO GND	72
73	AUDIO GND	73
74	+48V PHANTOM	74
75	+16V AUDIO	75
76	+16V AUDIO	76
77	-16V AUDIO	77
78	-16V AUDIO	78
79	FADER START ENABLE	79
80		80
81	1 -	81
82	2 -	82
83	3 -	83
84	4 -	84
85	5 -	85
86	6 -	86
87	LOGIC GND	87
88	LOGIC GND	88
89	LOGIC GND	89
90	+5V LOGIC	90
91	+5V LOGIC	91
92	+5V LOGIC	92
93	+12V LAMP	93
94	CUE/TALK CR	94
95	CR MIC O/L	95
96	ST MIC O/L	96

LINE INPUT

SDATA_2, CUE_ON_2, PGM1_ON_2, FADER_WIPER_2, O/L_ON_2, PGM2_ON_2, FADER_ON_2, PGM3_ON_2

P4		
1	SERIAL DATA 2	1
2	SHIELD	2
3	FADER REFERENCE HIGH	3
4	CUE ON 2	4
5	PGM1 ON 2	5
6	AUDIO GND	6
7	AUDIO GND	7
8	AUDIO GND	8
9	AUDIO GND	9
10	+48V PHANTOM	10
11	-16V AUDIO	11
12	-16V AUDIO	12
13	-16V AUDIO	13
14	-16V AUDIO	14
15	DSP GO	15
16		16
17		17
18		18
19		19
20		20
21		21
22		22
23	LOGIC GND	23
24	LOGIC GND	24
25	LOGIC GND	25
26	+5V LOGIC	26
27	-5V LOGIC	27
28	-5V LOGIC	28
29	-12V LAMP	29
30	KEEP ALIVE	30
31	CR WARNING	31
32	ST WARNING	32
33	256FS	33
34	64FS	34
35	FADER WIPER 2	35
36	O/L ON 2	36
37	PGM2 ON 2	37
38	AUDIO GND	38
39	AUDIO GND	39
40	AUDIO GND	40
41	AUDIO GND	41
42	+48V PHANTOM	42
43	+16V AUDIO	43
44	-16V AUDIO	44
45	-16V AUDIO	45
46	-16V AUDIO	46
47	"SYSTEM RESET"	47
48		48
49	1 -	49
50	2 -	50
51	3 -	51
52	4 -	52
53	5 -	53
54	6 -	54
55	LOGIC GND	55
56	LOGIC GND	56
57	LOGIC GND	57
58	-5V LOGIC	58
59	-5V LOGIC	59
60	-5V LOGIC	60
61	-12V LAMP	61
62	TIMER RESET	62
63	CR MUTE BUS	63
64	ST MUTE BUS	64
65	FS	65
66	SHIELD	66
67	FADER REFERENCE LOW	67
68	FADER ON 2	68
69	PGM3 ON 2	69
70	AUDIO GND	70
71	AUDIO GND	71
72	AUDIO GND	72
73	AUDIO GND	73
74	-48V PHANTOM	74
75	+16V AUDIO	75
76	-16V AUDIO	76
77	-16V AUDIO	77
78	-16V AUDIO	78
79	FADER START ENABLE	79
80		80
81	1 -	81
82	2 -	82
83	3 -	83
84	4 -	84
85	5 -	85
86	6 -	86
87	LOGIC GND	87
88	LOGIC GND	88
89	LOGIC GND	89
90	+5V LOGIC	90
91	+5V LOGIC	91
92	+5V LOGIC	92
93	+12V LAMP	93
94	CUE/TALK CR	94
95	CR MIC O/L	95
96	ST MIC O/L	96

LINE INPUT

SDATA_3, CUE_ON_3, PGM1_ON_3, FADER_WIPER_3, O/L_ON_3, PGM2_ON_3, FADER_ON_3, PGM3_ON_3

P5		
1	SERIAL DATA 3	1
2	SHIELD	2
3	FADER REFERENCE HIGH	3
4	CUE ON 3	4
5	PGM1 ON 3	5
6	AUDIO GND	6
7	AUDIO GND	7
8	AUDIO GND	8
9	AUDIO GND	9
10	+48V PHANTOM	10
11	-16V AUDIO	11
12	-16V AUDIO	12
13	-16V AUDIO	13
14	-16V AUDIO	14
15	DSP GO	15
16		16
17		17
18		18
19		19
20		20
21		21
22		22
23	LOGIC GND	23
24	LOGIC GND	24
25	LOGIC GND	25
26	-5V LOGIC	26
27	-5V LOGIC	27
28	-5V LOGIC	28
29	-12V LAMP	29
30	KEEP ALIVE	30
31	CR WARNING	31
32	ST WARNING	32
33	256FS	33
34	64FS	34
35	FADER WIPER 3	35
36	O/L ON 3	36
37	PGM2 ON 3	37
38	AUDIO GND	38
39	AUDIO GND	39
40	AUDIO GND	40
41	AUDIO GND	41
42	+48V PHANTOM	42
43	+16V AUDIO	43
44	+16V AUDIO	44
45	-16V AUDIO	45
46	-16V AUDIO	46
47	"SYSTEM RESET"	47
48		48
49	1 -	49
50	2 -	50
51	3 -	51
52	4 -	52
53	5 -	53
54	6 -	54
55	LOGIC GND	55
56	LOGIC GND	56
57	LOGIC GND	57
58	-5V LOGIC	58
59	-5V LOGIC	59
60	-5V LOGIC	60
61	-12V LAMP	61
62	TIMER RESET	62
63	CR MUTE BUS	63
64	ST MUTE BUS	64
65	FS	65
66	SHIELD	66
67	FADER REFERENCE LOW	67
68	FADER ON 3	68
69	PGM3 ON 3	69
70	AUDIO GND	70
71	AUDIO GND	71
72	AUDIO GND	72
73	AUDIO GND	73
74	+48V PHANTOM	74
75	+16V AUDIO	75
76	+16V AUDIO	76
77	+16V AUDIO	77
78	+16V AUDIO	78
79	FADER START ENABLE	79
80		80
81	1 -	81
82	2 -	82
83	3 -	83
84	4 -	84
85	5 -	85
86	6 -	86
87	LOGIC GND	87
88	LOGIC GND	88
89	LOGIC GND	89
90	-5V LOGIC	90
91	-5V LOGIC	91
92	-5V LOGIC	92
93	-12V LAMP	93
94	CUE/TALK CR	94
95	CR MIC O/L	95
96	ST MIC O/L	96

LINE INPUT

SDATA_4, CUE_ON_4, PGM1_ON_4, FADER_WIPER_4, O/L_ON_4, PGM2_ON_4, FADER_ON_4, PGM3_ON_4

P6		
1	SERIAL DATA 4	1
2	SHIELD	2
3	FADER REFERENCE HIGH	3
4	CUE ON 4	4
5	PGM1 ON 4	5
6	AUDIO GND	6
7	AUDIO GND	7
8	AUDIO GND	8
9	AUDIO GND	9
10	+48V PHANTOM	10
11	-16V AUDIO	11
12	-16V AUDIO	12
13	-16V AUDIO	13
14	-16V AUDIO	14
15	DSP GO	15
16		16
17		17
18		18
19		19
20		20
21		21
22		22
23	LOGIC GND	23
24	LOGIC GND	24
25	LOGIC GND	25
26	+5V LOGIC	26
27	+5V LOGIC	27
28	+5V LOGIC	28
29	+12V LAMP	29
30	KEEP ALIVE	30
31	CR WARNING	31
32	ST WARNING	32
33	256FS	33
34	64FS	34
35	FADER WIPER 4	35
36	O/L ON 4	36
37	PGM2 ON 4	37
38	AUDIO GND	38
39	AUDIO GND	39
40	AUDIO GND	40
41	AUDIO GND	41
42	+48V PHANTOM	42
43	-16V AUDIO	43
44	-16V AUDIO	44
45	-16V AUDIO	45
46	-16V AUDIO	46
47	"SYSTEM RESET"	47
48		48
49	1 -	49
50	2 -	50
51	3 -	51
52	4 -	52
53	5 -	53
54	6 -	54
55	LOGIC GND	55
56	LOGIC GND	56
57	LOGIC GND	57
58	+5V LOGIC	58
59	+5V LOGIC	59
60	+5V LOGIC	60
61	+12V LAMP	61
62	TIMER RESET	62
63	CR MUTE BUS	63
64	ST MUTE BUS	64
65	FS	65
66	SHIELD	66
67	FADER REFERENCE LOW	67
68	FADER ON 4	68
69	PGM3 ON 4	69
70	AUDIO GND	70
71	AUDIO GND	71
72	AUDIO GND	72
73	AUDIO GND	73
74	+48V PHANTOM	74
75	+16V AUDIO	75
76	+16V AUDIO	76
77	+16V AUDIO	77
78	+16V AUDIO	78
79	FADER START ENABLE	79
80		80
81	1 -	81
82	2 -	82
83	3 -	83
84	4 -	84
85	5 -	85
86	6 -	86
87	LOGIC GND	87
88	LOGIC GND	88
89	LOGIC GND	89
90	+5V LOGIC	90
91	+5V LOGIC	91
92	+5V LOGIC	92
93	+12V LAMP	93
94	CUE/TALK CR	94
95	CR MIC O/L	95
96	ST MIC O/L	96

AUDIO_GND, FADER_REF_HIGH, AUDIO_GND, AUDIO_GND, AUDIO_GND, AUDIO_GND, +48V_PHANTOM, -16V_AUDIO, -16V_AUDIO, -16V_AUDIO, -16V_AUDIO, DSP_GO, AUDIO_GND, AUDIO_GND, AUDIO_GND, AUDIO_GND, AUDIO_GND, AUDIO_GND, AUDIO_GND, AUDIO_GND, -5V_LOGIC, -5V_LOGIC, -5V_LOGIC, KEEP_ALIVE, CR_WARNING, ST_WARNING, 256FS, 64FS, AUDIO_GND, AUDIO_GND, AUDIO_GND, AUDIO_GND, +48V_PHANTOM, -16V_AUDIO, -16V_AUDIO, -16V_AUDIO, -16V_AUDIO, SYSTEM_RESET, OPEN, 1_-, 2_-, 3_-, 4_-, 5_-, 6_-, AUDIO_GND, AUDIO_GND, AUDIO_GND, -5V_LOGIC, -5V_LOGIC, -5V_LOGIC, -12V_LAMP, TIMER_RESET, CR_MUTE_BUS, ST_MUTE_BUS, FS, AUDIO_GND, FADER_REF_LOW, AUDIO_GND, AUDIO_GND, AUDIO_GND, AUDIO_GND, +48V_PHANTOM, -16V_AUDIO, -16V_AUDIO, -16V_AUDIO, -16V_AUDIO, FADER_START_ENABLE, 1_-, 2_-, 3_-, 4_-, 5_-, 6_-, AUDIO_GND, AUDIO_GND, -5V_LOGIC, -5V_LOGIC, -12V_LAMP, CUE/TALK_CR, CR_MIC_O/L, ST_MIC_O/L

APPROVALS	DATE
J. DOMBROWSKI	11/2/98

USED ON: DWave

PACIFIC RESEARCH & ENGINEERING CORPORATION

SCHEMATIC

MOTHER BOARD 1, LEFT, DWAVE

SIZE	DRAWING NUMBER	REV
D	92-1007	B
	3-10-1999_14:27	SHEET 1 OF 2

LINE INPUT

	SERIAL DATA 5	P7	1
AUDIO_GND	SHIELD	P7	2
FADER_REF_HIGH	FADER REFERENCE HIGH	P7	3
	CUE ON 5	P7	4
	PGM1 ON 5	P7	5
AUDIO_GND	AUDIO GND	P7	6
AUDIO_GND	AUDIO GND	P7	7
AUDIO_GND	AUDIO GND	P7	8
AUDIO_GND	AUDIO GND	P7	9
+48V_PHANTOM	+48V PHANTOM	P7	10
-16V_AUDIO	-16V AUDIO	P7	11
-16V_AUDIO	-16V AUDIO	P7	12
-16V_AUDIO	-16V AUDIO	P7	13
-16V_AUDIO	-16V AUDIO	P7	14
DSP_GO	DSP GO	P7	15
		P7	16
AUDIO_GND		P7	17
AUDIO_GND		P7	18
AUDIO_GND		P7	19
AUDIO_GND		P7	20
AUDIO_GND		P7	21
AUDIO_GND		P7	22
AUDIO_GND	LOGIC GND	P7	23
AUDIO_GND	LOGIC GND	P7	24
AUDIO_GND	LOGIC GND	P7	25
-5V_LOGIC	-5V LOGIC	P7	26
-5V_LOGIC	-5V LOGIC	P7	27
-5V_LOGIC	-5V LOGIC	P7	28
-12V_LAMP	-12V LAMP	P7	29
KEEP_ALIVE	KEEP ALIVE	P7	30
CR_WARNING	CR WARNING	P7	31
ST_WARNING	ST WARNING	P7	32
256FS	256FS	P7	33
64FS	64FS	P7	34
	FADER WIPER 5	P7	35
	O/L ON 5	P7	36
	PGM2 ON 5	P7	37
AUDIO_GND	AUDIO GND	P7	38
AUDIO_GND	AUDIO GND	P7	39
AUDIO_GND	AUDIO GND	P7	40
AUDIO_GND	AUDIO GND	P7	41
+48V_PHANTOM	+48V PHANTOM	P7	42
+16V_AUDIO	+16V AUDIO	P7	43
+16V_AUDIO	+16V AUDIO	P7	44
+16V_AUDIO	+16V AUDIO	P7	45
+16V_AUDIO	+16V AUDIO	P7	46
SYSTEM_RESET	"SYSTEM RESET"	P7	47
OPEN		P7	48
1_-	1 -	P7	49
2_-	2 -	P7	50
3_-	3 -	P7	51
4_-	4 -	P7	52
5_-	5 -	P7	53
6_-	6 -	P7	54
AUDIO_GND	LOGIC GND	P7	55
AUDIO_GND	LOGIC GND	P7	56
AUDIO_GND	LOGIC GND	P7	57
-5V_LOGIC	-5V LOGIC	P7	58
-5V_LOGIC	-5V LOGIC	P7	59
-5V_LOGIC	-5V LOGIC	P7	60
-12V_LAMP	-12V LAMP	P7	61
TIMER_RESET	"TIMER RESET"	P7	62
CR_MUTE_BUS	CR MUTE BUS	P7	63
ST_MUTE_BUS	ST MUTE BUS	P7	64
FS	FS	P7	65
AUDIO_GND	SHIELD	P7	66
FADER_REF_LOW	FADER REFERENCE LOW	P7	67
	FADER ON 5	P7	68
	PGM3 ON 5	P7	69
AUDIO_GND	AUDIO GND	P7	70
AUDIO_GND	AUDIO GND	P7	71
AUDIO_GND	AUDIO GND	P7	72
AUDIO_GND	AUDIO GND	P7	73
+48V_PHANTOM	+48V PHANTOM	P7	74
-16V_AUDIO	-16V AUDIO	P7	75
-16V_AUDIO	-16V AUDIO	P7	76
-16V_AUDIO	-16V AUDIO	P7	77
-16V_AUDIO	-16V AUDIO	P7	78
FADER_START_ENABLE	FADER START ENABLE	P7	79
		P7	80
1_-	1 -	P7	81
2_-	2 -	P7	82
3_-	3 -	P7	83
4_-	4 -	P7	84
5_-	5 -	P7	85
6_-	6 -	P7	86
AUDIO_GND	LOGIC GND	P7	87
AUDIO_GND	LOGIC GND	P7	88
AUDIO_GND	LOGIC GND	P7	89
-5V_LOGIC	-5V LOGIC	P7	90
-5V_LOGIC	-5V LOGIC	P7	91
-5V_LOGIC	-5V LOGIC	P7	92
-12V_LAMP	-12V LAMP	P7	93
CUE/TALK_CR	CUE/TALK CR	P7	94
CR_MIC_O/L	CR MIC O/L	P7	95
ST_MIC_O/L	ST MIC O/L	P7	96

LINE INPUT

	SERIAL DATA 6	P8	1
	SHIELD	P8	2
	FADER REFERENCE HIGH	P8	3
	CUE ON 6	P8	4
	PGM1 ON 6	P8	5
AUDIO_GND	AUDIO GND	P8	6
AUDIO_GND	AUDIO GND	P8	7
AUDIO_GND	AUDIO GND	P8	8
AUDIO_GND	AUDIO GND	P8	9
+48V_PHANTOM	+48V PHANTOM	P8	10
-16V_AUDIO	-16V AUDIO	P8	11
-16V_AUDIO	-16V AUDIO	P8	12
-16V_AUDIO	-16V AUDIO	P8	13
-16V_AUDIO	-16V AUDIO	P8	14
DSP_GO	DSP GO	P8	15
		P8	16
		P8	17
		P8	18
		P8	19
		P8	20
		P8	21
		P8	22
	LOGIC GND	P8	23
	LOGIC GND	P8	24
	LOGIC GND	P8	25
	-5V LOGIC	P8	26
	-5V LOGIC	P8	27
	-5V LOGIC	P8	28
	-12V LAMP	P8	29
	KEEP ALIVE	P8	30
	CR WARNING	P8	31
	ST WARNING	P8	32
	256FS	P8	33
	64FS	P8	34
	FADER WIPER 6	P8	35
	O/L ON 6	P8	36
	PGM2 ON 6	P8	37
	AUDIO GND	P8	38
	AUDIO GND	P8	39
	AUDIO GND	P8	40
	AUDIO GND	P8	41
	+48V PHANTOM	P8	42
	+16V AUDIO	P8	43
	+16V AUDIO	P8	44
	+16V AUDIO	P8	45
	+16V AUDIO	P8	46
	"SYSTEM RESET"	P8	47
		P8	48
	1 -	P8	49
	2 -	P8	50
	3 -	P8	51
	4 -	P8	52
	5 -	P8	53
	6 -	P8	54
	LOGIC GND	P8	55
	LOGIC GND	P8	56
	LOGIC GND	P8	57
	-5V LOGIC	P8	58
	-5V LOGIC	P8	59
	-5V LOGIC	P8	60
	-12V LAMP	P8	61
	"TIMER RESET"	P8	62
	CR MUTE BUS	P8	63
	ST MUTE BUS	P8	64
	FS	P8	65
	SHIELD	P8	66
	FADER REFERENCE LOW	P8	67
	FADER ON 6	P8	68
	PGM3 ON 6	P8	69
	AUDIO GND	P8	70
	AUDIO GND	P8	71
	AUDIO GND	P8	72
	AUDIO GND	P8	73
	+48V PHANTOM	P8	74
	-16V AUDIO	P8	75
	-16V AUDIO	P8	76
	-16V AUDIO	P8	77
	-16V AUDIO	P8	78
	FADER START ENABLE	P8	79
		P8	80
	1 -	P8	81
	2 -	P8	82
	3 -	P8	83
	4 -	P8	84
	5 -	P8	85
	6 -	P8	86
	LOGIC GND	P8	87
	LOGIC GND	P8	88
	LOGIC GND	P8	89
	-5V LOGIC	P8	90
	-5V LOGIC	P8	91
	-5V LOGIC	P8	92
	-12V LAMP	P8	93
	CUE/TALK CR	P8	94
	CR MIC O/L	P8	95
	ST MIC O/L	P8	96

LINE INPUT

	SERIAL DATA 7	P9	1
	SHIELD	P9	2
	FADER REFERENCE HIGH	P9	3
	CUE ON 7	P9	4
	PGM1 ON 7	P9	5
AUDIO GND	AUDIO GND	P9	6
AUDIO GND	AUDIO GND	P9	7
AUDIO GND	AUDIO GND	P9	8
AUDIO GND	AUDIO GND	P9	9
+48V PHANTOM	+48V PHANTOM	P9	10
-16V AUDIO	-16V AUDIO	P9	11
-16V AUDIO	-16V AUDIO	P9	12
-16V AUDIO	-16V AUDIO	P9	13
-16V AUDIO	-16V AUDIO	P9	14
DSP GO	DSP GO	P9	15
		P9	16
		P9	17
		P9	18
		P9	19
		P9	20
		P9	21
		P9	22
LOGIC GND	LOGIC GND	P9	23
LOGIC GND	LOGIC GND	P9	24
LOGIC GND	LOGIC GND	P9	25
+5V LOGIC	+5V LOGIC	P9	26
+5V LOGIC	+5V LOGIC	P9	27
+5V LOGIC	+5V LOGIC	P9	28
+12V LAMP	+12V LAMP	P9	29
KEEP ALIVE	KEEP ALIVE	P9	30
CR WARNING	CR WARNING	P9	31
ST WARNING	ST WARNING	P9	32
256FS	256FS	P9	33
64FS	64FS	P9	34
FADER WIPER 7	FADER WIPER 7	P9	35
O/L ON 7	O/L ON 7	P9	36
PGM2 ON 7	PGM2 ON 7	P9	37
AUDIO GND	AUDIO GND	P9	38
AUDIO GND	AUDIO GND	P9	39
AUDIO GND	AUDIO GND	P9	40
AUDIO GND	AUDIO GND	P9	41
+48V PHANTOM	+48V PHANTOM	P9	42
-16V AUDIO	-16V AUDIO	P9	43
-16V AUDIO	-16V AUDIO	P9	44
-16V AUDIO	-16V AUDIO	P9	45
-16V AUDIO	-16V AUDIO	P9	46
"SYSTEM RESET"	"SYSTEM RESET"	P9	47
		P9	48
1 -	1 -	P9	49
2 -	2 -	P9	50
3 -	3 -	P9	51
4 -	4 -	P9	52
5 -	5 -	P9	53
6 -	6 -	P9	54
LOGIC GND	LOGIC GND	P9	55
LOGIC GND	LOGIC GND	P9	56
LOGIC GND	LOGIC GND	P9	57
-5V LOGIC	-5V LOGIC	P9	58
-5V LOGIC	-5V LOGIC	P9	59
-5V LOGIC	-5V LOGIC	P9	60
-12V LAMP	-12V LAMP	P9	61
"TIMER RESET"	"TIMER RESET"	P9	62
CR MUTE BUS	CR MUTE BUS	P9	63
ST MUTE BUS	ST MUTE BUS	P9	64
FS	FS	P9	65
SHIELD	SHIELD	P9	66
FADER REFERENCE LOW	FADER REFERENCE LOW	P9	67
FADER ON 7	FADER ON 7	P9	68
PGM3 ON 7	PGM3 ON 7	P9	69
AUDIO GND	AUDIO GND	P9	70
AUDIO GND	AUDIO GND	P9	71
AUDIO GND	AUDIO GND	P9	72
AUDIO GND	AUDIO GND	P9	73
+48V PHANTOM	+48V PHANTOM	P9	74
-16V AUDIO	-16V AUDIO	P9	75
-16V AUDIO	-16V AUDIO	P9	76
-16V AUDIO	-16V AUDIO	P9	77
-16V AUDIO	-16V AUDIO	P9	78
FADER START ENABLE	FADER START ENABLE	P9	79
		P9	80
1 -	1 -	P9	81
2 -	2 -	P9	82
3 -	3 -	P9	83
4 -	4 -	P9	84
5 -	5 -	P9	85
6 -	6 -	P9	86
LOGIC GND	LOGIC GND	P9	87
LOGIC GND	LOGIC GND	P9	88
LOGIC GND	LOGIC GND	P9	89
+5V LOGIC	+5V LOGIC	P9	90
+5V LOGIC	+5V LOGIC	P9	91
+5V LOGIC	+5V LOGIC	P9	92
+12V LAMP	+12V LAMP	P9	93
CUE/TALK CR	CUE/TALK CR	P9	94
CR MIC O/L	CR MIC O/L	P9	95
ST MIC O/L	ST MIC O/L	P9	96

LINE INPUT

	SERIAL DATA 8	P10	1
	SHIELD	P10	2
	FADER REFERENCE HIGH	P10	3
	CUE ON 8	P10	4
	PGM1 ON 8	P10	5
AUDIO GND	AUDIO GND	P10	6
AUDIO GND	AUDIO GND	P10	7
AUDIO GND	AUDIO GND	P10	8
AUDIO GND	AUDIO GND	P10	9
+48V PHANTOM	+48V PHANTOM	P10	10
-16V AUDIO	-16V AUDIO	P10	11
-16V AUDIO	-16V AUDIO	P10	12
-16V AUDIO	-16V AUDIO	P10	13
-16V AUDIO	-16V AUDIO	P10	14
DSP GO	DSP GO	P10	15
		P10	16
		P10	17
		P10	18
		P10	19
		P10	20
		P10	21
		P10	22
LOGIC GND	LOGIC GND	P10	23
LOGIC GND	LOGIC GND	P10	24
LOGIC GND	LOGIC GND	P10	25
-5V LOGIC	-5V LOGIC	P10	26
-5V LOGIC	-5V LOGIC	P10	27
-5V LOGIC	-5V LOGIC	P10	28
-12V LAMP	-12V LAMP	P10	29
KEEP ALIVE	KEEP ALIVE	P10	30
CR WARNING	CR WARNING	P10	31
ST WARNING	ST WARNING	P10	32
256FS	256FS	P10	33
64FS	64FS	P10	34
FADER WIPER 8	FADER WIPER 8	P10	35
O/L ON 8	O/L ON 8	P10	36
PGM2 ON 8	PGM2 ON 8	P10	37
AUDIO GND	AUDIO GND	P10	38
AUDIO GND	AUDIO GND	P10	39
AUDIO GND	AUDIO GND	P10	40
AUDIO GND	AUDIO GND	P10	41
+48V PHANTOM	+48V PHANTOM	P10	42
-16V AUDIO	-16V AUDIO	P10	43
-16V AUDIO	-16V AUDIO	P10	44
-16V AUDIO	-16V AUDIO	P10	45
-16V AUDIO	-16V AUDIO	P10	46
"SYSTEM RESET"	"SYSTEM RESET"	P10	47
		P10	48
1 -	1 -	P10	49
2 -	2 -	P10	50
3 -	3 -	P10	51
4 -	4 -	P10	52
5 -	5 -	P10	53
6 -	6 -	P10	54
LOGIC GND	LOGIC GND	P10	55
LOGIC GND	LOGIC GND	P10	56
LOGIC GND	LOGIC GND	P10	57
+5V LOGIC	+5V LOGIC	P10	58
-5V LOGIC	-5V LOGIC	P10	59
-5V LOGIC	-5V LOGIC	P10	60
-12V LAMP	-12V LAMP	P10	61
"TIMER RESET"	"TIMER RESET"	P10	62
CR MUTE BUS	CR MUTE BUS	P10	63
ST MUTE BUS	ST MUTE BUS	P10	64
FS	FS	P10	65
SHIELD	SHIELD	P10	66
FADER REFERENCE LOW	FADER REFERENCE LOW	P10	67
FADER ON 8	FADER ON 8	P10	68
PGM3 ON 8	PGM3 ON 8	P10	69
AUDIO GND	AUDIO GND	P10	70
AUDIO GND	AUDIO GND	P10	71
AUDIO GND	AUDIO GND	P10	72
AUDIO GND	AUDIO GND	P10	73
+48V PHANTOM	+48V PHANTOM	P10	74
-16V AUDIO	-16V AUDIO	P10	75
-16V AUDIO	-16V AUDIO	P10	76
-16V AUDIO	-16V AUDIO	P10	77
-16V AUDIO	-16V AUDIO	P10	78
FADER START ENABLE	FADER START ENABLE	P10	79
		P10	80
1 -	1 -	P10	81
2 -	2 -	P10	82
3 -	3 -	P10	83
4 -	4 -	P10	84
5 -	5 -	P10	85
6 -	6 -	P10	86
LOGIC GND	LOGIC GND	P10	87
LOGIC GND	LOGIC GND	P10	88
LOGIC GND	LOGIC GND	P10	89
+5V LOGIC	+5V LOGIC	P10	90
+5V LOGIC	+5V LOGIC	P10	91
+5V LOGIC	+5V LOGIC	P10	92
+12V LAMP	+12V LAMP	P10	93
CUE/TALK CR	CUE/TALK CR	P10	94
CR MIC O/L	CR MIC O/L	P10	95
ST MIC O/L	ST MIC O/L	P10	96

MOTHER BOARD INTERCONNECT

		P11	1
		P11	2
		P11	3
		P11	4
		P11	5
AUDIO GND		P11	6
AUDIO GND		P11	7
AUDIO GND		P11	8
AUDIO GND		P11	9
+48V PHANTOM		P11	10
-16V AUDIO		P11	11
-16V AUDIO		P11	12
-16V AUDIO		P11	13
-16V AUDIO		P11	14
		P11	15
		P11	16
		P11	17
		P11	18
		P11	19
		P11	20
		P11	21
		P11	22
LOGIC GND		P11	23
LOGIC GND		P11	24
LOGIC GND		P11	25
-5V LOGIC		P11	26
-5V LOGIC		P11	27
-5V LOGIC		P11	28
-12V LAMP		P11	29
KEEP ALIVE		P11	30
CR WARNING		P11	31
ST WARNING		P11	32
		P11	33
		P11	34
		P11	35
		P11	36
		P11	37
AUDIO GND		P11	38
AUDIO GND		P11	39
AUDIO GND		P11	40
AUDIO GND		P11	41
+48V PHANTOM		P11	42
-16V AUDIO		P11	43
-16V AUDIO		P11	44
-16V AUDIO		P11	45
-16V AUDIO		P11	46
"SYSTEM RESET"		P11	47
		P11	48
		P11	49
		P11	50
		P11	51
		P11	52
		P11	53
		P11	54
LOGIC GND		P11	55
LOGIC GND		P11	56
LOGIC GND		P11	57
-5V LOGIC		P11	58
-5V LOGIC		P11	59
+5V LOGIC		P11	60
-12V LAMP		P11	61
TIMER RESET		P11	62
CR MUTE BUS		P11	63
ST MUTE BUS		P11	64
		P11	65
		P11	66
		P11	67
		P11	68
		P11	69
AUDIO GND		P11	70
AUDIO GND		P11	71
AUDIO GND		P11	72
AUDIO GND		P11	73
+48V PHANTOM		P11	74
-16V AUDIO		P11	75
-16V AUDIO		P11	76
-16V AUDIO		P11	77
-16V AUDIO		P11	78
	FADER START ENABLE	P11	79
		P11	80
		P11	81
		P11	82
		P11	83
		P11	84
		P11	85
		P11	86
LOGIC GND		P11	87
LOGIC GND		P11	88
LOGIC GND		P11	89
+5V LOGIC		P11	90
+5V LOGIC		P11	91
-5V LOGIC		P11	92
-12V LAMP		P11	93
CUE/TALK CR		P11	94
CR MIC O/L		P11	95
ST MIC O/L		P11	96

DSP INTERCONNECT

OUT

		J1	1
		J1	2
		J1	3
256FS LINK OU	256FS_LINK_OUT	J1	4
FS LINK OUT	FS_LINK_OUT	J1	5
SERIAL LINK DA	SLDATA_OUT	J1	6

D

SDATA_1	SERIAL DATA 1	P12	96
CUE_ON_1	CUE ON 1	P12	95
PGM1_ON_1	PGM1 ON 1	P12	94
SDATA_2	SERIAL DATA 2	P12	93
CUE_ON_2	CUE ON 2	P12	92
PGM1_ON_2	PGM1 ON 2	P12	91
SDATA_3	SERIAL DATA 3	P12	90
CUE_ON_3	CUE ON 3	P12	89
PGM1_ON_3	PGM1 ON 3	P12	88
SDATA_4	SERIAL DATA 4	P12	87
CUE_ON_4	CUE ON 4	P12	86
PGM1_ON_4	PGM1 ON 4	P12	85
SDATA_5	SERIAL DATA 5	P12	84
CUE_ON_5	CUE ON 5	P12	83
PGM1_ON_5	PGM1 ON 5	P12	82
SDATA_6	SERIAL DATA 6	P12	81
CUE_ON_6	CUE ON 6	P12	80
PGM1_ON_6	PGM1 ON 6	P12	79
SDATA_7	SERIAL DATA 7	P12	78
CUE_ON_7	CUE ON 7	P12	77
PGM1_ON_7	PGM1 ON 7	P12	76
SDATA_8	SERIAL DATA 8	P12	75
CUE_ON_8	CUE ON 8	P12	74
PGM1_ON_8	PGM1 ON 8	P12	73
FADER_REF_LOW	FADER REFERENCE LOW	P12	72
256FS_LINK_OUT	256FS LINK OUT	P12	71
FS_LINK_OUT	FS LINK OUT	P12	70
FS	FS	P12	69
AUDIO_GND	LOGIC GND	P12	68
AUDIO_GND	LOGIC GND	P12	67
-5V_LOGIC	-5V LOGIC	P12	66
-5V_LOGIC	-5V LOGIC	P12	65
FADER_WIPER_1	FADER WIPER 1	P12	64
O/L_ON_1	O/L ON 1	P12	63
PGM2_ON_1	PGM2 ON 1	P12	62
FADER_WIPER_2	FADER WIPER 2	P12	61
O/L_ON_2	O/L ON 2	P12	60
PGM2_ON_2	PGM2 ON 2	P12	59
FADER_WIPER_3	FADER WIPER 3	P12	58
O/L_ON_3	O/L ON 3	P12	57
PGM2_ON_3	PGM2 ON 3	P12	56
FADER_WIPER_4	FADER WIPER 4	P12	55
O/L_ON_4	O/L ON 4	P12	54
PGM2_ON_4	PGM2 ON 4	P12	53
FADER_WIPER_5	FADER WIPER 5	P12	52
O/L_ON_5	O/L ON 5	P12	51
PGM2_ON_5	PGM2 ON 5	P12	50
FADER_WIPER_6	FADER WIPER 6	P12	49
O/L_ON_6	O/L ON 6	P12	48
PGM2_ON_6	PGM2 ON 6	P12	47
FADER_WIPER_7	FADER WIPER 7	P12	46
O/L_ON_7	O/L ON 7	P12	45
PGM2_ON_7	PGM2 ON 7	P12	44
FADER_WIPER_8	FADER WIPER 8	P12	43
O/L_ON_8	O/L ON 8	P12	42
PGM2_ON_8	PGM2 ON 8	P12	41
DSP_GO	DSP GO	P12	40
SLDATA_OUT	SERIAL LINK DATA OUT	P12	39
	SERIAL LINK DATA IN	P12	38
64FS	64FS	P12	37
AUDIO_GND	LOGIC GND	P12	36
AUDIO_GND	LOGIC GND	P12	35
-5V_LOGIC	-5V LOGIC	P12	34
-5V_LOGIC	-5V LOGIC	P12	33
SYSTEM_RESET	"SYSTEM RESET"	P12	32
FADER_ON_1	FADER ON 1	P12	31
PGM3_ON_1	PGM3 ON 1	P12	30
		P12	29
FADER_ON_2	FADER ON 2	P12	28
PGM3_ON_2	PGM3 ON 2	P12	27
		P12	26
FADER_ON_3	FADER ON 3	P12	25
PGM3_ON_3	PGM3 ON 3	P12	24
		P12	23
FADER_ON_4	FADER ON 4	P12	22
PGM3_ON_4	PGM3 ON 4	P12	21
		P12	20
FADER_ON_5	FADER ON 5	P12	19
PGM3_ON_5	PGM3 ON 5	P12	18
		P12	17
FADER_ON_6	FADER ON 6	P12	16
PGM3_ON_6	PGM3 ON 6	P12	15
		P12	14
FADER_ON_7	FADER ON 7	P12	13
PGM3_ON_7	PGM3 ON 7	P12	12
		P12	11
FADER_ON_8	FADER ON 8	P12	10
PGM3_ON_8	PGM3 ON 8	P12	9
FADER_REF_HIGH	FADER REFERENCE HIGH	P12	8
	FS LINK IN	P12	7
	256FS LINK IN	P12	6
256FS	256FS	P12	5
AUDIO_GND	LOGIC GND	P12	4
AUDIO_GND	LOGIC GND	P12	3
-5V_LOGIC	-5V LOGIC	P12	2
-5V_LOGIC	-5V LOGIC	P12	1

PACIFIC RESEARCH & ENGINEERING CORPORATION

SIZE	DRAWING NUMBER	REV
D	92-1007	B
2-22-1999_13:23	SHEET 2 OF 2	

REVISIONS				
REV	ECO #	DESCRIPTION	DATE	APPROVAL
A	4353	Connect Audio and Logic grounds	1/21/99	J.Dombrowski
C	4361	Add termination components	3/10/99	L. Stanton

MOTHER BOARD INTERCONNECT

GND
C3 47pF
C2 47pF
C1 47pF
R3 100
R2 100
R1 100

| | | | |

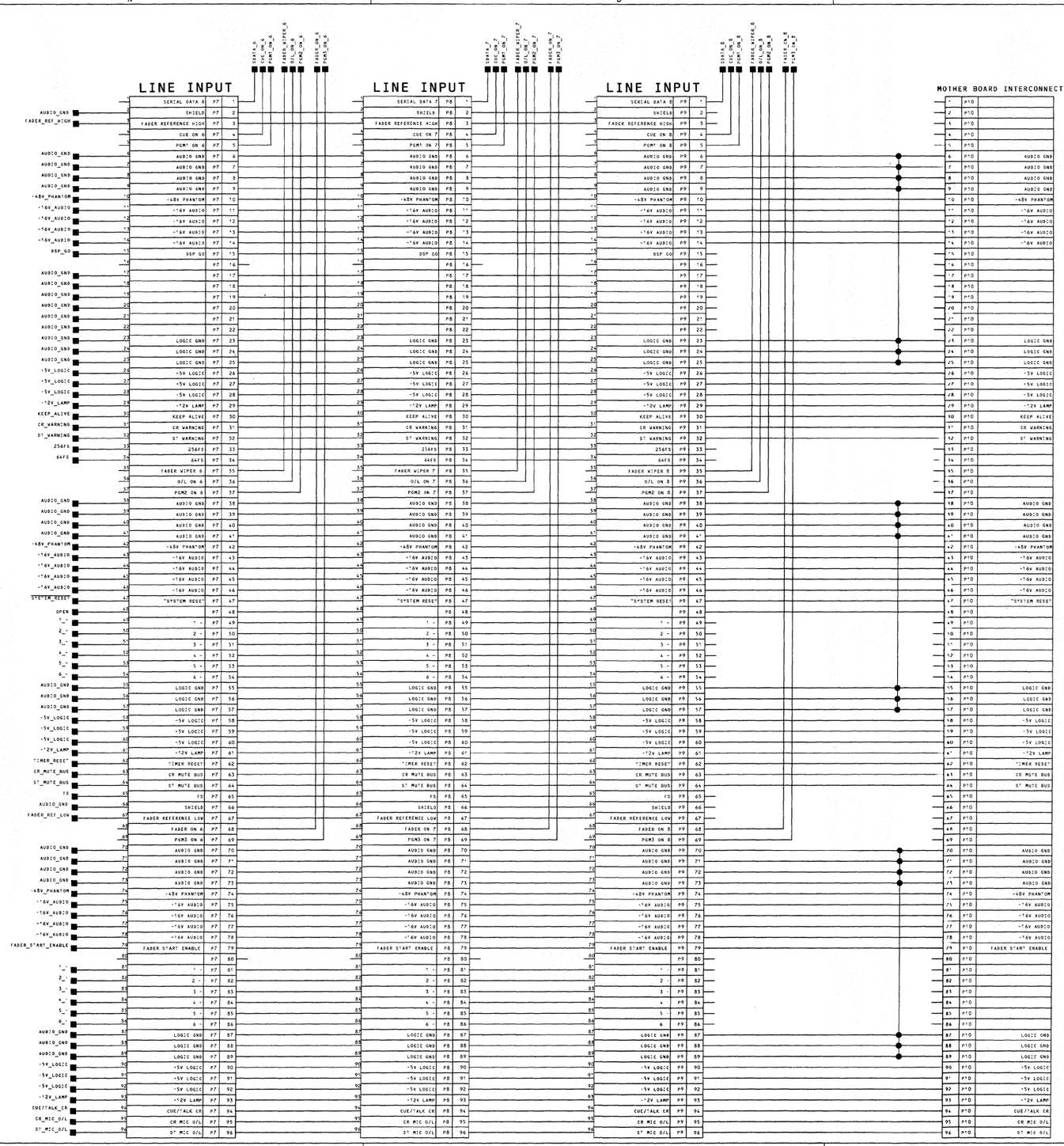

PACIFIC RESEARCH & ENGINEERING CORPORATION

SIZE	DRAWING NUMBER	REV
D	92-1008	C
2-22-1999_14:01	SHEET 2 OF 2	

REVISIONS				
REV	ECO #	DESCRIPTION	DATE	APPROVAL
A	4353	Connect Audio and Logic grounds	1/21/99	J. Dombrowski
C	4361	Add termination components	3/10/99	L. Stanton

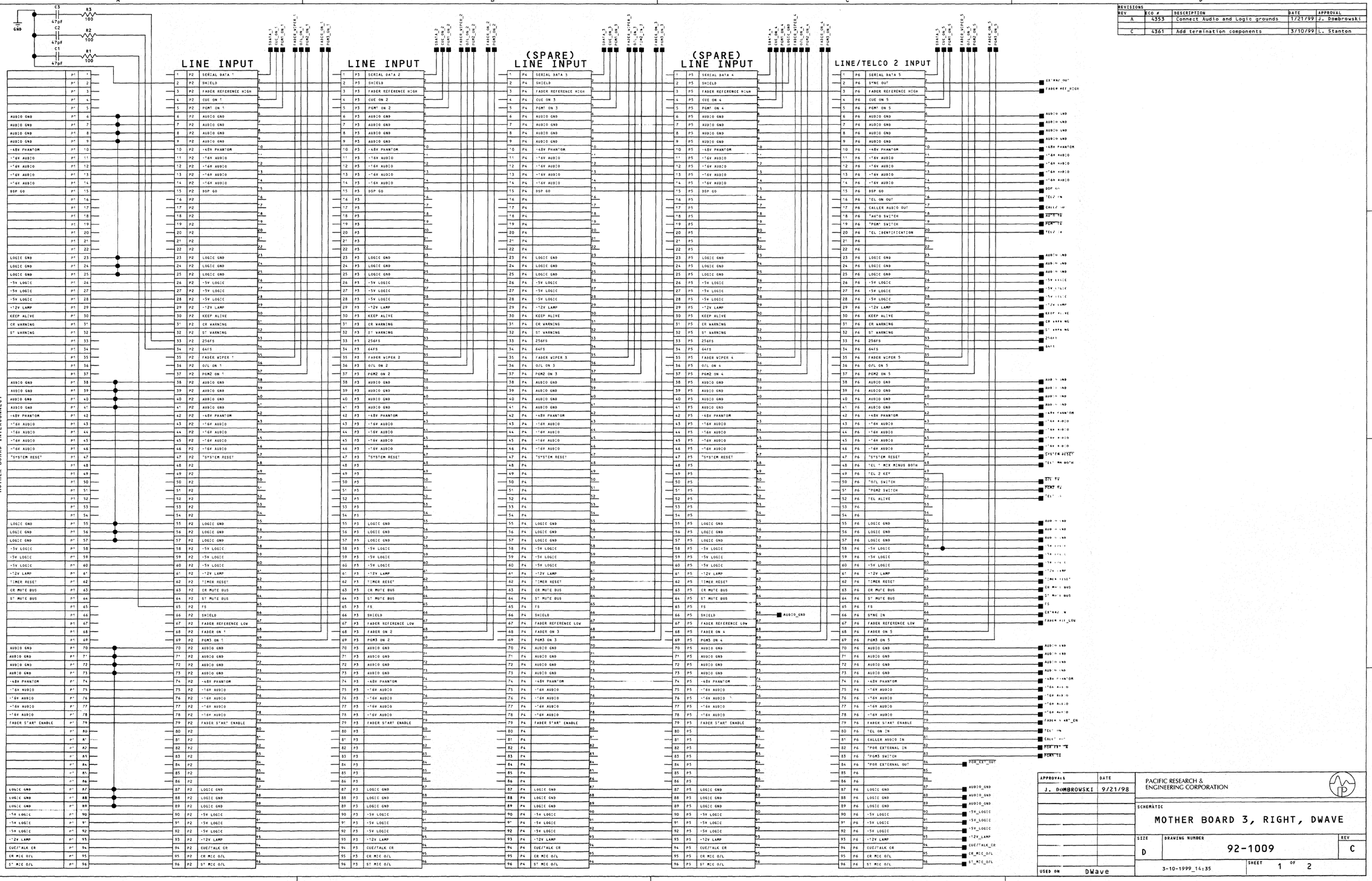

APPROVALS	DATE
J. DOMBROWSKI	9/21/98
USED ON	DWave

PACIFIC RESEARCH & ENGINEERING CORPORATION

SCHEMATIC

MOTHER BOARD 3, RIGHT, DWAVE

SIZE	DRAWING NUMBER	REV
D	92-1009	C
3-10-1999_14:35	SHEET 1 OF 2	

LINE/TELCO 1 INPUT

	SERIAL DATA 6	P7	1
EXTRA2_IN	SYNC OUT	P7	2
FADER_REF_HIGH	FADER REFERENCE HIGH	P7	3
	CUE ON 6	P7	4
	PGM1 ON 6	P7	5
AUDIO_GND	AUDIO GND	P7	6
AUDIO_GND	AUDIO GND	P7	7
AUDIO_GND	AUDIO GND	P7	8
AUDIO_GND	AUDIO GND	P7	9
+48V_PHANTOM	+48V PHANTOM	P7	10
+16V_AUDIO	+16V AUDIO	P7	11
+16V_AUDIO	+16V AUDIO	P7	12
-16V_AUDIO	-16V AUDIO	P7	13
-16V_AUDIO	-16V AUDIO	P7	14
DSP_GO	DSP GO	P7	15
TEL1_ON	TEL ON OUT	P7	16
CALL1_OUT	CALLER AUDIO OUT	P7	17
AUTO_SW	*AUTO SWITCH	P7	18
PGM1_SW	*PGM1 SWITCH	P7	19
TEL1_ID	TEL IDENTIFICATION	P7	20
	SHIELD	P7	21
	SHIELD	P7	22
AUDIO_GND	LOGIC GND	P7	23
AUDIO_GND	LOGIC GND	P7	24
AUDIO_GND	LOGIC GND	P7	25
+5V_LOGIC	+5V LOGIC	P7	26
+5V_LOGIC	+5V LOGIC	P7	27
+5V_LOGIC	+5V LOGIC	P7	28
+12V_LAMP	+12V LAMP	P7	29
KEEP_ALIVE	KEEP ALIVE	P7	30
CR_WARNING	CR WARNING	P7	31
ST_WARNING	ST WARNING	P7	32
256FS	256FS	P7	33
64FS	64FS	P7	34
	FADER WIPER 6	P7	35
	O/L ON 6	P7	36
	PGM2 ON 6	P7	37
AUDIO_GND	AUDIO GND	P7	38
AUDIO_GND	AUDIO GND	P7	39
AUDIO_GND	AUDIO GND	P7	40
AUDIO_GND	AUDIO GND	P7	41
+48V_PHANTOM	+48V PHANTOM	P7	42
+16V_AUDIO	+16V AUDIO	P7	43
+16V_AUDIO	+16V AUDIO	P7	44
-16V_AUDIO	-16V AUDIO	P7	45
-16V_AUDIO	-16V AUDIO	P7	46
SYSTEM_RESET	*SYSTEM RESET	P7	47
TEL1_MM_BOTH	TEL * MIX MINUS BOTH	P7	48
	TEL * KEY	P7	49
O/L_SW	*O/L SWITCH	P7	50
PGM2_SW	*PGM2 SWITCH	P7	51
TEL2_ID	TEL ALIVE	P7	52
	SEND/CALLER -	P7	53
	CALL AUDIO -	P7	54
AUDIO_GND	LOGIC GND	P7	55
AUDIO_GND	LOGIC GND	P7	56
AUDIO_GND	LOGIC GND	P7	57
+5V_LOGIC	+5V LOGIC	P7	58
+5V_LOGIC	+5V LOGIC	P7	59
+5V_LOGIC	+5V LOGIC	P7	60
+12V_LAMP	+12V LAMP	P7	61
TIMER_RESET	TIMER RESET	P7	62
CR_MUTE_BUS	CR MUTE BUS	P7	63
ST_MUTE_BUS	ST MUTE BUS	P7	64
FS	FS	P7	65
EXTRA2_OUT	SYNC IN	P7	66
FADER_REF_LOW	FADER REFERENCE LOW	P7	67
	FADER ON 6	P7	68
	PGM3 ON 6	P7	69
AUDIO_GND	AUDIO GND	P7	70
AUDIO_GND	AUDIO GND	P7	71
AUDIO_GND	AUDIO GND	P7	72
AUDIO_GND	AUDIO GND	P7	73
+48V_PHANTOM	+48V PHANTOM	P7	74
+16V_AUDIO	+16V AUDIO	P7	75
+16V_AUDIO	+16V AUDIO	P7	76
-16V_AUDIO	-16V AUDIO	P7	77
-16V_AUDIO	-16V AUDIO	P7	78
FADER_START_EN	FADER START ENABLE	P7	79
TEL2_ON	TEL ON IN	P7	80
CALL2_OUT	CALLER AUDIO IN	P7	81
FOR_EXT_OUT	*FOR EXTERNAL IN	P7	82
PGM3_SW	*PGM3 SWITCH	P7	83
FOR_EXT_IN	*FOR EXTERNAL OUT	P7	84
	SEND/CALLER +	P7	85
	CALL AUDIO +	P7	86
AUDIO_GND	LOGIC GND	P7	87
AUDIO_GND	LOGIC GND	P7	88
AUDIO_GND	LOGIC GND	P7	89
+5V_LOGIC	+5V LOGIC	P7	90
+5V_LOGIC	+5V LOGIC	P7	91
+5V_LOGIC	+5V LOGIC	P7	92
+12V_LAMP	+12V LAMP	P7	93
CUE/TALK_CR	CUE/TALK CR	P7	94
CR_MIC_O/L	CR MIC O/L	P7	95
ST_MIC_O/L	ST MIC O/L	P7	96

MONITOR

		P8	1
	SHIELD	P8	2
	FADER REFERENCE HIGH	P8	3
		P8	4
		P8	5
	AUDIO GND	P8	6
	AUDIO GND	P8	7
	AUDIO GND	P8	8
	AUDIO GND	P8	9
	+48V PHANTOM	P8	10
	+16V AUDIO	P8	11
	+16V AUDIO	P8	12
	-16V AUDIO	P8	13
	-16V AUDIO	P8	14
	DSP GO	P8	15
		P8	16
	SHIELD	P8	17
	SHIELD	P8	18
	SHIELD	P8	19
	SHIELD	P8	20
	SHIELD	P8	21
	SHIELD	P8	22
	LOGIC GND	P8	23
	LOGIC GND	P8	24
	LOGIC GND	P8	25
	+5V LOGIC	P8	26
	+5V LOGIC	P8	27
	+5V LOGIC	P8	28
	+12V LAMP	P8	29
	KEEP ALIVE	P8	30
	CR WARNING	P8	31
	ST WARNING	P8	32
	256FS	P8	33
	64FS	P8	34
		P8	35
		P8	36
		P8	37
	AUDIO GND	P8	38
	AUDIO GND	P8	39
	AUDIO GND	P8	40
	AUDIO GND	P8	41
	+48V PHANTOM	P8	42
	+16V AUDIO	P8	43
	+16V AUDIO	P8	44
	-16V AUDIO	P8	45
	-16V AUDIO	P8	46
	*SYSTEM RESET	P8	47
	TEL * MIX MINUS BOTH	P8	48
	PGM2 OUT L -	P8	49
	PGM3 OUT L -	P8	50
	PGM2 OUT R -	P8	51
	PGM3 OUT R -	P8	52
	SEND/CALLER -	P8	53
	CALL AUDIO -	P8	54
	LOGIC GND	P8	55
	LOGIC GND	P8	56
	LOGIC GND	P8	57
	+5V LOGIC	P8	58
	+5V LOGIC	P8	59
	+5V LOGIC	P8	60
	+12V LAMP	P8	61
	TIMER RESET	P8	62
	CR MUTE BUS	P8	63
	ST MUTE BUS	P8	64
	FS	P8	65
	SHIELD	P8	66
	FADER REFERENCE LOW	P8	67
		P8	68
	CUE AUDIO	P8	69
	AUDIO GND	P8	70
	AUDIO GND	P8	71
	AUDIO GND	P8	72
	AUDIO GND	P8	73
	+48V PHANTOM	P8	74
	+16V AUDIO	P8	75
	+16V AUDIO	P8	76
	-16V AUDIO	P8	77
	-16V AUDIO	P8	78
	FADER START ENABLE	P8	79
		P8	80
	PGM2 OUT L +	P8	81
	PGM3 OUT L +	P8	82
	PGM2 OUT R +	P8	83
	PGM3 OUT R +	P8	84
	SEND/CALLER +	P8	85
	CALL AUDIO +	P8	86
	LOGIC GND	P8	87
	LOGIC GND	P8	88
	LOGIC GND	P8	89
	+5V LOGIC	P8	90
	+5V LOGIC	P8	91
	+5V LOGIC	P8	92
	+12V LAMP	P8	93
	CUE/TALK CR	P8	94
	CR MIC O/L	P8	95
	ST MIC O/L	P8	96

MONITOR

		P9	1
	SHIELD	P9	2
	FADER REFERENCE HIGH	P9	3
		P9	4
		P9	5
	AUDIO GND	P9	6
	AUDIO GND	P9	7
	AUDIO GND	P9	8
	AUDIO GND	P9	9
	+48V PHANTOM	P9	10
	+16V AUDIO	P9	11
	+16V AUDIO	P9	12
	-16V AUDIO	P9	13
	-16V AUDIO	P9	14
	DSP GO	P9	15
		P9	16
	SHIELD	P9	17
	SHIELD	P9	18
	SHIELD	P9	19
	SHIELD	P9	20
	SHIELD	P9	21
	SHIELD	P9	22
	LOGIC GND	P9	23
	LOGIC GND	P9	24
	LOGIC GND	P9	25
	+5V LOGIC	P9	26
	+5V LOGIC	P9	27
	+5V LOGIC	P9	28
	+12V LAMP	P9	29
	KEEP ALIVE	P9	30
	CR WARNING	P9	31
	ST WARNING	P9	32
	256FS	P9	33
	64FS	P9	34
		P9	35
		P9	36
		P9	37
	AUDIO GND	P9	38
	AUDIO GND	P9	39
	AUDIO GND	P9	40
	AUDIO GND	P9	41
	+48V PHANTOM	P9	42
	+16V AUDIO	P9	43
	+16V AUDIO	P9	44
	-16V AUDIO	P9	45
	-16V AUDIO	P9	46
	*SYSTEM RESET	P9	47
	TEL * MIX MINUS BOTH	P9	48
	PGM2 OUT L -	P9	49
	PGM3 OUT L -	P9	50
	PGM2 OUT R -	P9	51
	PGM3 OUT R -	P9	52
	SEND/CALLER -	P9	53
	CALL AUDIO -	P9	54
	LOGIC GND	P9	55
	LOGIC GND	P9	56
	LOGIC GND	P9	57
	+5V LOGIC	P9	58
	+5V LOGIC	P9	59
	+5V LOGIC	P9	60
	+12V LAMP	P9	61
	TIMER RESET	P9	62
	CR MUTE BUS	P9	63
	ST MUTE BUS	P9	64
	FS	P9	65
	SHIELD	P9	66
	FADER REFERENCE LOW	P9	67
		P9	68
	CUE AUDIO	P9	69
	AUDIO GND	P9	70
	AUDIO GND	P9	71
	AUDIO GND	P9	72
	AUDIO GND	P9	73
	+48V PHANTOM	P9	74
	+16V AUDIO	P9	75
	+16V AUDIO	P9	76
	-16V AUDIO	P9	77
	-16V AUDIO	P9	78
	FADER START ENABLE	P9	79
		P9	80
	PGM2 OUT L +	P9	81
	PGM3 OUT L +	P9	82
	PGM2 OUT R +	P9	83
	PGM3 OUT R +	P9	84
	SEND/CALLER +	P9	85
	CALL AUDIO +	P9	86
	LOGIC GND	P9	87
	LOGIC GND	P9	88
	LOGIC GND	P9	89
	+5V LOGIC	P9	90
	+5V LOGIC	P9	91
	+5V LOGIC	P9	92
	+12V LAMP	P9	93
	CUE/TALK CR	P9	94
	CR MIC O/L	P9	95
	ST MIC O/L	P9	96

(SPARE) RLS/MIC PRE

		P10	1
	SHIELD	P10	2
	FADER REFERENCE HIGH	P10	3
		P10	4
		P10	5
	AUDIO GND	P10	6
	AUDIO GND	P10	7
	AUDIO GND	P10	8
	AUDIO GND	P10	9
	+48V PHANTOM	P10	10
	+16V AUDIO	P10	11
	+16V AUDIO	P10	12
	-16V AUDIO	P10	13
	-16V AUDIO	P10	14
	DSP GO	P10	15
		P10	16
	SHIELD	P10	17
	SHIELD	P10	18
	SHIELD	P10	19
	SHIELD	P10	20
	SHIELD	P10	21
	SHIELD	P10	22
	LOGIC GND	P10	23
	LOGIC GND	P10	24
	LOGIC GND	P10	25
	+5V LOGIC	P10	26
	+5V LOGIC	P10	27
	+5V LOGIC	P10	28
	+12V LAMP	P10	29
	KEEP ALIVE	P10	30
		P10	31
	256FS	P10	32
	64FS	P10	33
MASTER FADER WIPER *		P10	34
		P10	35
		P10	36
	AUDIO GND	P10	37
	AUDIO GND	P10	38
	AUDIO GND	P10	39
	AUDIO GND	P10	40
	+48V PHANTOM	P10	41
	+16V AUDIO	P10	42
	+16V AUDIO	P10	43
	-16V AUDIO	P10	44
	-16V AUDIO	P10	45
	*SYSTEM RESET	P10	46
TEL * MIX MINUS BOTH		P10	47
	PGM2 OUT L -	P10	48
	PGM3 OUT L -	P10	49
	PGM2 OUT R -	P10	50
	PGM3 OUT R -	P10	51
	SEND/CALLER -	P10	52
	CALL AUDIO -	P10	53
	LOGIC GND	P10	54
	LOGIC GND	P10	55
	LOGIC GND	P10	56
	+5V LOGIC	P10	57
	+5V LOGIC	P10	58
	+5V LOGIC	P10	59
	+12V LAMP	P10	60
		P10	61
		P10	62
		P10	63
		P10	64
	FS	P10	65
	SHIELD	P10	66
FADER REFERENCE LOW		P10	67
		P10	68
	CUE AUDIO	P10	69
	AUDIO GND	P10	70
	AUDIO GND	P10	71
	AUDIO GND	P10	72
	AUDIO GND	P10	73
	+48V PHANTOM	P10	74
	+16V AUDIO	P10	75
	+16V AUDIO	P10	76
	-16V AUDIO	P10	77
	-16V AUDIO	P10	78
FADER START ENABLE		P10	79
		P10	80
	PGM2 OUT L +	P10	81
	PGM3 OUT L +	P10	82
	PGM2 OUT R +	P10	83
	PGM3 OUT R +	P10	84
	SEND/CALLER +	P10	85
	CALL AUDIO +	P10	86
	LOGIC GND	P10	87
	LOGIC GND	P10	88
	LOGIC GND	P10	89
	+5V LOGIC	P10	90
	+5V LOGIC	P10	91
	+5V LOGIC	P10	92
	+12V LAMP	P10	93
		P10	94
		P10	95
		P10	96

AUDIO_GND

MFADER_WIPER7

AUDIO_GND

FS_LINK_OUT

DIGITAL OUTPUT

	MIX DATA	P11	1
	256FS MIX CLOCK	P11	2
	FADER REFERENCE HIGH	P11	3
	CUE CONTROL	P11	4
		P11	5
AUDIO_GND	AUDIO GND	P11	6
AUDIO_GND	AUDIO GND	P11	7
AUDIO_GND	AUDIO GND	P11	8
AUDIO_GND	AUDIO GND	P11	9
+48V_PHANTOM	+48V PHANTOM	P11	10
+16V_AUDIO	+16V AUDIO	P11	11
+16V_AUDIO	+16V AUDIO	P11	12
-16V_AUDIO	-16V AUDIO	P11	13
-16V_AUDIO	-16V AUDIO	P11	14
DSP_GO	DSP GO	P11	15
		P11	16
	SHIELD	P11	17
	SHIELD	P11	18
	SHIELD	P11	19
	SHIELD	P11	20
	SHIELD	P11	21
	SHIELD	P11	22
LOGIC_GND	LOGIC GND	P11	23
LOGIC_GND	LOGIC GND	P11	24
LOGIC_GND	LOGIC GND	P11	25
+5V_LOGIC	+5V LOGIC	P11	26
+5V_LOGIC	+5V LOGIC	P11	27
+5V_LOGIC	+5V LOGIC	P11	28
+12V_LAMP	+12V LAMP	P11	29
KEEP_ALIVE	KEEP ALIVE	P11	30
		P11	31
		P11	32
		P11	33
DISPLAY_VU/*PPM	DISPLAY VU/*PPM	P11	34
MASTER_FADER_WIPER_2	MASTER FADER WIPER 2	P11	35
*PGM2/PGM3	*PGM2/PGM3	P11	36
		P11	37
AUDIO_GND	AUDIO GND	P11	38
AUDIO_GND	AUDIO GND	P11	39
AUDIO_GND	AUDIO GND	P11	40
AUDIO_GND	AUDIO GND	P11	41
+48V_PHANTOM	+48V PHANTOM	P11	42
+16V_AUDIO	+16V AUDIO	P11	43
+16V_AUDIO	+16V AUDIO	P11	44
-16V_AUDIO	-16V AUDIO	P11	45
-16V_AUDIO	-16V AUDIO	P11	46
SYSTEM_RESET	*SYSTEM RESET	P11	47
TEL1_MM_BOTH	TEL * MIX MINUS BOTH	P11	48
	PGM2 OUT L -	P11	49
	PGM3 OUT L -	P11	50
	PGM2 OUT R -	P11	51
	PGM3 OUT R -	P11	52
	SEND/CALLER -	P11	53
	CALL AUDIO -	P11	54
LOGIC_GND	LOGIC GND	P11	55
LOGIC_GND	LOGIC GND	P11	56
LOGIC_GND	LOGIC GND	P11	57
+5V_LOGIC	+5V LOGIC	P11	58
+5V_LOGIC	+5V LOGIC	P11	59
+5V_LOGIC	+5V LOGIC	P11	60
+12V_LAMP	+12V LAMP	P11	61
		P11	62
		P11	63
		P11	64
		P11	65
FS_MIX_CLOCK	FS MIX CLOCK	P11	66
FADER_REFERENCE_LOW	FADER REFERENCE LOW	P11	67
		P11	68
CUE_AUDIO	CUE AUDIO	P11	69
AUDIO_GND	AUDIO GND	P11	70
AUDIO_GND	AUDIO GND	P11	71
AUDIO_GND	AUDIO GND	P11	72
AUDIO_GND	AUDIO GND	P11	73
+48V_PHANTOM	+48V PHANTOM	P11	74
+16V_AUDIO	+16V AUDIO	P11	75
-16V_AUDIO	-16V AUDIO	P11	76
-16V_AUDIO	-16V AUDIO	P11	77
FADER_START_ENABLE	FADER START ENABLE	P11	78
		P11	79
		P11	80
PGM2_OUT_L+	PGM2 OUT L +	P11	81
PGM3_OUT_L+	PGM3 OUT L +	P11	82
PGM2_OUT_R+	PGM2 OUT R +	P11	83
PGM3_OUT_R+	PGM3 OUT R +	P11	84
SEND/CALLER+	SEND/CALLER +	P11	85
CALL_AUDIO+	CALL AUDIO +	P11	86
LOGIC_GND	LOGIC GND	P11	87
LOGIC_GND	LOGIC GND	P11	88
LOGIC_GND	LOGIC GND	P11	89
+5V_LOGIC	+5V LOGIC	P11	90
+5V_LOGIC	+5V LOGIC	P11	91
+5V_LOGIC	+5V LOGIC	P11	92
+12V_LAMP	+12V LAMP	P11	93
		P11	94
		P11	95
		P11	96

SDATA_OUT

256FS_LINK_OUT

CUE_CTL

1N5817 ST

E0 PHANTOM_GND
E1 AUDIO_GND
E2 AUDIO_GND
E3 +48V_PHANTOM
E4 +16V_AUDIO
E5 -16V_AUDIO
E6 LOGIC_GND
E7 +5V_LOGIC
E8 +12V_LAMP

NOTE : AUDIO COMMON AND LOGIC COMMON ARE TIED TOGETHER ON EVERY MOTHER BOARD.

VU/*PPM
MFADER_WIPER2
*PGM2/PGM3

+5V LOGIC	J2	1	+5V_LOGIC
LED POWER	J2	2	
LOGIC GND	J2	3	
LED/SHLD GND	J2	4	AUDIO_GND
LED/SHLD GND	J2	5	
DISPLAY SERIAL DATA +	J2	6	DIS_SDATA1
DISPLAY SERIAL DATA -	J2	7	DIS_SDATA2
VU/*PPM	J2	8	VU/*PPM
*PGM2/PGM3	J2	9	*PGM2/PGM3
*SYSTEM RESET	J2	10	SYSTEM_RESET

DSP INTERCONNECT

IN

		1	
		2	
		3	
256FS LINK IN		4	256FS_LINK_IN
FS LINK IN		5	FS_LINK_IN
SERIAL LINK DATA IN		6	SDATA_IN

SDATA_1	96	P12	SERIAL DATA 1
CUE_ON_1	95	P12	CUE ON 1
PGM1_ON_1	94	P12	PGM1 ON 1
SDATA_2	93	P12	SERIAL DATA 2
CUE_ON_2	92	P12	CUE ON 2
PGM1_ON_2	91	P12	PGM1 ON 2
SDATA_3	90	P12	SERIAL DATA 3
CUE_ON_3	89	P12	CUE ON 3
PGM1_ON_3	88	P12	PGM1 ON 3
SDATA_4	87	P12	SERIAL DATA 4
CUE_ON_4	86	P12	CUE ON 4
PGM1_ON_4	85	P12	PGM1 ON 4
SDATA_5	84	P12	SERIAL DATA 5
CUE_ON_5	83	P12	CUE ON 5
PGM1_ON_5	82	P12	PGM1 ON 5
SDATA_6	81	P12	SERIAL DATA 6
CUE_ON_6	80	P12	CUE ON 6
PGM1_ON_6	79	P12	PGM1 ON 6
	78	P12	
TEL1_ON	77	P12	TEL 1 ON ASSIGN
	76	P12	
	75	P12	
TEL2_ON	74	P12	TEL 2 ON ASSIGN
CUE_CTL	73	P12	CUE CONTROL
FADER_REF_LOW	72	P12	FADER REFERENCE LOW
256FS_LINK_OUT	71	P12	256FS LINK OUT
FS_LINK_OUT	70	P12	FS LINK OUT
FS	69	P12	FS
AUDIO_GND	68	P12	LOGIC GND
AUDIO_GND	67	P12	LOGIC GND
+5V_LOGIC	66	P12	+5V LOGIC
+5V_LOGIC	65	P12	+5V LOGIC
FADER_WIPER_1	64	P12	FADER WIPER 1
O/L_ON_1	63	P12	O/L ON 1
PGM2_ON_1	62	P12	PGM2 ON 1
FADER_WIPER_2	61	P12	FADER WIPER 2
O/L_ON_2	60	P12	O/L ON 2
PGM2_ON_2	59	P12	PGM2 ON 2
FADER_WIPER_3	58	P12	FADER WIPER 3
O/L_ON_3	57	P12	O/L ON 3
PGM2_ON_3	56	P12	PGM2 ON 3
FADER_WIPER_4	55	P12	FADER WIPER 4
O/L_ON_4	54	P12	O/L ON 4
PGM2_ON_4	53	P12	PGM2 ON 4
FADER_WIPER_5	52	P12	FADER WIPER 5
O/L_ON_5	51	P12	O/L ON 5
PGM2_ON_5	50	P12	PGM2 ON 5
FADER_WIPER_6	49	P12	FADER WIPER 6
O/L_ON_6	48	P12	O/L ON 6
PGM2_ON_6	47	P12	PGM2 ON 6
MFADER_WIPER1	46	P12	MASTER FADER WIPER 1
	45	P12	
TEL1_ID	44	P12	TEL 1 IDENTIFICATION
MFADER_WIPER2	43	P12	MASTER FADER WIPER 2
VU/*PPM	42	P12	DISPLAY VU/*PPM
TEL2_ID	41	P12	TEL 2 IDENTIFICATION
DSP_GO	40	P12	DSP GO
SLDATA_OUT	39	P12	SERIAL LINK DATA OUT
SLDATA_IN	38	P12	SERIAL LINK DATA IN
64FS	37	P12	64FS
AUDIO_GND	36	P12	LOGIC GND
AUDIO_GND	35	P12	LOGIC GND
+5V_LOGIC	34	P12	+5V LOGIC
+5V_LOGIC	33	P12	+5V LOGIC
SYSTEM_RESET	32	P12	*SYSTEM RESET
FADER_ON_1	31	P12	FADER ON 1
PGM3_ON_1	30	P12	PGM3 ON 1
DIS_SDATA1	29	P12	DISPLAY SERIAL DATA 1
FADER_ON_2	28	P12	FADER ON 2
PGM3_ON_2	27	P12	PGM3 ON 2
DIS_SDATA2	26	P12	DISPLAY SERIAL DATA 2
FADER_ON_3	25	P12	FADER ON 3
PGM3_ON_3	24	P12	PGM3 ON 3
	23	P12	
FADER_ON_4	22	P12	FADER ON 4
PGM3_ON_4	21	P12	PGM3 ON 4
	20	P12	
FADER_ON_5	19	P12	FADER ON 5
PGM3_ON_5	18	P12	PGM3 ON 5
	17	P12	
FADER_ON_6	16	P12	FADER ON 6
PGM3_ON_6	15	P12	PGM3 ON 6
	14	P12	
	13	P12	
	12	P12	
	11	P12	
	10	P12	
*PGM2/PGM3	9	P12	*PGM2/PGM3
FADER_REF_HIGH	8	P12	FADER REFERENCE HIGH
FS_LINK_IN	7	P12	FS LINK IN
256FS_LINK_IN	6	P12	256FS LINK IN
256FS	5	P12	256FS
AUDIO_GND	4	P12	LOGIC GND
AUDIO_GND	3	P12	LOGIC GND
+5V_LOGIC	2	P12	+5V LOGIC
+5V_LOGIC	1	P12	+5V LOGIC

PACIFIC RESEARCH & ENGINEERING CORPORATION

SIZE	DRAWING NUMBER	REV
D	92-1009	C
	2-22-1999_14:36	SHEET 2 OF 2

REVISIONS				
REV	ECO #	DESCRIPTION	DATE	APPROVAL
A	none	initial schematic	2-19-97	T. Staros

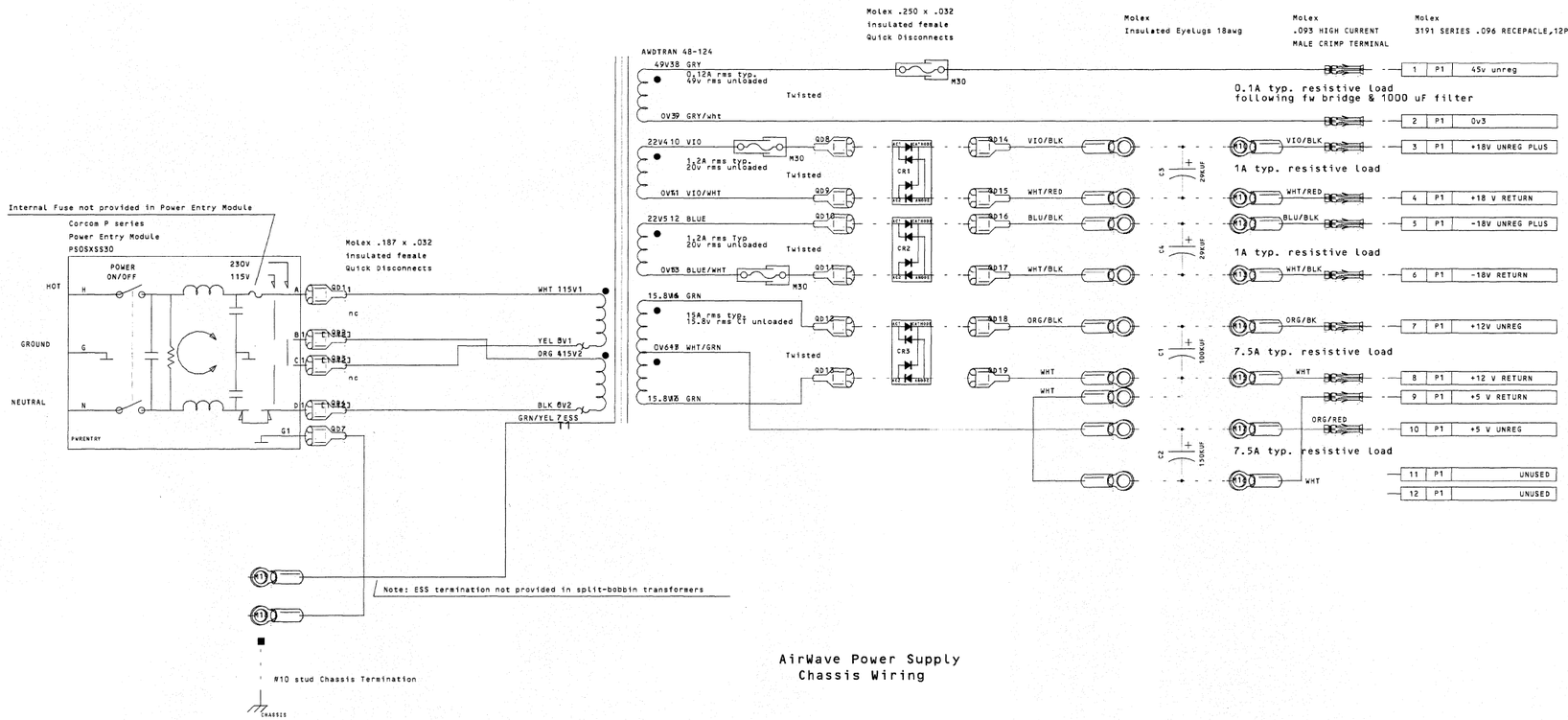

AirWave Power Supply
Chassis Wiring

Assy # 95-955-3

AirWave Power Supply
Regulator Board

See Schematic 92-955-3

APPROVALS	DATE
USED ON	AirWave

PACIFIC RESEARCH & ENGINEERING CORPORATION

SCHEMATIC
AIRWAVE UNIVERSAL PWR SUPPLY, CHASSIS

SIZE	DRAWING NUMBER	REV
D	92-1015	A

Last Saved: 9-18-1998_10:16 | SHEET 1 OF 1

REVISIONS				
REV	ECO #	DESCRIPTION	DATE	APPROVAL
A	none	Initial design	9-2-98	T. Staros
A	MD-181	Mfg Dev adj. up 5v to 5.35v	12/4/98	T. Staros

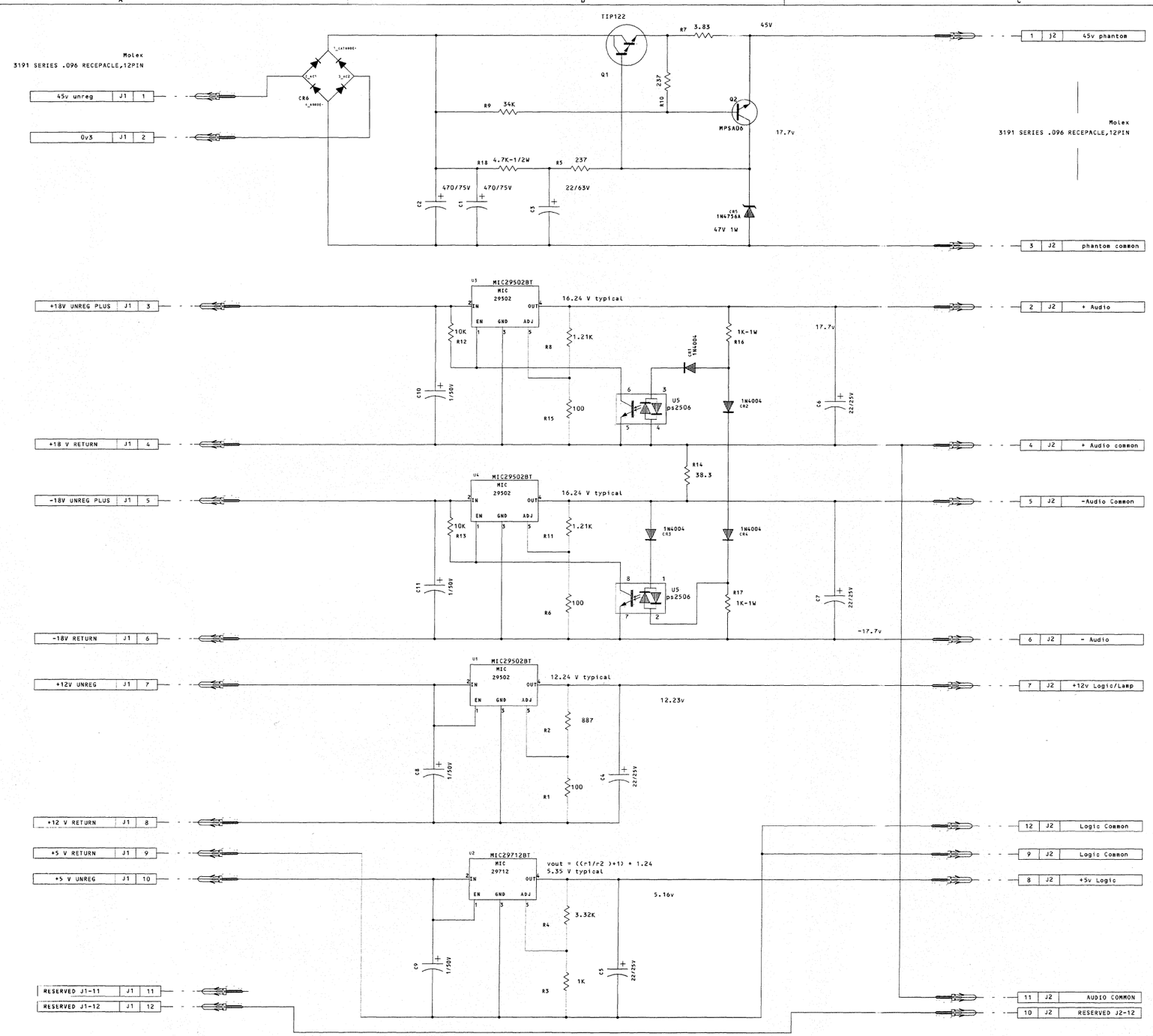

Emperically, measured 59* C case @ 4A w/ 23* C ambient, blocked bottom ventalation
w/ 2.6v margin at 6.5A, & 2* C/W, that is a 34* C rise
59 + 34* C= 93* C. A margin of 27* C below max Junction temp.
This would imply that ambient temp could be as high as 50* C
Max operating temp is still limited to 40* C

APPROVALS	DATE

Use? ON AirWave

PACIFIC RESEARCH & ENGINEERING CORPORATION

SCHEMATIC

AIRWAVE UNIVERSAL PWR REG. BOARD

SIZE	DRAWING NUMBER	REV
D	92-955-3	A

Last Saved: 12-4-1998_11:38 SHEET 1 OF 1

Accessories

7

PR&E has a full line of logic cables designed for use with the AirWave Digital console and the *QuikBilt II* modular cabinetry. *QuikBilt* II cabinetry is economical, rapid-assembly, studio furniture designed for use with the AirWave console family. *QuikBilt II* cabinetry can be configured to create individualized studio furniture packages in either stand-up or sit-down styles.

PR&E's *PrimeLine* furniture line can also be used with an AirWave Digital console. *PrimeLine* offers pre-assembled cabinet components, in stand-up or sit-down heights, with pre-cut console and wiring access holes. *PrimeLine* cabinets can also be factory pre-wired since the cabinets are shipped blanket-wrapped via van line.

BUTTON ENGRAVING

Input modules, and the optional Telco modules, come standard with their red and yellow button caps engraved ON and OFF. Custom engraving on the button caps can be ordered at the time of purchase, or engraved replacement button caps can be ordered at the time of installation once the input sources have been determined.

Each button cap can have up to two lines of engraving with up to four alphanumeric characters and a ½ character punctuation divider (space, period, hyphen, slash, backslash, etc.) on each line.

Engraving is normally done on the yellow button cap to identify the A input source on the top line and the B input source on the bottom line.

Custom engraving is specified when a blank button cap is ordered. For a yellow button cap, order PR&E # 25-872. For a red button cap, order PR&E # 25-871. For a white button cap, as used for the Talkback button, order PR&E # 25-870.

FADER KNOBS

Input modules come standard with white fader knobs. The optional Telco modules come with black knobs. Various colored fader knobs are also available. The table identifies the PR&E part numbers by knob color and typical source.

PR&E #	Color	Source
32-710-1	*black*	*Telco*
32-712-1	*red*	*Microphone*
32-714-1	*yellow*	*Cart decks*
32-715-1	*green*	*CD players / turntable*
32-716-1	*blue*	*Cassettes / reel-to-reels*
32-719-1	*white*	*Remotes*
32-720-1	*gray*	*Other Studios*
32-721-1	*orange*	*Multitrack channels*

CONSOLE REMOTE CONTROL PANELS

Any open console position (except for the Monitor, Timer and Output module positions) can be used to hold a remote control panel.

Tape Remote Panels

There are two tape remote panels available for the AirWave consoles: 99-991-1 and 99-992-1. Each uses a single module space in the console.

The 99-991-1 is a single tape machine remote with five control buttons (Play, Stop, Record, Forward and Reverse). A 24-pin Molex connector is located at the top of the panel for easy interfacing to a tape machine using standard PR&E logic cables. The mating Molex connector and pins are included with the panel.

The 99-992-1 contains two separate five-button controllers in one panel. Two Molex connectors are located at the top of the panel.

99-991-1
Tape Remote, single machine

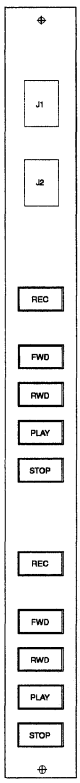

99-992-1
Tape Remote, two machines

Custom Remote Control Panels

Blank module panels (PR&E # 80-1551) can be used to create custom control panels. The maximum width switch/button cap the panels can accommodate is 1" [25.40 mm] wide.

Because there are no bottom openings on the AirWave chassis, an opening must be punched at the top of the panel, in the area covered by the meter panel, for the switch and lamp wiring to exit the mainframe. The use of a panel-mount connector is recommended.

Custom remote panels can also be fabricated by PR&E, contact a sales representative for more information.

Blank Panel Dimensions
PR&E # 80-1551

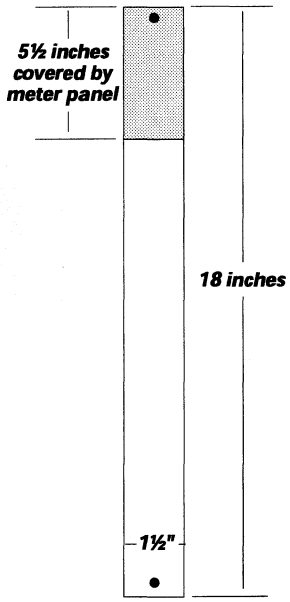

GUEST PANELS

There are two Guest Mic Control Panels available for the AirWave consoles. PR&E # 99-949-1 is the cabinet-mount version and 99-949-2 is the turret panel-mount version. Each panel has four engraved buttons (Talkback, Cough, On, Off) with integral lamps. The Guest Panel schematic and the cable drawing for the 99-716-CU cable are on pages 3 and 4, respectively.

LOGIC CONTROL CABLES

To assist in logic cable design and construction, logic wiring diagrams for many popular peripheral devices are available from the PR&E Technical Support Department.

Contact a sales representative for information about PR&E pre-made peripheral logic cables.

J4: Housing, wafer, 10-pin female locking Molex # 22-01-2107 (PR&E # 15-524
Terminals, gold, female crimp Molex # 08-58-0110 (PR&E # 15-8)

S1 - S4: Switch, 17mm JAE # 11LC17-0 (PR&E # 25-873)
Lamp, JAE # 11LB17-0 (PR&E # 12-101)

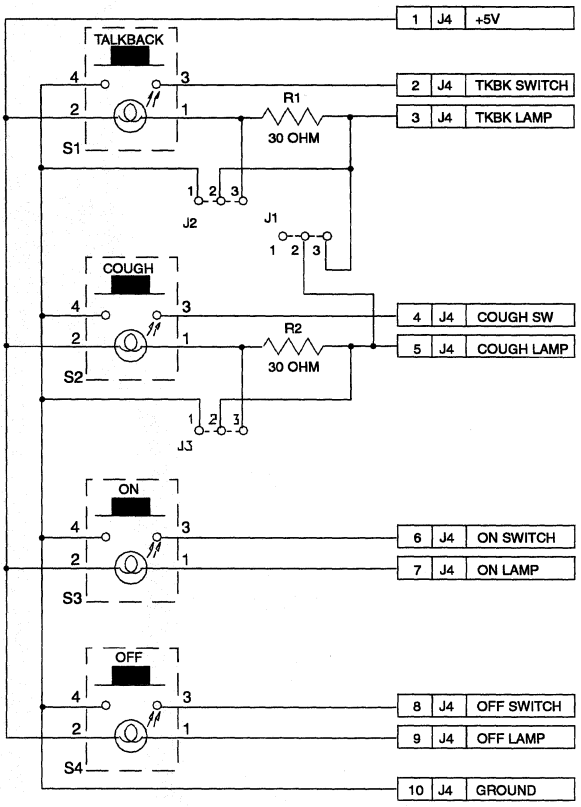

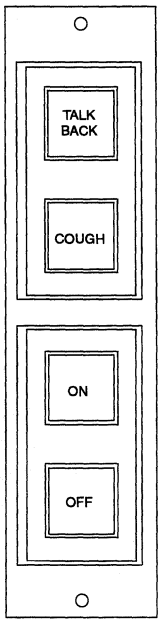

FRONT VIEW

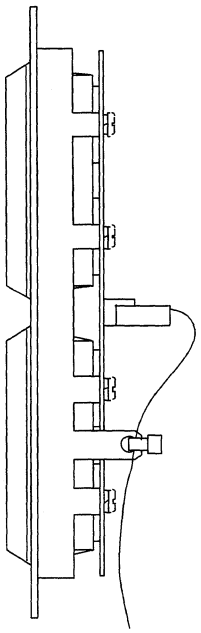

RHS VIEW

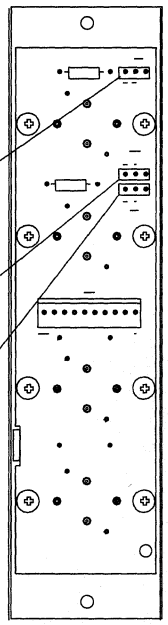

REAR VIEW

J2 Jumper 1 - 2 for INTEGRITY. Provides static half-illumination for TALKBACK lamp.

J2 Jumper 2 - 3 for AIRWAVE. Provides full-illumination for TALKBACK lamp when pin 3 is grounded.

J3 Jumper 1 - 2 for INTEGRITY. Provides static half-illumination for COUGH lamp.

J3 Jumper 2 - 3 for AIRWAVE. Provides full-illumination for COUGH lamp when pin 5 is grounded.

J1 Jumper 1 - 2 for INTEGRITY.

J1 Jumper 2 - 3 for AIRWAVE. Provides "Logic Active Tally" to enable illumination of TALKBACK and COUGH lamps.

99-949-2
GUEST PANEL
TURRET MOUNT
SHOWN

THIS DOCUMENT APPLIES TO 99-949-1 AND 99-949-2	TITLE: GUEST PANEL, CABINET/TURRET MOUNT INTEGRITY, AIRWAVE				
PACIFIC RESEARCH & ENGINEERING CORPORATION	DRAWN: SJQ / RLM	DATE: 17-DEC-98	DWG. NO.: 71-949	REV.: C	
	SHEET: 1 OF 1	APVD.: 1-JUN-97			

J1: Housing, 24-pin AMP Mod IV # 2-87631-0 (PR&E # 14-513)
Terminals, female AMP Mod IV # 102128-1 (PR&E # 15-938-1)

J2: Housing, wafer, 10-pin female locking Molex # 22-01-2107 (PR&E # 15-524)
Terminals, crimp, gold female Molex # 08-56-0110 (PR&E # 15-8)

Cable: 9-conductor Belden # 9423 or equivalent

Wire: 26 AWG white hookup, UL1429 or equivalent

INPUT MODULE LOGIC FUNCTION	J1 Pin		J2 Pin	GUEST PANEL FUNCTION
+5 VDC	10	BLK	1	Tally +VDC
Talkback (-)	20	WHT	2	Talkback Switch
On Tally	17	RED	7	On Lamp
Off Tally	16	GRN	9	Off Lamp
Logic Active	15	BRN	5	Talkback/Cough Lamp
Logic Ground	1	BLU	10	Switch Common
On (-)	7	ORN	6	On Switch
Off (-)	8	YEL	8	Off Switch
Cough (-)	9	VIO	4	Cough Switch
+5 VDC Logic	6	WHT		
Ext. Cntrl In (+)	18			
Logic Ground	2	WHT		
Tally Common	14			

THIS DOCUMENT APPLIES TO 99-716-CU	TITLE: CABLE, LOGIC, MIC INPUT MODULE TO GUEST PANEL (99-949-x), AIRWAVE				
PACIFIC RESEARCH & ENGINEERING CORPORATION	DRAWN: SJQ / RLM	DATE: 14-AUG-97	DWG. NO.: 71-716	REV.: C	
	SHEET: 1 OF 1	APVD.			

10/98 ILLUSTRATOR 7.01 / RLM

J1, J2: HOUSING, 24-PIN FEMALE, MOLEX #03-06-1241 (PR&E # 15-705)
TERMINALS, FEMALE, MOLEX #02-06-1103 (PR&E 15-2)

S1 - S10: SWITCH, 1 N.O. / 1 N.C. MOMENTARY, EAO 31 (PR&E # 25-119)

LAMPS: FOR -0: NO LAMPS
FOR -1: 5 VOLT #7348 (PR&E # 12-64)
FOR -2: 14 VOLT #386 (PR&E # 12-51)
FOR -3: 18 VOLT #388 (PR&E # 12-52)

LENSCAPS: S1, S6 - RED, "RECORD" (PR&E # 25-120)
S2, S7 - WHITE, "FWD" (PR&E # 25-125)
S3, S8 - WHITE, "RWD" (PR&E # 25-125)
S4, S9 - GREEN, "PLAY" (PR&E # 25-123)
S5, S10 - YELLOW, "STOP" (PR&E # 25-122)

CABLE: 12 COND., BELDEN #8457 OR EQUIV.

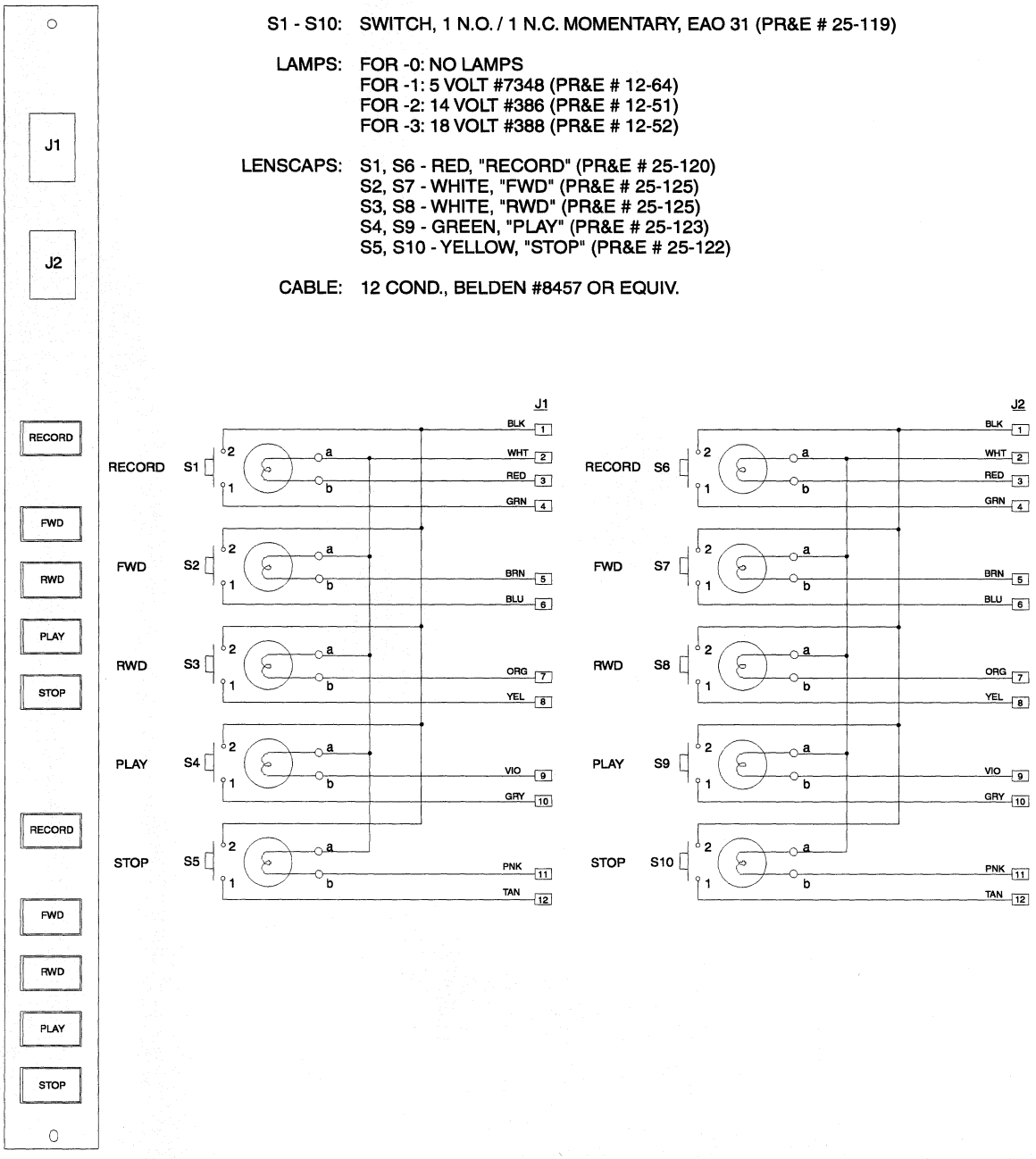

THIS DOCUMENT APPLIES TO 99-992-0 THRU 99-992-3	TITLE: AIRWAVE, DUAL TAPE REMOTE & WIRING				
PACIFIC RESEARCH & ENGINEERING CORPORATION	DRAWN: JT / SR / RLM	DATE: 12-AUG-97	DWG. NO.: 71-992	REV.: A
	SHEET: 1 OF 1	APVD.		

9/98 ILLUSTRATOR 7.01 / RL

Index

Note: *Page numbers listed as Chapter-Page.*

A

A Input 3-2
AC Connection 2-3
AES/EBU Connection 2-7
AirWave Digital Console
- Block Diagram 6-2
- General Information 1-1, 2-1
- Power Supply 1-2, 2-3, 4-9, 5-7, 6-42
- Specifications 1-3
- Warranty 1-5

Analog RLS 4-7
Analog SIM 4-2, 6-29
AMP MOD IV Connector 2-5
Audio
- Cable Type 2-5
- Connector pinout 2-6
- Reset 2-13
- Wiring, General 2-5

Auto, Timer 3-8
Auto-Feed 4-4
Auxiliary outputs 2-20

B

B Input 3-2
B Logic Interface 2-9, 6-31
Bargraph Meters 2-20, 3-9, 4-8
Battery Backup 2-4
Button Cap Engraving 7-1

C

Cabling 2-5
Clock
- Option Switches 2-4
- Setting the Time 2-4

Clock/Timer Assembly 4-8, 5-6, 6-32
Control Room 3-7, 4-6
Control Room Logic 2-21
Countertop Cutouts 2-1
Crimp Tool 2-6
Cue 3-2, 3-7, 4-6
Cue Speaker 5-7

D

Digital RLS 4-7
Digital SIM 4-2, 6-30
Direct Outputs 2-21
DSP 4-4

E

Engraved Button Caps 7-1
Event Timer 3-8, 4-5

F

Fader
- Knob colors 7-1
- Replacement Part # 5-2
- Service 5-5

Fuse Replacement 5-7

G

Gain Trim 3-1, 3-2, 3-3, 3-7
Grounding 2-3

H

Hold, Timer 3-8
Hybrid, Connection 2-19, 3-3

I

Input Module 1-1, 2-18, 3-2, 4-2, 5-5, 6-6
Input Module Logic 2-11

K

Keep Alive 2-4, 5-7

Note: *Page numbers listed as Chapter-Page.*

L

Level Meters 3-9, 4-8
Logic
- Cable Type 2-5
- Connector Pinout 2-13
- Interface 2-9
- Guides ..... 2-13 to 2-16

M

Mainframe 1-1, 2-1, 4-1
- Configuration 2-2
- Grounding 2-3
- Installation ..... 2-1 to 2-4
- Module placement 2-2

Meter Panel 2-2, 3-9, 5-8
Mic Preamp Module 1-1, 3-1, 4-1, 5-5, 6-3
Microphone, Connection 2-17
Microphone, Logic 2-10, 2-14
Module Servicing 5-3
Monitor Module .. 1-2, 2-21, 3-7, 4-6, 5-6, 6-16
Motherboard 1-1, 4-4, 6-36

O

Off-Line Bus 3-3, 4-4
Ordering Information 5-1
Output Module ... 1-2, 2-20, 3-6, 4-5, 5-6, 6-10

P

Parts Lists 5-2
Peripheral Device Logic 2-11
Power Supply 1-2, 2-3, 4-9, 5-7
- Grounding 2-3, 2-5
- Schematics 6-42, 6-43

Program Bus 4-5

R

Ready Logic 2-11
Receptacle Contacts 2-5
Recorder (To Tape) Connection 2-19
Reference Levels 1-3
Remote Functions 2-10
Remote Control Panels 7-2
Remote Line Selector (see RLS)
Repair Services 5-1
Replacement Parts 5-2
Reset, Timer 2-22, 4-5
RLS 1-2, 2-22, 3-5, 4-7, 6-20

S

S/PDIF Inputs 2-8
Servicing ..... Chapter 5
Shield, Cable 2-5
Spare Parts Lists 5-2
Spare Parts Ordering 5-1
Specifications 1-3
Start, Timer 3-8
Start Pulse 2-13
Stop, Timer 3-8
Stop Pulse 2-13
Studio Mic Connection & Logic 2-14
Studio Warning Lamp 2-12
Switchboard Assemblies 6-27, 6-28
SIM Cards 4-2

T

Tally Outputs 2-11
Telco Module 1-2, 2-19, 3-3, 4-3, 6-8
Telco Operation 3-4
Time of Day, Setting 2-4
Timer 1-2, 2-4, 3-7, 6-32
Timer Control 1-2, 2-23, 3-8, 4-7, 5-7, 6-33

U

Unbalanced Connections 2-8
Universal Power Supply 4-9, 5-7

W

Warning Lamp 2-12
Warranty 1-5
Wiring
- Audio 2-5
- Logic 2-9
- Peripherals ..... 2-13 to 2-16
- Preparation 2-5