1394 Design Schematic (TSBKPCITST)

The enclosed information is a copy of the documentation supplied to Texas Instruments by Solectron (Austin, TX) as documentation for a test board designed and built by Solectron for Texas Instruments. Texas Instruments does not guarantee the accuracy of this information. There are no known errors in this document.

EVM-0010D
Rev. D

1394 Solutions Leader

IMPORTANT NOTICE

Texas Instruments (TI) reserves the right to make changes to its products or to discontinue any semiconductor product or service without notice, and advises its customers to obtain the latest version of relevant information to verify, before placing orders, that the information being relied on is current.

TI warrants performance of its semiconductor products and related software to the specifications applicable at the time of sale in accordance with TI's standard warranty. Testing and other quality control techniques are utilized to the extent TI deems necessary to support this warranty. Specific testing of all parameters of each device is not necessarily performed, except those mandated by government requirements.

Certain applications using semiconductor products may involve potential risks of death, personal injury, or severe property or environmental damage ("Critical Applications").

TI SEMICONDUCTOR PRODUCTS ARE NOT DESIGNED, INTENDED, AUTHORIZED, OR WARRANTED TO BE SUITABLE FOR USE IN LIFE-SUPPORT APPLICATIONS, DEVICES OR SYSTEMS OR OTHER CRITICAL APPLICATIONS.

Inclusion of TI products in such applications is understood to be fully at the risk of the customer. Use of TI products in such applications requires the written approval of an appropriate TI officer. Questions concerning potential risk applications should be directed to TI through a local SC sales office.

In order to minimize risks associated with the customer's applications, adequate design and operating safeguards should be provided by the customer to minimize inherent or procedural hazards.

TI assumes no liability for applications assistance, customer product design, software performance, or infringement of patents or services described herein. Nor does TI warrant or represent that any license, either express or implied, is granted under any patent right, copyright, mask work right, or other intellectual property right of TI covering or relating to any combination, machine, or process in which such semiconductor products or services might be or are used.

TSBKPCITST DESIGNER KIT

- Interfacing TSB12LV21A- PCILynx™ Link Layer Controller to TSB21LV03A-200Mbps Physical Layer Controller
- Interfacing Serial EEPROM to TSB12LV21A
- Auxiliary Bus Implementation
- Local SRAM Interface
- RPL-ROM Implementation
- TI Lynxsoft™ Application Software

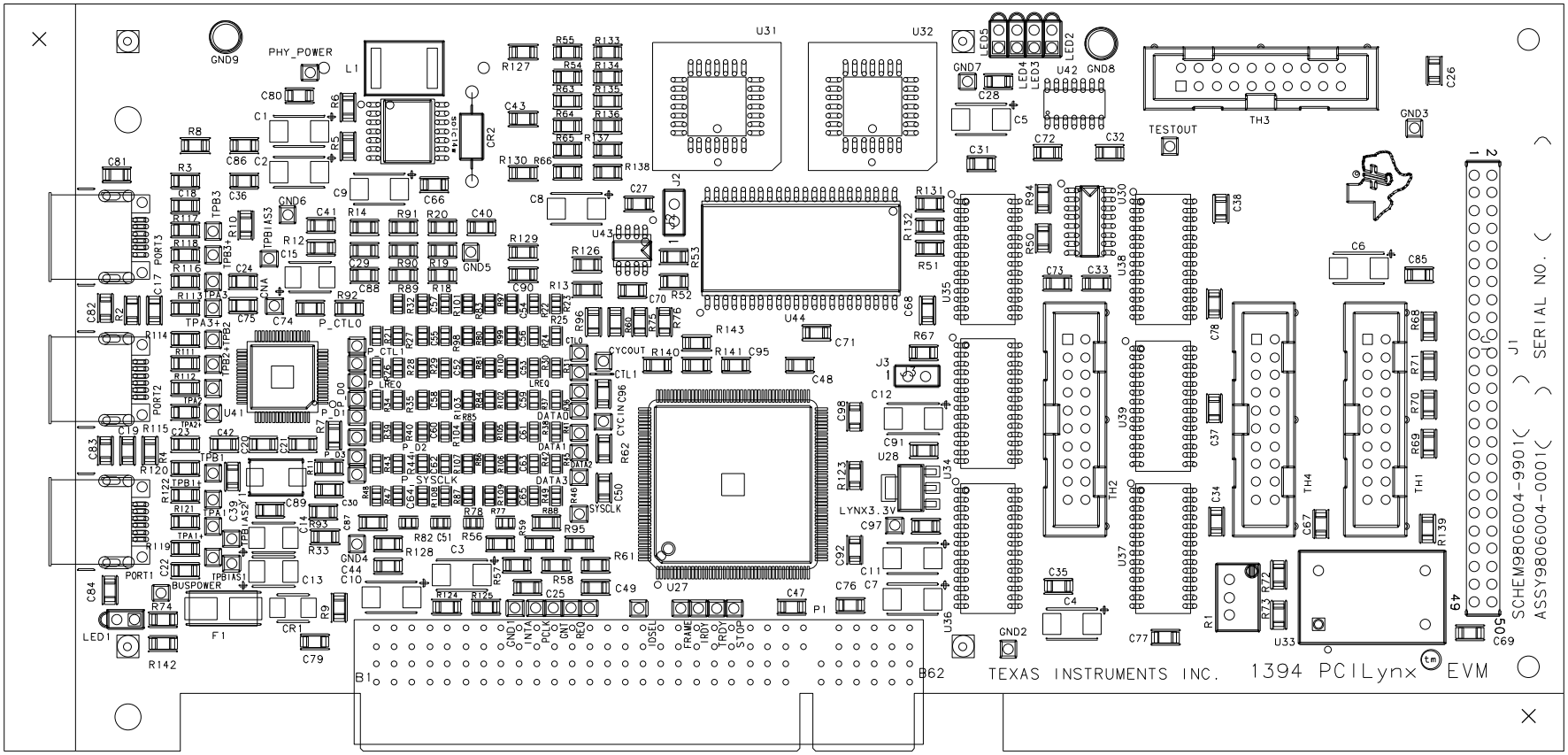

MP9806005 REV-*
1394 PCI LYNX EVAL
COMPONENT SIDE SILKSCREEN

SCALE 1X
TYPE III

TEXAS INSTRUMENTS
AUSTIN MENTOR
SHEET 7 OF 11

Revised 12/4/97, schematic revision D

These are things to keep in mind when looking at the TSBKPCITST Designer Kit reference design schematics. This is the design of a circuit board we use to test our chips in a PC environment in our lab.

Page 2 shows the circuitry for a 3 port - 200Mbps cable physical layer chip (TSB21LV03A) using an external 24.576MHz crystal for the clock reference. On this schematic page note that to disable isolation mode pin 62 (ISO-) should be tied high

All TP termination network resistors are 55Ohms, NOT 56.2Ohms.

The connections shown for the shields of PORTS 1->3 are not to the 1394-1995 standard. The terminals labeled 7 and 8 are both connected to the outside shield of the connector (the internal shields of the twisted pairs are connected to the terminal labeled 2, phy_gnd). The schematic shows all of the terminal 7 and 8 s as connected to chassis_gnd. This will connect all the chassis grounds on boards like this one on the 1394 bus together. The 1394-1995 standard recommended connection is to have the external shield connected to chassis ground through a 1MOhm resister in parallel with a 0.1 uF capacitor as shown in figure 3-30 in the 1394 Standard (rev8.0v2).

R13 must be 1K Ohm, not 10K Ohms.

The pinout shown for the TSB21LV03A is incorrect. Per the datasheet pin 28 is PC2, pin 29 is PC1 and pin 30 is PC0

The 1394-1995 standard coding for the Self-ID Packet is in table 4-29. This node is self-powered and supplies power to the cable. The amount of power is severely limited due to its source being the PCI Bus itself. It is specified at 6 watts minimum per PCI standard version 2.1. The correct value for these pins will be determined from the 1394-1995 table and the cable power distribution rules defined by the 1394 Architecture Working group.

2. Pages 3 & 4 shows the connections for the IEEE 1394-1995 Annex J suggested capacitive isolation between the PHY and link layer chip (link). Currently our link layers do not support this isolation scheme, but do support TI Bus Holder Isolation using an external implementation (TI Patent Pending). To remove the isolation circuitry, follow the instructions in notes 1 and 2.

Note that to disable isolation mode:

pin 62 (ISO-) on the TSB21LV03 should be tied high and
pin 136 (LINK_ISO#) on the TSB12LV21 should be tied high.

Note that it is recommended having 1.8KOhm pull down resistors on the CTL0 and CTL1 lines when NOT implementing isolation to avoid a potential hang condition on the PHY-link interface.

Note that as shown, the Annex J isolation is not functional even if supported by the link layer controller. Resistor values R23 and R25 must be the same as R22 and R24 respectively to correctly bias the network.

3. Page 5 shows the connections to the TSB12LV21A PCILynx link layer chip. On this schematic page note that to disable isolation mode pin 136 (LINK_ISO#) should be tied high (correctly called a 3.3V Vcc pin in the TSB12LV21A datasheet for this reason).

4. Page 6 contains the voltage regulator to provide 3.3V power to the PHY chips from cable power and power to the cable and a regulator to provide 3.3V power to the PCILynx chip.

5. Page 7 show connections to the RPL boot ROM, external local SRAM hooked to the PCILynx auxiliary bus, connections to the serial EEPROM, and an external connector to bring out the AUX bus in its ZOOM port application. There are two banks of SRAM which may be addressed either as one byte wide data or two byte wide data.

6. Page 8 shows connections to a VCO to supply an external zoom video clock if desired, and various test header connectors to aid in testing.

7. Page 9 is the power decoupling capacitors. Note that to IMPLEMENT isolation the zero Ohm resistors R127, R128, R129, and R130 need to be removed.

TI 1394 Applications Engineering

This TSBKPCITST host adapter was designed and manufactured for Texas Instruments by Solectron Texas.

Solectron Texas
12455 Research Blvd
Austin, TX 78759
Voice: (512) 425-4248
FAX: (512) 425-6509
Email:markcromptom@tx.slr.com

REVISIONS			
REV	ECN NO / CLASS / DRAFTER / DATE	DATE	APPROVED
•	Friday, November 7, 1997		

*** ADVANCE INFORMATION ***

NOTE:

These schematics have not been verified or tested and contain advance information concerning a technology in development. Function, specification, and pin assignment are all subject to change without notice."

Friday, November 7, 1997 1:18:35 pm

-1 QTY	ITEM NO	PART OR IDENTIFYING NUMBER	NOMENCLATURE || DESCRIPTION	NOTES

NEXT ASSY	USED ON
APPLICATION	

DWN	C. Storvik
CHK	
ENGR-DSGN	C. Storvik
ENGR-MGR	
QA	
MFG	
PROD SAF	
RLSE	

TEXAS INSTRUMENTS

CMS SYSTEMS DESIGN ENGINEERING

LOGIC DIAGRAM
LYNX - REV E

SIZE	FSCM NO.	DRAWING NO.
C	06668	9806004-9901

SCALE NONE

SHEET 01 OF 9

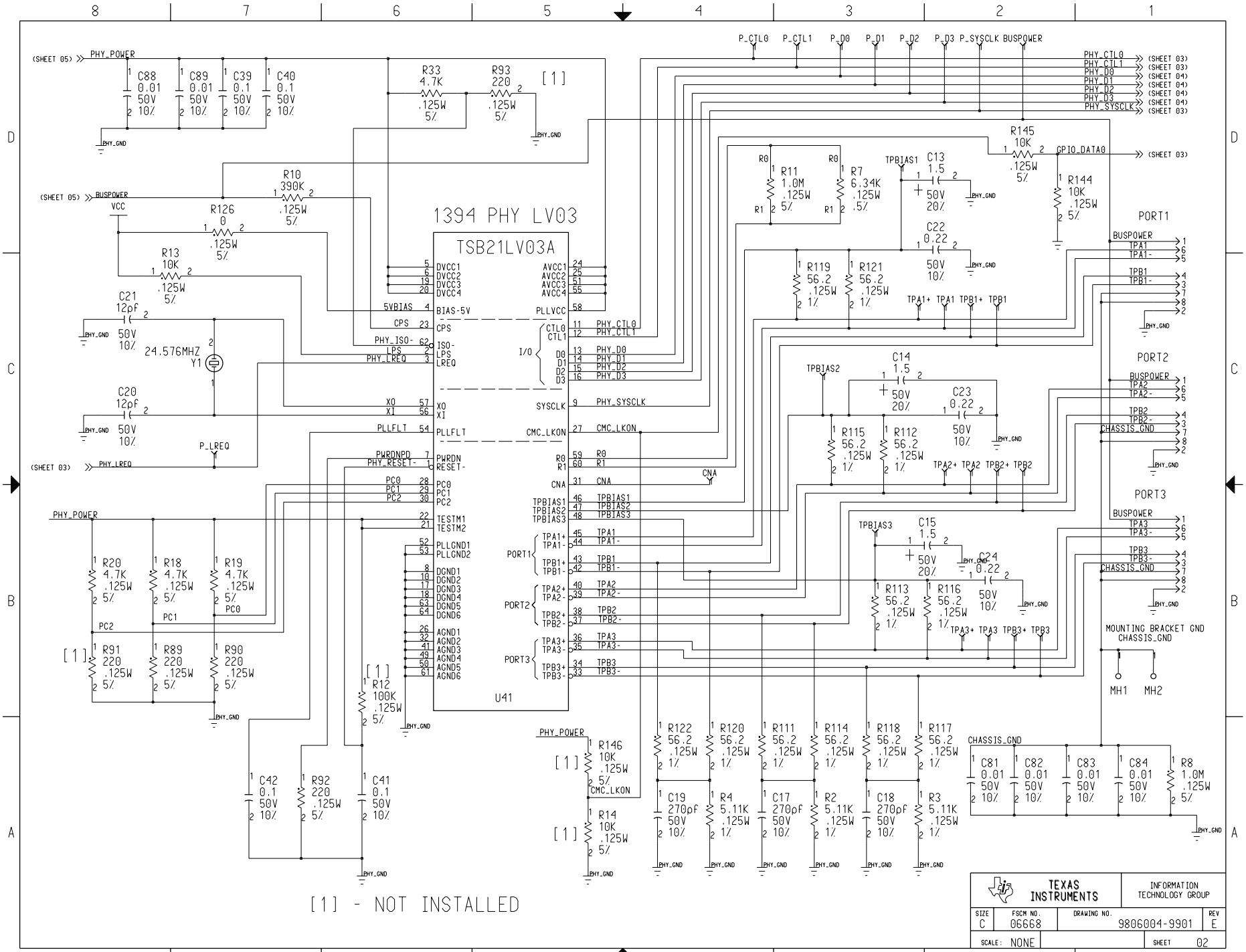
1394 PHY LV03
TSB21LV03A
U41
PHY_POWER
BUSPOWER
VCC
C88 0.01 50V 10%
C89 0.01 50V 10%
C39 0.1 50V 10%
C40 0.1 50V 10%
R33 4.7K .125W 5%
R93 220 .125W 5%
R10 390K .125W 5%
R126 0 .125W 5%
R13 10K .125W 5%
C21 12pf 50V 10%
C20 12pf 50V 10%
24.576MHZ Y1
P_LREQ
PHY_LREQ
PHY_ISO-
PHY_RESET-
PHY_GND
R20 4.7K .125W 5%
R18 4.7K .125W 5%
R19 4.7K .125W 5%
R91 220 .125W 5%
R89 220 .125W 5%
R90 220 .125W 5%
R12 100K .125W 5%
C42 0.1 50V 10%
R92 220 .125W 5%
C41 0.1 50V 10%
R146 10K .125W 5%
R14 10K .125W 5%
CMC_LKON
R11 1.0M .125W 5%
R7 6.34K .125W .5%
C13 1.5 50V 20%
C22 0.22 50V 10%
R119 56.2 .125W 1%
R121 56.2 .125W 1%
C14 1.5 50V 20%
C23 0.22 50V 10%
R115 56.2 .125W 1%
R112 56.2 .125W 1%
C15 1.5 50V 20%
C24 0.22 50V 10%
R113 56.2 .125W 1%
R116 56.2 .125W 1%
R145 10K .125W 5%
R144 10K .125W 5%
GPIO_DATA0
PORT1
PORT2
PORT3
TPA1 TPA1- TPB1 TPB1-
TPA2 TPA2- TPB2 TPB2-
TPA3 TPA3- TPB3 TPB3-
CHASSIS_GND
MOUNTING BRACKET GND
MH1 MH2
R122 56.2 .125W 1%
R120 56.2 .125W 1%
R111 56.2 .125W 1%
R114 56.2 .125W 1%
R118 56.2 .125W 1%
R117 56.2 .125W 1%
C19 270pf 50V 10%
R4 5.11K .125W 1%
C17 270pf 50V 10%
R2 5.11K .125W 1%
C18 270pf 50V 10%
R3 5.11K .125W 1%
C81 0.01 50V 10%
C82 0.01 50V 10%
C83 0.01 50V 10%
C84 0.01 50V 10%
R8 1.0M .125W 5%
[1] - NOT INSTALLED
TEXAS INSTRUMENTS
INFORMATION TECHNOLOGY GROUP
SIZE C
FSCM NO. 06668
DRAWING NO. 9806004-9901
REV E
SCALE: NONE
SHEET 02

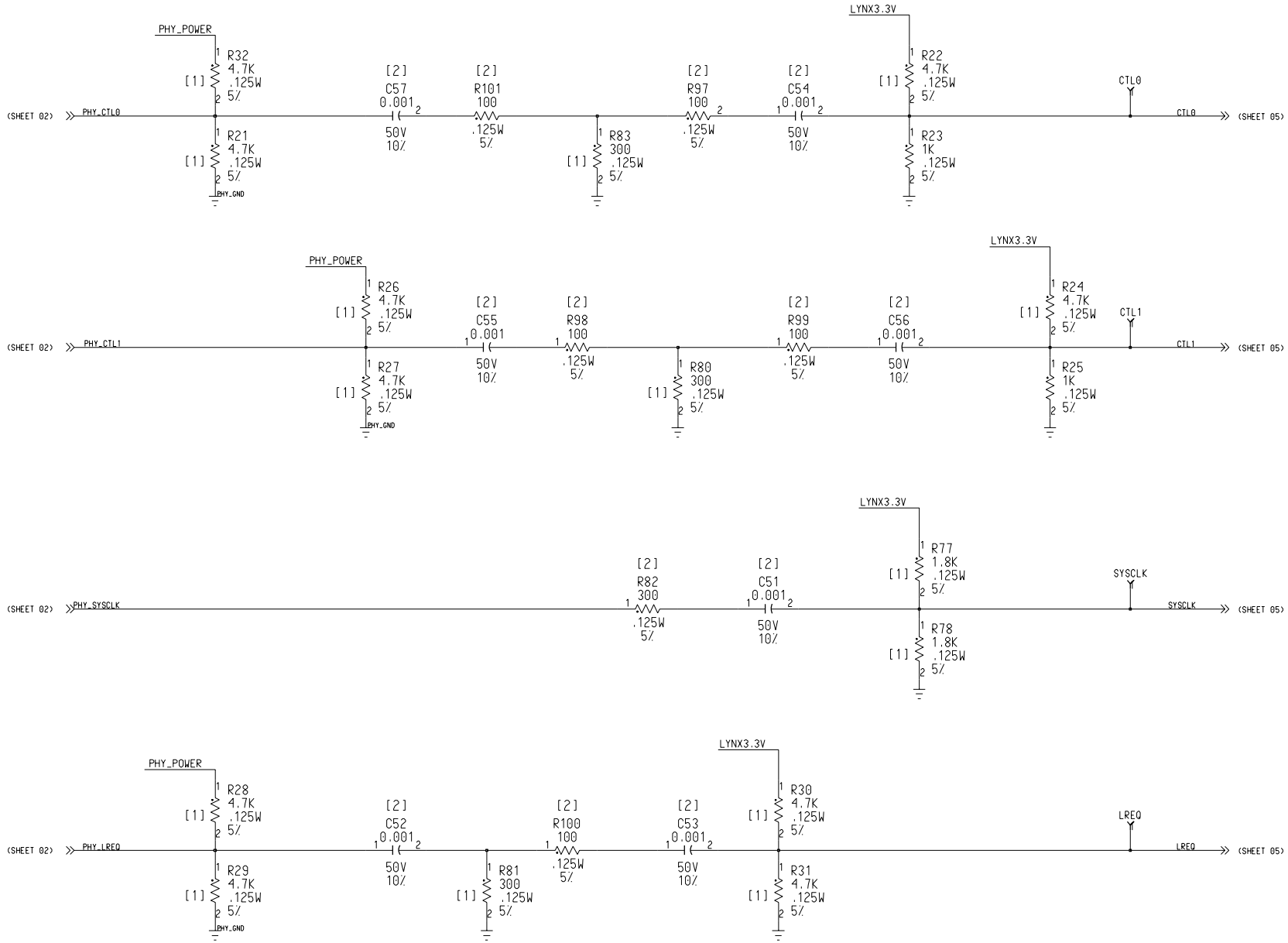

[1] PARTS NOT INSTALLED

[2] PARTS CHANGED TO 0 OHM RESISTORS

TEXAS INSTRUMENTS			INFORMATION TECHNOLOGY GROUP	
SIZE C	FSCM NO. 06668	DRAWING NO. 9806004-9901		REV E
SCALE: NONE			SHEET 03	

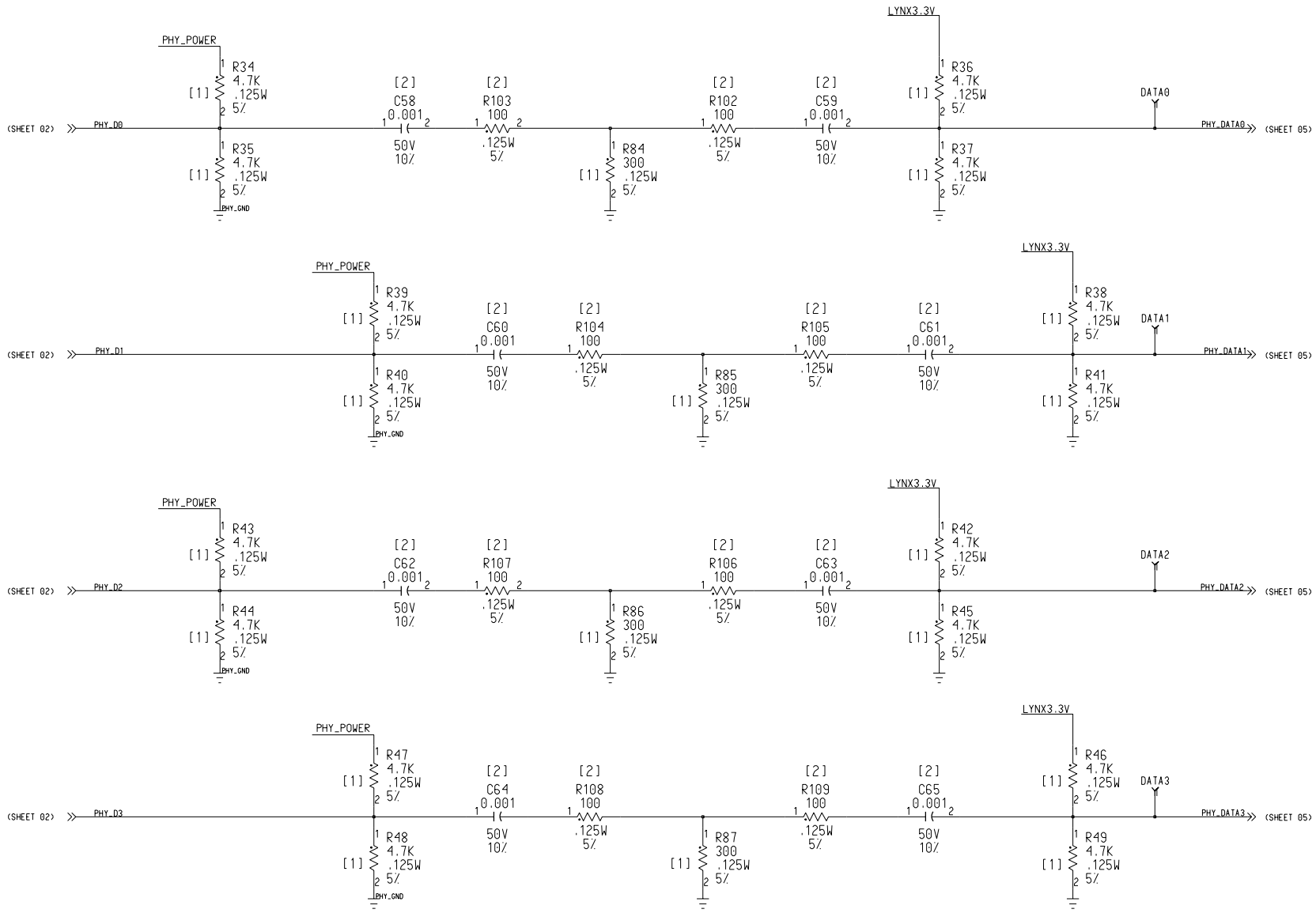

[1] PARTS NOT INSTALLED

[2] PARTS CHANGED TO 0 OHM RESISTORS

TEXAS INSTRUMENTS			INFORMATION TECHNOLOGY GROUP	
SIZE C	FSCM NO. 06668	DRAWING NO. 9806004-9901		REV E
SCALE: NONE			SHEET 04	

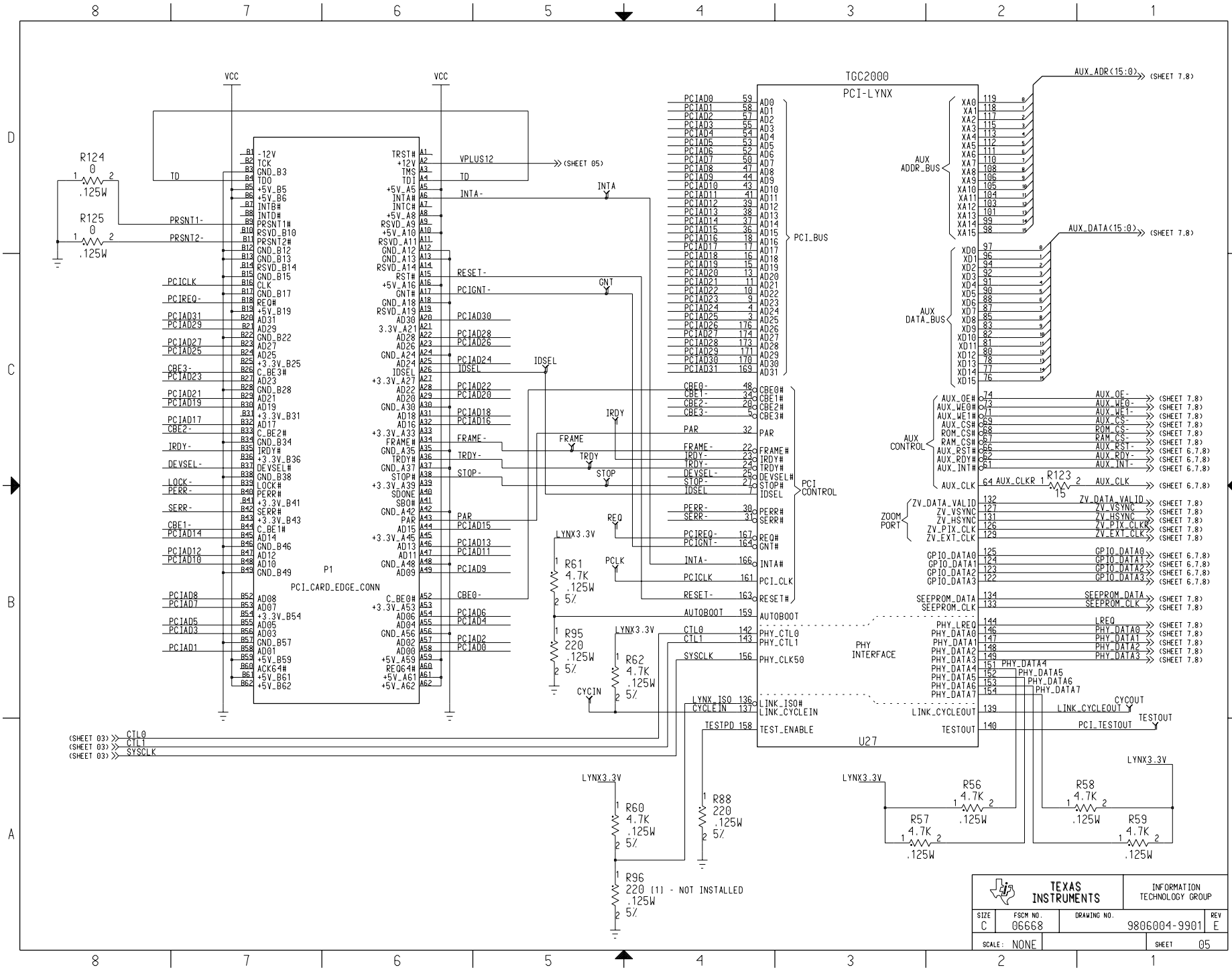
TGC2000
PCI-LYNX
P1
PCI_CARD_EDGE_CONN
PCI_BUS
PCI CONTROL
AUX ADDR_BUS
AUX DATA_BUS
AUX CONTROL
ZOOM PORT
PHY INTERFACE
U27
VCC
VPLUS12
(SHEET 05)
AUX_ADR(15:0)
AUX_DATA(15:0)
(SHEET 7,8)
R124 0 .125W
R125 0 .125W
R123 15
R61 4.7K .125W 5%
R95 220 .125W 5%
R62 4.7K .125W 5%
R60 4.7K .125W 5%
R88 220 .125W 5%
R96 220 (1) - NOT INSTALLED .125W 5%
R56 4.7K .125W
R57 4.7K .125W
R58 4.7K .125W
R59 4.7K .125W
LYNX3.3V
TEXAS INSTRUMENTS
INFORMATION TECHNOLOGY GROUP
SIZE C
FSCM NO. 06668
DRAWING NO. 9806004-9901
REV E
SCALE: NONE
SHEET 05

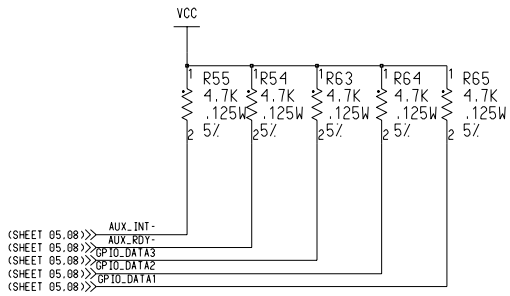

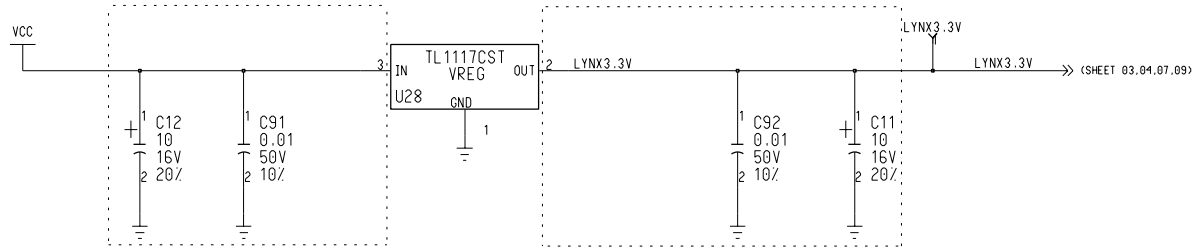

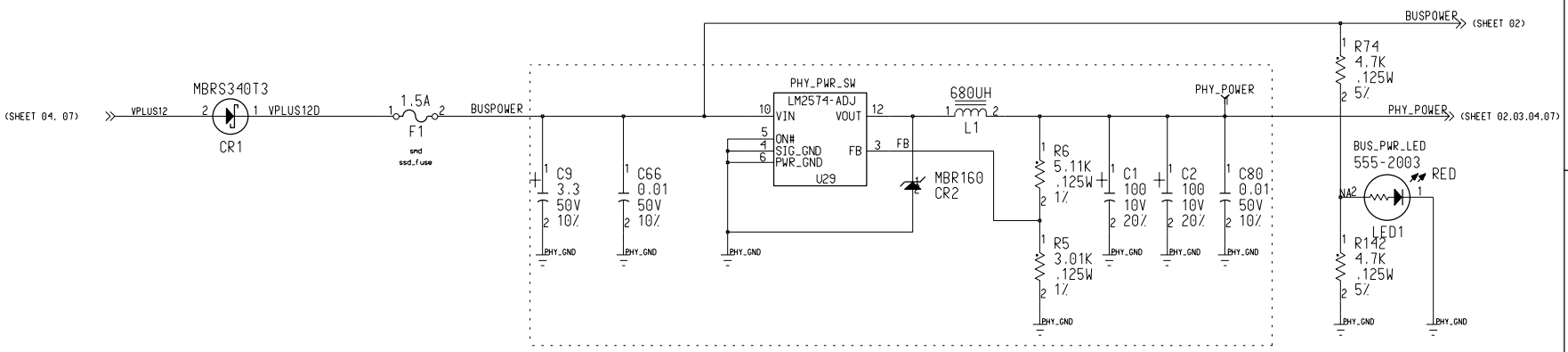

NOTE:
1. NO LOAD

TEXAS INSTRUMENTS			INFORMATION TECHNOLOGY GROUP
SIZE C	FSCM NO. 06668	DRAWING NO. 9806004-9901	REV E
SCALE: NONE			SHEET 06

ZOOM VIDEO CONNECTOR / SRAM, ROM, SEEPROM

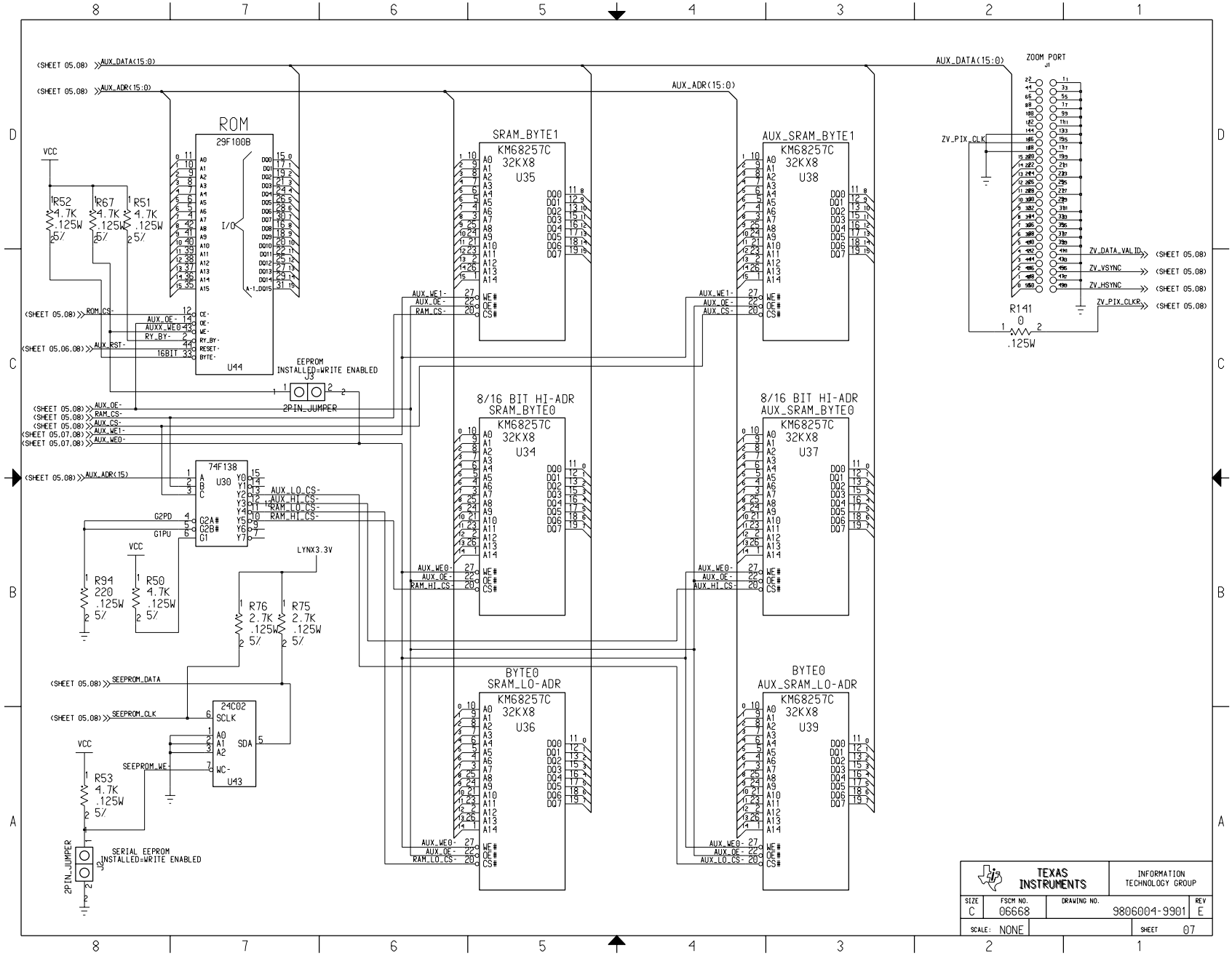

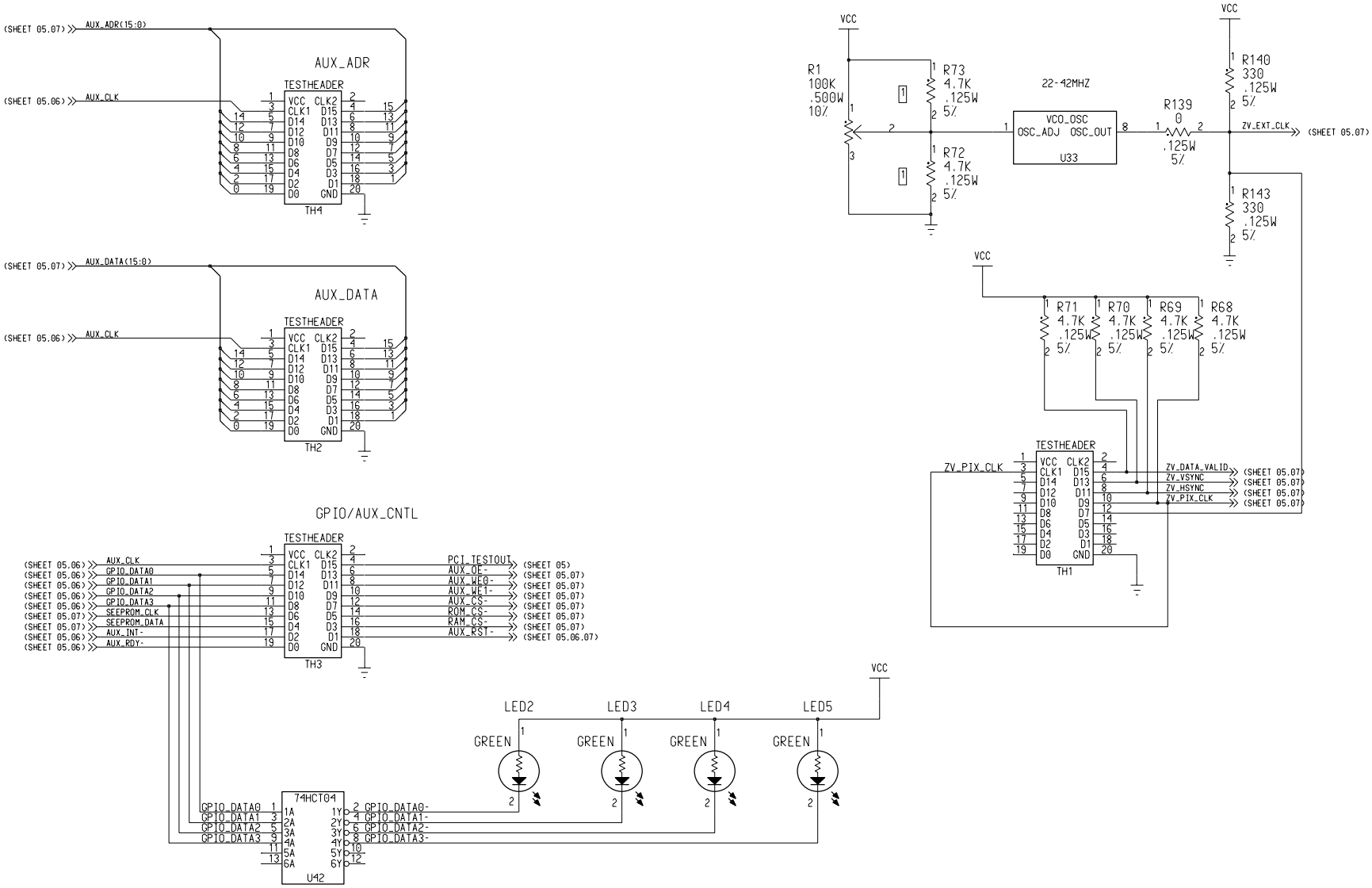

NOTES:

1. NO LOAD

TEXAS INSTRUMENTS			INFORMATION TECHNOLOGY GROUP
SIZE C	FSCM NO. 06668	DRAWING NO. 9806004-9901	REV E
SCALE: NONE			SHEET 08

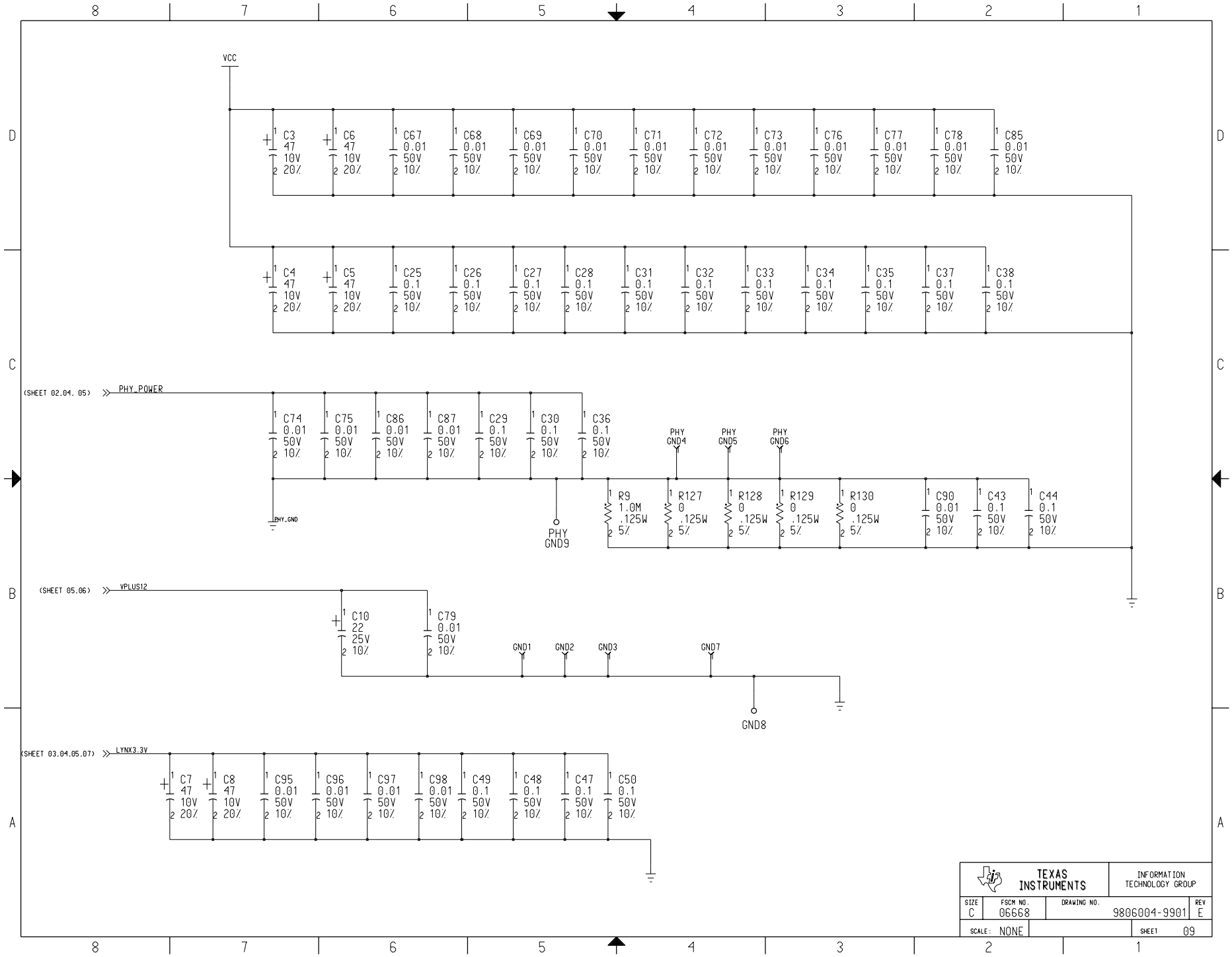
VCC
C3 47 10V 20%
C6 47 10V 20%
C67 0.01 50V 10%
C68 0.01 50V 10%
C69 0.01 50V 10%
C70 0.01 50V 10%
C71 0.01 50V 10%
C72 0.01 50V 10%
C73 0.01 50V 10%
C76 0.01 50V 10%
C77 0.01 50V 10%
C78 0.01 50V 10%
C85 0.01 50V 10%
C4 47 10V 20%
C5 47 10V 20%
C25 0.1 50V 10%
C26 0.1 50V 10%
C27 0.1 50V 10%
C28 0.1 50V 10%
C31 0.1 50V 10%
C32 0.1 50V 10%
C33 0.1 50V 10%
C34 0.1 50V 10%
C35 0.1 50V 10%
C37 0.1 50V 10%
C38 0.1 50V 10%
(SHEET 02.04. 05)
PHY_POWER
C74 0.01 50V 10%
C75 0.01 50V 10%
C86 0.01 50V 10%
C87 0.01 50V 10%
C29 0.1 50V 10%
C30 0.1 50V 10%
C36 0.1 50V 10%
PHY GND4
PHY GND5
PHY GND6
PHY_GND
PHY GND9
R9 1.0M .125W 5%
R127 0 .125W 5%
R128 0 .125W 5%
R129 0 .125W 5%
R130 0 .125W 5%
C90 0.01 50V 10%
C43 0.1 50V 10%
C44 0.1 50V 10%
(SHEET 05.06)
VPLUS12
C10 22 25V 10%
C79 0.01 50V 10%
GND1
GND2
GND3
GND7
GND8
(SHEET 03.04.05.07)
LYNX3.3V
C7 47 10V 20%
C8 47 10V 20%
C95 0.01 50V 10%
C96 0.01 50V 10%
C97 0.01 50V 10%
C98 0.01 50V 10%
C49 0.1 50V 10%
C48 0.1 50V 10%
C47 0.1 50V 10%
C50 0.1 50V 10%
TEXAS INSTRUMENTS
INFORMATION TECHNOLOGY GROUP
SIZE C
FSCM NO. 06668
DRAWING NO. 9806004-9901
REV E
SCALE: NONE
SHEET 09

TSBKPCITST "1394 EVM Card" P/N 9806004-1 Rev E assy / Rev A PWB
(made for Texas Instruments by Solectron Texas)
Upgrade to TSB21LV03A PHY

DESCRIPTION	Supplier	Part Number	Pkg	Qty	Reference Designator
RES, 15, 5%	KOA	RM73B2BT150J	1206	1	R123
RES, 56.2, 1%	KOA	RK73H2BT56R2	1206	12	R111 R112 R113 R114 R115 R116
					R117 R118 R119 R120 R121 R122
RES, 220, 5%, .125W	KOA	RM73B2BT221J	1206	7	R88 R89 R90 R92 R94 R95 R143
RES, 4.7K, 5%	KOA	RM73B2BT472J	1206	26	R18 R19 R20 R33 R50 R51 R52 R53
					R54 R55 R56 R57 R58 R59 R60 R61
					R62 R63 R64 R65 R67 R68 R69
					R70 R71 R74
RES, 0, n/a	KOA	RM73Z2BT	1206	9	R124 R125 R126 R127 R128 R129
					R130 R139 R141
RES, 1.0M, 5%	KOA	RM73B2BT105J	1206	2	R8 **R11**
RES, 6.34K, 0.5%	KOA	RK73H2BT6341D	1206	1	R7
RES, 390K, 5%	KOA	RM73B2BT394J	1206	1	R10
CAP, 0.01, 10%	KEMET	C1206C103K5RAC	1206	31	C66 C67 C68 C69 C70 C71 C72 C73
					C74 C75 C76 C77 C78 C79 C80 C81
					C82 C83 C84 C85 C86 C87 C88 C89
					C90 C91 C92 C95 C96 C97 C98
CAP, 47, 20%	KEMET	T491D476M010AS	2816	6	C3 C4 C5 C6 C7 C8
CAP, 1.5uF, 50V	KEMET	T491C155M050AS	2313	3	C13 C14 C15
CAP, 22uF, 25V	KEMET	TAJD226M025R	2816	1	C10
RES, 5.11K, %	KOA	RK73H2BT5111F	1206	4	R2 R3 R4 R6
FUSE, 1.5A	RayChem	SMD150-2	3820fuse	1	F1
CAP, 0.1, 10%	KEMET	C1206C104K5RAC	1206	24	C25 C26 C27 C28 C29 C30 C31 C32
					C33 C34 C35 C36 C37 C38 C39 C40
					C41 C42 C43 C44 C47 C48 C49 C50
CAP, 0.22, 10	AVX	12065C224KAT4A	1206	3	C22 C23 C24
XTAL, 24.576MHZ	FOX	FE 24.576 20PF	xtal_fe	1	Y1
1394 R/A Flat Header	Molex	53462-0611	pth-6pin	3	PORT1 PORT2 PORT3
RES, 10K, 5%, .125W	KOA	RM73B2BT103J	1206	2	R13 R144 R145
CAP, 12PF, 10%	KEMET	C1206C120K5GAC	1206	2	C20 C21
CAP, 270PF, 10%	KEMET	C1206C271J5GAC	1206	3	C17 C18 C19
PCI BRACKET	GLOBE	G5025	spec.	1	
HEX HEAD SCREW	MEDALIST	SEMS, 4-40 X ¼		2	
PCI-Lynx ASIC - Rev 2	TI-SC	tsb12lv21Apgf	pqfp176	1	U27
TSB21LV03A PHY	TI-SC	**TSB21LV03A**	qfp64	1	U41
Volt Reg, ADJ	Nat'l	LM2574HVM-ADJ	soic14w	1	U29
680uH, 20%	Renco	RL-1500-680	ind_4430	1	L1
680uH, 20%(alternate)	Renco	RL-1284-680	900cena	0	L1
2K-Bit Serial EEprom	Natl Semi	NM24C02M8	soic8	1	U43
2PIN_JUMPER	Samtec	TSW-102-07-T-S	2pin_header	2	J2 J3
29F100B	AMD	AM29F100B-90SC	soic44w	1	U44
DIODE, RED, .100C	DIALIGHT	555-2003	led	1	LED1
DIODE, GREEN	DIALIGHT	555-2303	led	4	LED2 LED3 LED4 LED5
KM68257CJ, 32KX8	Samsung	KM68257CJ-25	soj28	6	U34 U35 U36 U37 U38 U39
RES, 2.7K, 5%, .125W	KOA	RM73B2BT272J	1206	2	R75 R76

TSBKPCITST "1394 EVM Card" P/N 9806004-1 Rev E assy / Rev A PWB
(made for Texas Instruments by Solectron Texas)
Upgrade to TSB21LV03A PHY

DESCRIPTION	Supplier	Part Number	Pkg	Qty	Reference Designator
RES, 330, 5%, .125W	KOA	RM73B2BT331J	1206	1	R140
CAP, 10, 20%, 16V	Kemet	T491D106K016AS	2816	2	C11 C12
CAP, 100, 20%, 10V	Kemet	T495X107M010AS	2816	2	C1 C2
DIODE, MBR160	Motorola	MBR160	500cena	1	CR2
OSC	FOX	F1100E 24.000MHZ	osck4	1	U33
74F138	TI	SN74F138D	soic16	1	U30
74HCT04	TI	SN74HCT04D	soic14	1	U42
LT1117CST-3.3, VREG	Linear	LT1117CST-3.3	sot_223	1	U28
RES, 0, n/a	KOA	RM73Z2AT	805	29	C51 C52 C53 C54 C55 C56 C57 C58
					C59 C60 C61 C62 C63 C64 C65 R82
					R97 R98 R99 R100 R101 R102 R103
					R104 R105 R106 R107 R108 R109
DIODE, MBRS340T3	Motorola	MBRS340T3	diodea	1	CR1
RES, 1.0K, 5%, .125W	**KOA**	**RM73B2A102JT**	**805**	**2**	**R23 R25**
RES, 3.01K, 5%, .125W	**KOA**	**RM73B2BT3011J**	**1206**	**1**	**R5**
CAP, 3.3uF, 50V	KEMET	T491D335M050AS	2816	1	C9