Customer Engineering Diagrams

CONTROL DATA 1604-A COMPUTER

CONTROL DATA CORPORATION

Customer Engineering Diagrams

CONTROL DATA 1604-A COMPUTER

Pub. No. 60024300
January, 1966
Printed in the United States of America

CONTROL DATA CORPORATION

60024300

RECORD OF REVISIONS

REVISION	NOTES
E	ECN's 1-119 included in this printing.
F	Change Orders 9008 and 9067; pages 14, 21.0, 25, 26, 27, 30, and 53 revised.
G	Change Order 9240 (did not advance Product Designation level 1604A-123). Pages 5, 19.2, 24.1, 33, 57, 80.0, 80.1, 80.2, 80.3, 80.4, 80.6, 80.7, and 80.8 revised.
H (7-21-65)	Change Order 9986 and misc. corrections. New Product Designation 1604-A124. Pages 5, 9, 16, 19.6, 24.0, 28, 32, 42, 47.6, 49.3, 54.0, 54.1, 55.0, 55.1, 58 and 78 revised. Input Term Lists for pages 14 and 33 revised.
J (11-10-65)	Change Order 11539 and misc. corrections. New Product Designation 1604-A125. Pages 9, 24.0, 28 and 80.7 revised. Input Term Lists for 24.0 and 28 revised.

FORM CA 109

TABLE OF CONTENTS

CONTROL SEQUENCES

1 Key to Symbols Used On Logic Diagrams
2 Overall Logic Diagram
3 Sequence Control Chart
4 Sequence Exits
5 Read Next Instruction
6 Normal Jump
7 Zero Address Sequence
8 Read Operand (2 Pages)
9 Write Operand
10 Search and Transfer (3 Pages)
11 Iterative-Main Sequence
12 Iterative-Multiply and Divide Control
13 Iterative-Floating Point
14 Iterative-Round, Normalize, Final Floating Point Assembly
15 Iterative-End Sign Correction
16 External Function Sequence
17 Auxiliary Sequence (2 Pages)

CONTROL SECTION

18 U^1 and U^2 Registers (4 Pages)
19 Operation Code and Designator Translation (7 Pages)
20 U^2 Borrow Pyramid
21 R Register (2 Pages)
22 R Register Inverter Ranks I^2, I^3, I^4
23 B Registers (3 Pages)
24 P Register (2 Pages)
25 Computer Master Clear
26 Autoload Circuit
27 Autoload Wiring Diagram
28 Manual Control
29 Resynchronizing Counter
30 Sense and Interrupt Circuits
31 Interrupt Select and Sense Translators
32 Interrupt Scanner and IAR
33 Interrupt Sequence
34 Digit Display Gates
35 Breakpoint

BUFFER CONTROL SECTION

36 Common Control Register and Comparator
37 Control Registers (Upper)
38 Control Registers (Lower)
39 Control Register Control
40 Inverter Ranks I^7 and I^8
41 $I^7 \rightarrow X$, $Z \rightarrow I^1$, $CCR \rightarrow I^1$
42 High Speed Storage Sequence
43 Transfer I^7 to U^1
44 U^2, P^1, and CCR Translators
45 Auxiliary Scanner

ARITHMETIC SECTION

46 A and Q Register Control
47 A and Q Register (9 Pages)
48 Accumulator Borrow Pyramid (4 Pages)
49 X Register (5 Pages)
50 X Register Control (2 Pages)
51 Shift Control
52 Arithmetic Sensing Networks
53 Arithmetic Faults

STORAGE SECTION

54 Storage Sequence Control (2 Pages)
55 Bit Plane Circuits (2 Pages)
56 Address Selection (2 Pages)
57 Initiate Storage Reference
58 Storage Card Placement
59 Storage Selection (2 Pages)

INPUT-OUTPUT SECTION

60 Ready Resume Circuitry
61 Computer Input From External Equipment
62 External Function Inverters 0^0
63 Output Registers 0^1, 0^2, 0^3, and 0^4

CONSOLE INPUT-OUTPUT EQUIPMENT

64 Input Assembly Register
65 Output Disassembly Register
66 External Function Translator
67 Typewriter Control
68 Typewriter Interconnections
69 Paper Tape Punch Control
70 Paper Tape Punch Circuits
71 Paper Tape Reader Control
72 Paper Tape Reader Circuits
73 Paper Tape Reader and Punch Manual Controls

CONSOLE, CLOCK AND POWER

74 Clock Card Interconnections
75 General Power Distribution (2 Pages)
76 Main Cabinet Power Distribution
77 Console Power Distribution
78 Console Display Panel
79 Console Relay Chassis Map
80 Main Cabinet Cable Connections (9 Pages)
81 Console Cable Connections

SYMBOLS

SINGLE INVERTER - A SINGLE INVERTER INVERTS INPUT SIGNALS SO THAT A "1" INPUT GIVES A "0" OUTPUT AND A "0" INPUT GIVES A "1" OUTPUT. INPUTS TO THE SYMBOL ARE SHOWN BY ARROWHEADS.

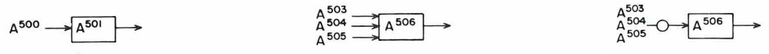

SINGLE INVERTER | SINGLE INVERTER WITH "OR" INPUTS | SINGLE INVERTER WITH "AND" INPUT

FLIP-FLOP (FF) - A FLIP-FLOP IS A TEMPORARY STORAGE DEVICE WITH TWO STABLE STATES DESIGNATED SET & CLEAR. WHEN A FF IS SET, THE SET OUTPUT IS A LOGICAL "1", WHEN CLEAR, THE CLEAR OUTPUT IS A "1". THE LOGICAL SYMBOL FOR A FF IS A SQUARE (FIG. A) FORMED BY THE COMBINATION OF TWO SINGLE INVERTER SYMBOLS. THE INTERCONNECTION OF THE TWO INVERTERS IS SHOWN IN FIG. B. BY CONVENTION, SET INPUTS & OUTPUTS ARE SHOWN ON THE UPPER OR LEFT HALF OF THE SYMBOL; CLEAR INPUTS & OUTPUTS ON THE LOWER OR RIGHT HALF. WITH THE EXCEPTION OF THE B REGISTER, THE SET INPUT IS **TO** THE EVEN NUMBERED INVERTER & THE SET OUTPUT IS **FROM** THE ODD INVERTER.

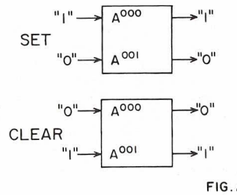

FIG. A

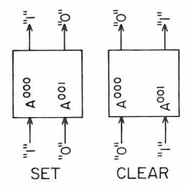

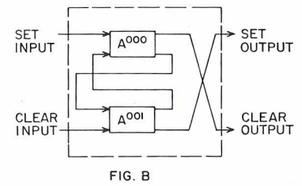

FIG. B

CONTROL DELAY - A CONTROL DELAY CONSISTS OF AN H^{---} PART, WHICH RECEIVES THE INPUT, AND A V^{---} OR N^{---} PART, WHICH PROVIDES THE OUTPUT. THE OUTPUT IS A CLOCKED PULSE WHICH IS DELAYED WITH RESPECT TO THE INPUT BY ONE PHASE TIME OF THE CLOCK (0.2 MICROSECOND).

CONVENTIONS APPLICABLE TO CONTROL DELAYS:

1. CLOCK PULSE INPUTS TO CONTROL DELAYS ARE NOT SHOWN ON THE DIAGRAMS AND MUST BE OBTAINED FROM THE EQUATION FILE.
2. AN ODD NUMBER INDICATES A CLOCK OUTPUT OF ODD PHASE AND AN EVEN NUMBER, OF EVEN PHASE.
3. THE TIME SCALES SHOWN ON ALL SEQUENCE DIAGRAMS ARE IN 0.2 MICROSECOND (1 CLOCK PHASE TIME) INTERVALS.

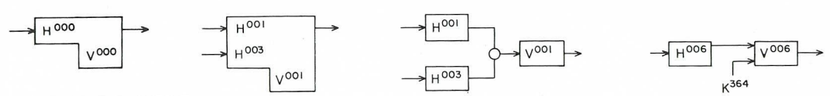

SINGLE INPUT & OUTPUT

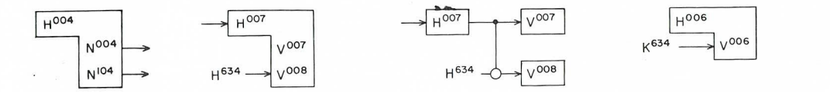

MULTIPLE OUTPUT

MULTIPLE INPUT
ONLY WHEN SECOND INPUT IS AN H^{---} TERM

CONDITIONED OUTPUT
WHEN SECOND INPUT IS OTHER THAN H^{---} TERM

TIME DELAY - A TIME DELAY IS USED TO DELAY THE TIME AT WHICH A "1" SIGNAL IS SENSED BY THE INPUT OF A CARD. IT WILL HAVE NEGLIGIBLE EFFECT ON A "0" SIGNAL. THE METHOD OF CONNECTING A TIME DELAY BETWEEN TWO LOGIC CARDS, **A** AND **B**, AND THE SYMBOL USED TO REPRESENT THIS CONNECTION ON A LOGIC DIAGRAM IS SHOWN BELOW.

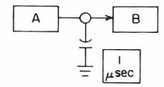

JACK ASSIGNMENTS

JACK ASSIGNMENTS INDICATE THE PHYSICAL LOCATION OF A PRINTED CIRCUIT CARD. ON LOGICAL DIAGRAMS, THE JACK ASSIGNMENTS ASSOCIATED WITH EACH SYMBOL APPEAR NEAR IT.

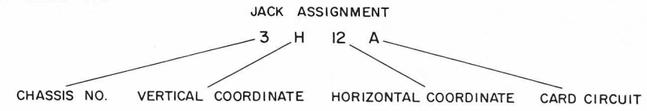

CONVENTIONS APPLICABLE TO JACK ASSIGNMENTS SHOWN ON THE DIAGRAMS:

1. WHEN MOST OF THE JACK ASSIGNMENTS ON A DIAGRAM ARE ON A COMMON CHASSIS, THE CHASSIS NUMBER IS OMITTED FROM THE JACK ASSIGNMENTS FOR THIS CHASSIS AND SPECIFIED IN A NOTE ON THE DIAGRAM.
2. THE OMISSION OF THE CARD CIRCUIT LETTER FROM A JACK ASSIGNMENT INDICATES CARD CIRCUIT B. (FOR FLIP-FLOPS WHICH INDICATE ONE JACK ASSIGNMENT FOR BOTH INVERTERS, THE OMISSION OF THE CARD CIRCUIT LETTER INDICATES CARD CIRCUIT A FOR THE EVEN-NUMBERED INVERTER AND CARD CIRCUIT C FOR THE ODD-NUMBERED INVERTER.)

SYMBOLIC REPRESENTATION OF EQUATIONS

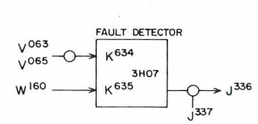

$K^{634} = K^{635} + V^{063}V^{065}$
3H07A : J^{336}:K^{635}
$K^{635} = K^{634} + W^{160}$
3H07C : K^{634}

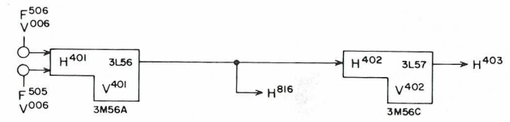

$H^{401} = V^{006}F^{505} + V^{006}F^{506} + C^{318}$
3L56B : V^{401}
$H^{402} = V^{401} + C^{319}$
3L57B : V^{402}

$V^{401} = H^{401} + C^{359}$
3M56A: H^{402} :H^{816}
$V^{402} = H^{402} + C^{358}$
3M56C : H^{403}

QUADRANT SYSTEM

TO FACILITATE THE LOCATION OF TERMS ON THE DIAGRAMS, EACH PAGE HAS BEEN DIVIDED INTO QUADRANTS AS SHOWN IN FIGURE.

QUADRANT 0	QUADRANT 1
QUADRANT 2	QUADRANT 3

REV.	AUTH.	DATE	REL.	APPROVED	CHK.	APPROVED
			RETOUCH			
	-			APPROVED	CHECKED	V.K. 1-11-62
					DRAWN	MAN 1-11-62
					SYSTEMS	CHKD 1-14-62

REFERENCE DRAWINGS

COMPONENTS (UNLESS OTHERWISE INDICATED)

	TOLERANCE	VALUE	SIZE
RESISTORS			
CAPACITORS			

TITLE: KEY TO SYMBOLS USED ON LOGICAL DIAGRAMS

CONTROL DATA CORPORATION

PROJECT OR PRODUCT: 1604-A

DRAWING NUMBER: XDP 214570 REV. A

PAGE 1

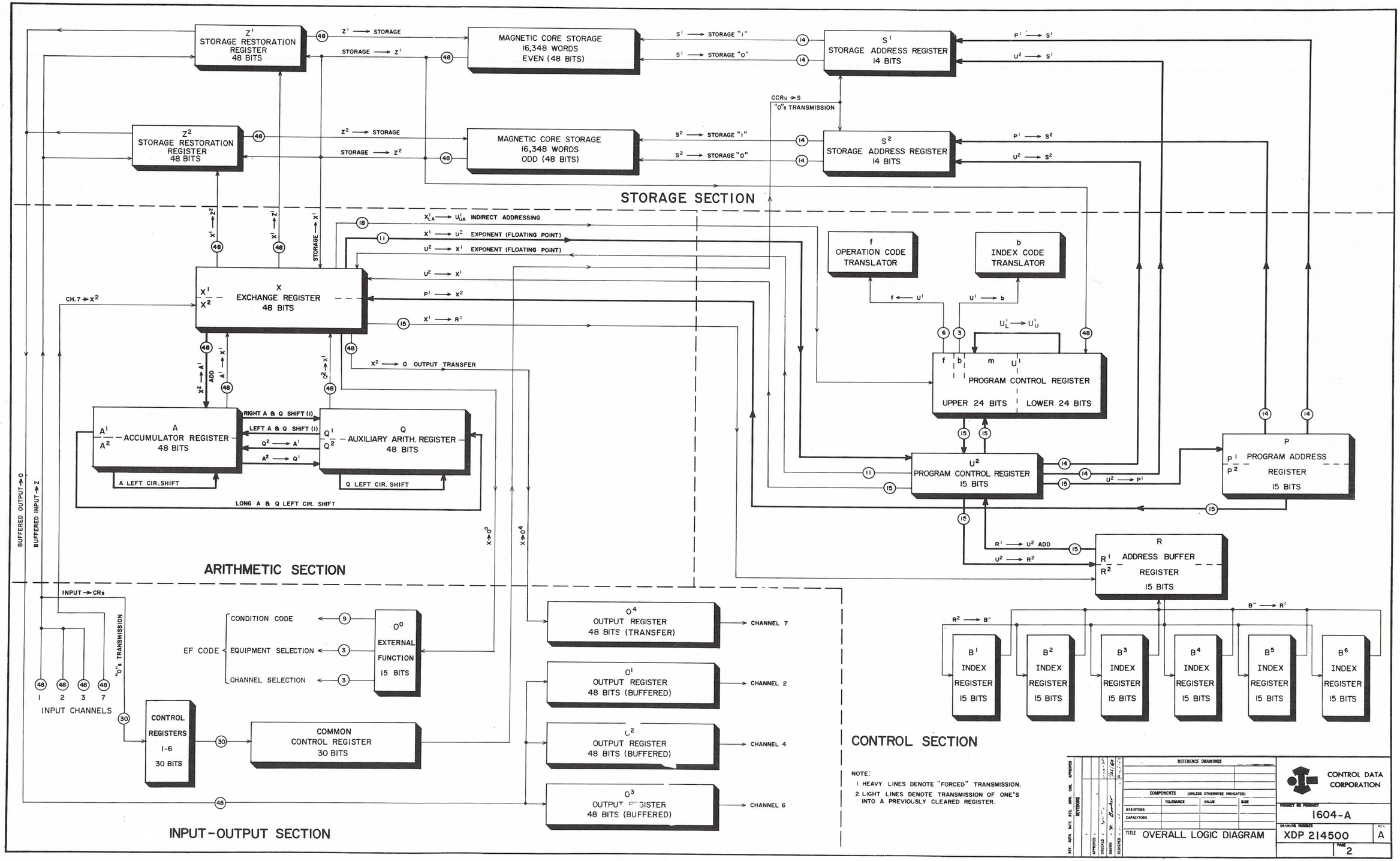
Z¹ STORAGE RESTORATION REGISTER 48 BITS
Z¹ → STORAGE
STORAGE → Z¹
MAGNETIC CORE STORAGE 16,348 WORDS EVEN (48 BITS)
S¹ → STORAGE "1"
S¹ → STORAGE "0"
S¹ STORAGE ADDRESS REGISTER 14 BITS
P¹ → S¹
U² → S¹
CCRu → S "0"s TRANSMISSION
Z² STORAGE RESTORATION REGISTER 48 BITS
Z² → STORAGE
STORAGE → Z²
MAGNETIC CORE STORAGE 16,348 WORDS ODD (48 BITS)
S² → STORAGE "1"
S² → STORAGE "0"
S² STORAGE ADDRESS REGISTER 14 BITS
P¹ → S²
U² → S²
STORAGE SECTION
X¹LA → U¹UA INDIRECT ADDRESSING
X¹ → U² EXPONENT (FLOATING POINT)
U² → X¹ EXPONENT (FLOATING POINT)
U² → X¹
P¹ → X²
X¹ → R¹
X EXCHANGE REGISTER 48 BITS
CH.7 → X²
X² → O OUTPUT TRANSFER
f OPERATION CODE TRANSLATOR
b INDEX CODE TRANSLATOR
f ← U¹
U¹ → b
U¹L → U¹U
PROGRAM CONTROL REGISTER
UPPER 24 BITS
LOWER 24 BITS
U² PROGRAM CONTROL REGISTER 15 BITS
U² → P¹
P PROGRAM ADDRESS REGISTER 15 BITS
R¹ → U² ADD
U² → R²
R ADDRESS BUFFER REGISTER 15 BITS
R² → B⁻
B⁻ → R¹
B¹ INDEX REGISTER 15 BITS
B² INDEX REGISTER 15 BITS
B³ INDEX REGISTER 15 BITS
B⁴ INDEX REGISTER 15 BITS
B⁵ INDEX REGISTER 15 BITS
B⁶ INDEX REGISTER 15 BITS
CONTROL SECTION
X² → A¹ ADD
C² → X¹
A ACCUMULATOR REGISTER 48 BITS
RIGHT A & Q SHIFT (1)
LEFT A & Q SHIFT (1)
Q² → A¹
A² → Q¹
Q AUXILIARY ARITH. REGISTER 48 BITS
A LEFT CIR. SHIFT
Q LEFT CIR. SHIFT
LONG A & Q LEFT CIR. SHIFT
X → O⁰
X → O⁴
ARITHMETIC SECTION
BUFFERED OUTPUT → O
BUFFERED INPUT → Z
INPUT → CRs
"0"s TRANSMISSION
EF CODE
CONDITION CODE
EQUIPMENT SELECTION
CHANNEL SELECTION
O⁰ EXTERNAL FUNCTION 15 BITS
INPUT CHANNELS 1 2 3 7
CONTROL REGISTERS 1-6 30 BITS
COMMON CONTROL REGISTER 30 BITS
O⁴ OUTPUT REGISTER 48 BITS (TRANSFER)
CHANNEL 7
O¹ OUTPUT REGISTER 48 BITS (BUFFERED)
CHANNEL 2
O² OUTPUT REGISTER 48 BITS (BUFFERED)
CHANNEL 4
O³ OUTPUT REGISTER 48 BITS (BUFFERED)
CHANNEL 6
INPUT-OUTPUT SECTION
NOTE:
1. HEAVY LINES DENOTE "FORCED" TRANSMISSION.
2. LIGHT LINES DENOTE TRANSMISSION OF ONE'S INTO A PREVIOUSLY CLEARED REGISTER.
REFERENCE DRAWINGS
COMPONENTS (UNLESS OTHERWISE INDICATED)
TOLERANCE
VALUE
SIZE
RESISTORS
CAPACITORS
CONTROL DATA CORPORATION
PRODUCT OR PROJECT 1604-A
DRAWING NUMBER XDP 214500
REV A
TITLE OVERALL LOGIC DIAGRAM
PAGE 2

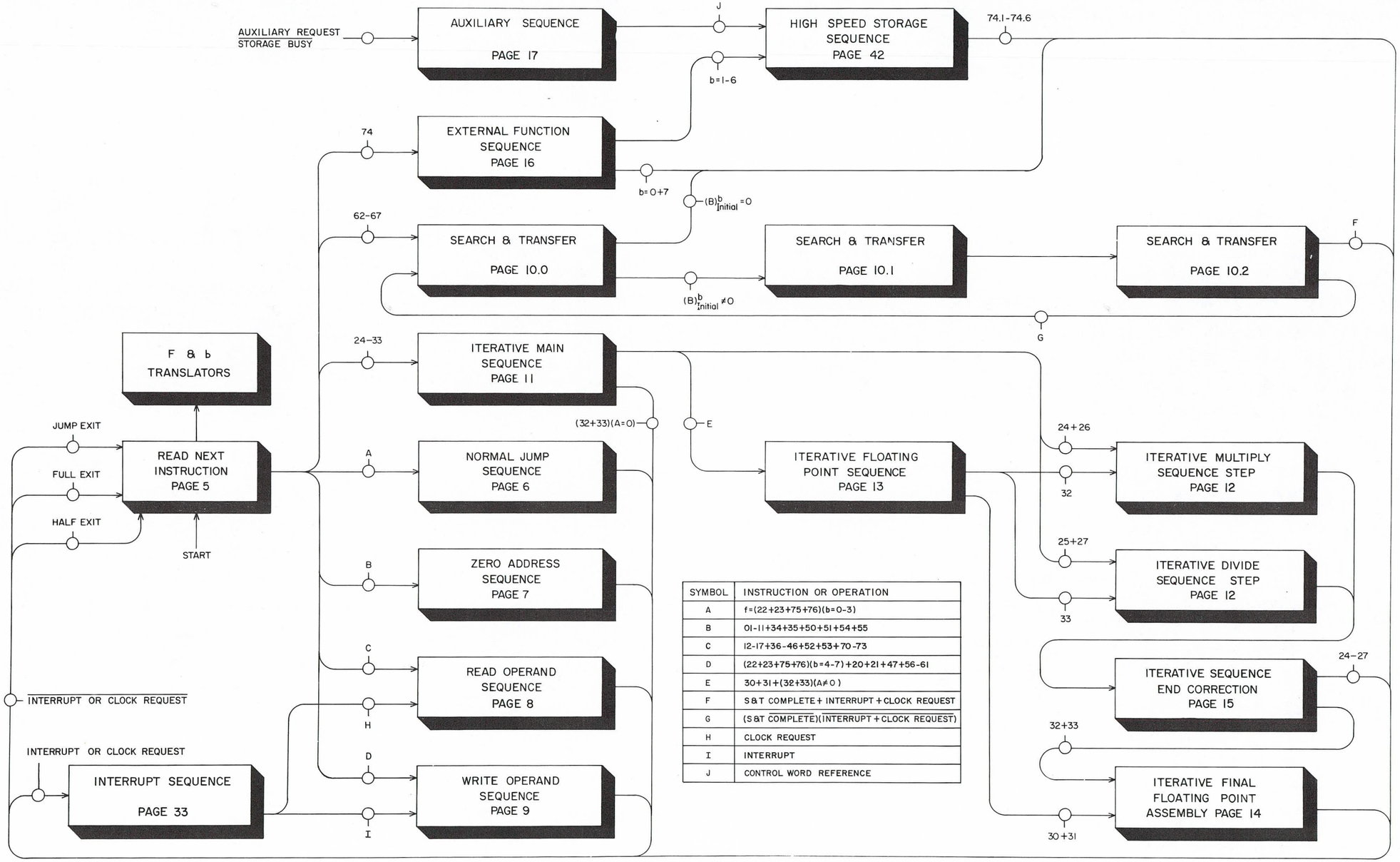

SYMBOL	INSTRUCTION OR OPERATION
A	f=(22+23+75+76)(b=0-3)
B	01-11+34+35+50+51+54+55
C	12-17+36-46+52+53+70-73
D	(22+23+75+76)(b=4-7)+20+21+47+56-61
E	30+31+(32+33)(A≠0)
F	S&T COMPLETE+ INTERRUPT+CLOCK REQUEST
G	(S&T $\overline{\text{COMPLETE}}$)($\overline{\text{INTERRUPT+CLOCK REQUEST}}$)
H	CLOCK REQUEST
I	INTERRUPT
J	CONTROL WORD REFERENCE

REV. AUTH. DATE REG. DRW. CHK. APPROVED
REVISIONS

APPROVED - 1-26-62
CHECKED - V.K. 1-26-62
DRAWN - I.MAN 9-27-61
DESIGNED - A.B.R.

REFERENCE DRAWINGS

COMPONENTS (UNLESS OTHERWISE INDICATED)

	TOLERANCE	VALUE	SIZE
RESISTORS			
CAPACITORS			

TITLE
SEQUENCE CONTROL CHART

CONTROL DATA CORPORATION

PROJECT OR PRODUCT
1604-A

DRAWING NUMBER
XDP 214591

REV

PAGE 3

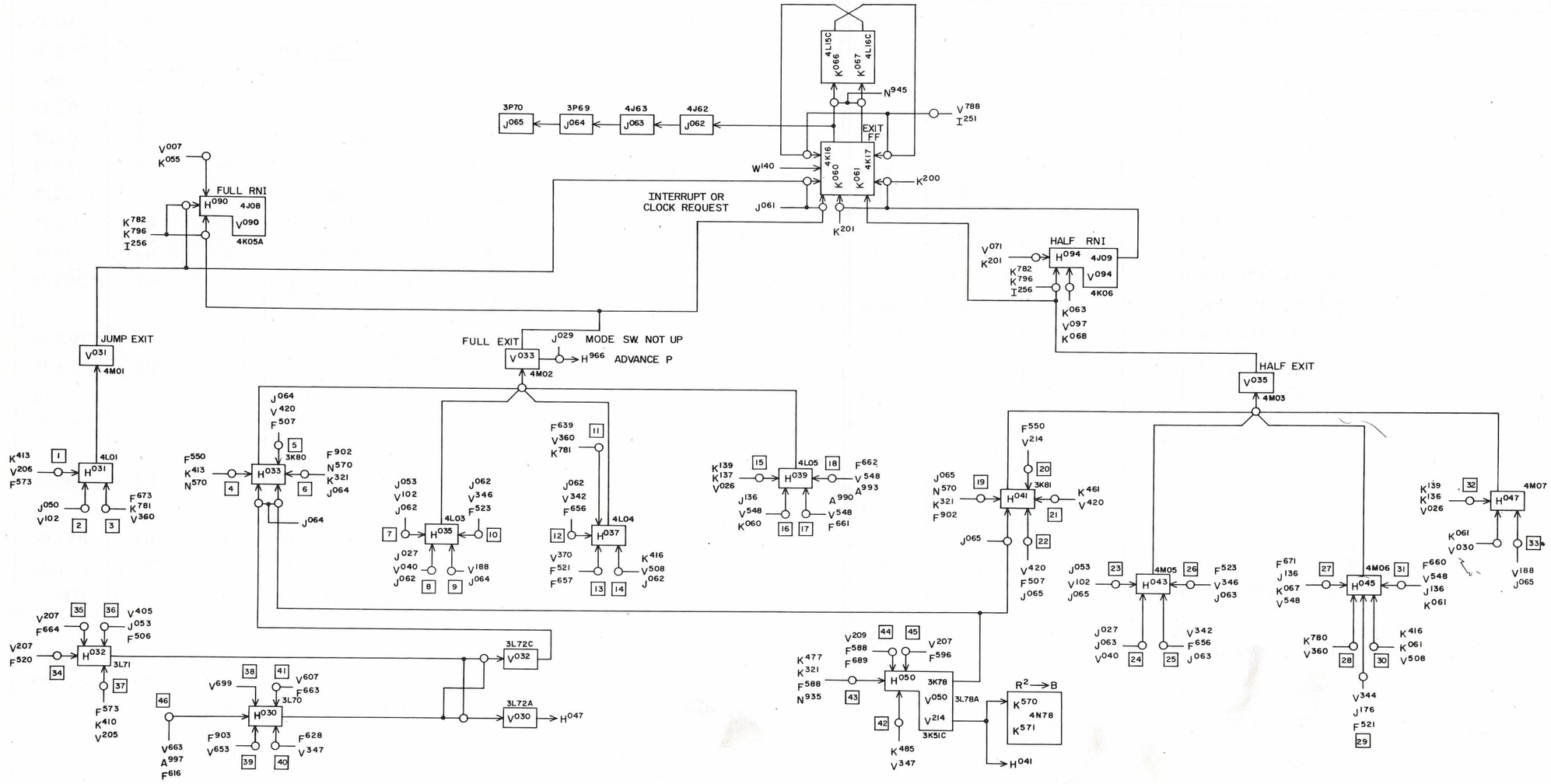

(1) ZA : 55(R=0)
(2) NJ : JUMP SATISFIED
(3) RO : INTERRUPT OR ADVANCE CLOCK
(4) ZA : 54 (R=0)
(5) WO : 20+21+47+56+57+60+61
(6) ZA : [01-03+05-07+34 $A_{47} \neq A_{46}$ A=0+35 $A_{47} \neq A_{46}$ AQ=0] R=0
(7) NJ : (22+23+75+76)(b=0-3)+NO JUMP
(8) RNI : STORAGE SWEEP
(9) HSS : 74.1-6
(10) RO : 43-46
(11) RO : [(37)(X NEG)+70-73] [ADV. CLOCK]
(12) RO : 12-17+40-42
(13) RO : 36(X NEG)
(14) ST : 62-67
(15) EXF : 74.0(EXIT FF=0)+74.7(POSITIVE RESPONSE)
(16) ST : (b≠0)(R=0)+(b=0)
(17) ST : (X>A)(65+67)
(18) ST : (64+66)(X=A)
(19) ZA : [01-03+05-07+34 $A_{47} \neq A_{46}$ A=0+35 $A_{47} \neq A_{46}$ AQ=0] R=0
(20) ZA : 04+10+11+54
(21) WO : (22+23+75+76)(b=4-7)
(22) WO : 20+21+47+56+57+60+61
(23) NJ : (22+23+75+76)(b=0-3)+NO JUMP
(24) RNI : STORAGE SWEEP
(25) RO : 12-17+40-42
(26) RO : 43-46
(27) ST : [(b≠0)(R=0)+(b=0)] [(64+66)(X=A)+(65+67)(X>A)] — SEARCH TERMINATED; SEARCH CONDITION NOT SATISFIED
(28) RO : 37(X POS)+70-73
(29) RO : (36)(X POS)
(30) ST : 62-67
(31) ST : (62+63)[(b≠0)(R=0)+(b=0)]
(32) EXF : 74.0(EXIT FF=1) 74.7(NEGATIVE RESPONSE)
(33) HSS : 74.1-6
(34) ZA : 04
(35) ZA : 10+11
(36) WO : NO JUMP+(b=4-7)(22+23+75-77)
(37) ZA : 55(R=0)
(38) I : FLOATING POINT OPERATION
(39) I : 24-27
(40) RO : 53
(41) I : (32+33)(A=0)
(42) RO : 52+53
(43) ZA : (34+35)($A_{45} \neq A_{46}$)
(44) ZA : 34($A_{47} \neq A_{46}$ + A=0)+(35)($A_{47} \neq A_{46}$ + AQ=0)
(45) ZA : 50+51
(46) I : (32)(X=A)

REV. AUTH. DATE REG. DRW. CHK. APPROVED
REVISIONS
APPROVED :
CHECKED : 3-8-60
DRAWN : R. MILLER 3-8-60
DESIGNED : 8-19-59

REFERENCE DRAWINGS

TITLE
LOGIC DIAGRAM
SEQUENCE EXITS

CONTROL DATA CORPORATION

PROJECT OR PRODUCT
1604-A

DRAWING NUMBER
XDP 214569

REV
E

PAGE
4

TERM	LOCATION	PAGE	QUAD.	DEFINITION
F107	6N08	19.1	0	f = 7X
F112	6M10B	19.1	0	f = 2X
F476	3M31C	19.3	3	$\overline{76}$
F519	4M25C	19.4	2	21
F553	3O83B	19.4	1	56 + 57
F554	4N04A	19.4	1	54 + 55 + 62 - 67
F639	4K72A	19.5	0	$\overline{00 + 77}$
F669	4M78B	8.0	3	$\overline{\text{RO Wait Storage I + (62) (ST Wait Storage)}}$
F673	4K72C	19.5	3	00 + 77
F682	4N83A	19.5	1	(Mode Switch Down) + (22 + 23 + 74 - 77) + (b ≠ 7)
F707	6J11C	19.6	1	b ≠ 7
F710	6J12B	19.6	0	76
F711	6J13A	19.6	0	b = 0 + b = 4 + (b = 1 + 5) (Stop Key 1)
F712	6J14B	19.6	2	(b = 2 + 6) (Stop Key 2) + (b = 3 + 7) (Stop Key 3)
F730	4K65A	19.6	0	b ≠ 0
F853	4J74A	19.6	1	56 + 57
H788	4056	33	0	Interrupt Seq.
I251	4N59C	33	3	Advance Clock
I256	6H82	32	1	$\overline{\text{External Interrupt}}$
I258	6K66A	30, 53	1	Internal Interrupt Request FF
I259	6K66C	30, 53	1	
J026	4J69C	28	3	$\overline{\text{Mode Switch Down}}$
J027	4J60	28	3	Mode Switch Down (Sweep Mode)
J061	4O02	33	0	Interrupt + Clock Request
J062	4J62	4	0	Exit FF Clear
J063	4J63	4	0	Exit FF Set
J064	3P69	4	0	Exit FF Clear
J065	3P70	4	0	Exit FF Set
J066	4N54	33	2	Interrupt
J067	4O29C	33	2	$\overline{\text{Interrupt}}$
J112	4L07	24	3	(P = 7 - 17) (Exit FF = 1)

TERM	LOCATION	PAGE	QUAD.	DEFINITION
K068	4P54A	9	2	Interrupt Exit FF
K206	3M71A	9	0	$\overline{\text{Write Operand Wait Storage}}$
K208	3O31A	11	0	$\overline{\text{Iterative Wait Storage}}$
K252	4N17A	17.0	2	$\overline{\text{Aux. Seq. Wait Storage}}$
K453	5O79C	18	1	$X^1_{LA} \rightarrow U^1_{UA}$
K600	4O68A	57	2	Initiate Storage FF
K602	5J64B	57	0	Initiate Storage FF
K610	3H12 B	57	0	Initiate Storage FF
K782	6O40A	33	3	$\overline{\text{Clock Request}}$
K796	6K83B	30, 53	1	$\overline{\text{Internal Interrupt}}$
L688	6N47A	33	1	Interrupt Lockout Light
N945	4J77C			Odd Clock Slave
N946	4P60B			Even Clock Slave
P520	1F06	35	0	Breakpoint
U437	6P23C	19	2	f = X2 + X3
U444	6P24	19	2	
U445	6P25	19	2	f = X4 + X5, + X 6
V005	4K02C	28	1	Manual Control
V042	4K04C	28	3	Manual Control
V071	4P53	54. 0-1	1	Storage Resume
V073	3H08	54.0-1	1	Storage Resume
V075	4I84	54. 0-1	1	Storage Resume
V402	3M56C	9	2	WO Seq.
V788	4O58	33	0	Interrupt Seq.
W140	4K76A	25	0	Internal M.C.
W141	4K76C	25	0	
W145	4K79	25	1	
W159	6L62	25	1	External M.C.
W781	4P14C	60	3	No Buffer Active

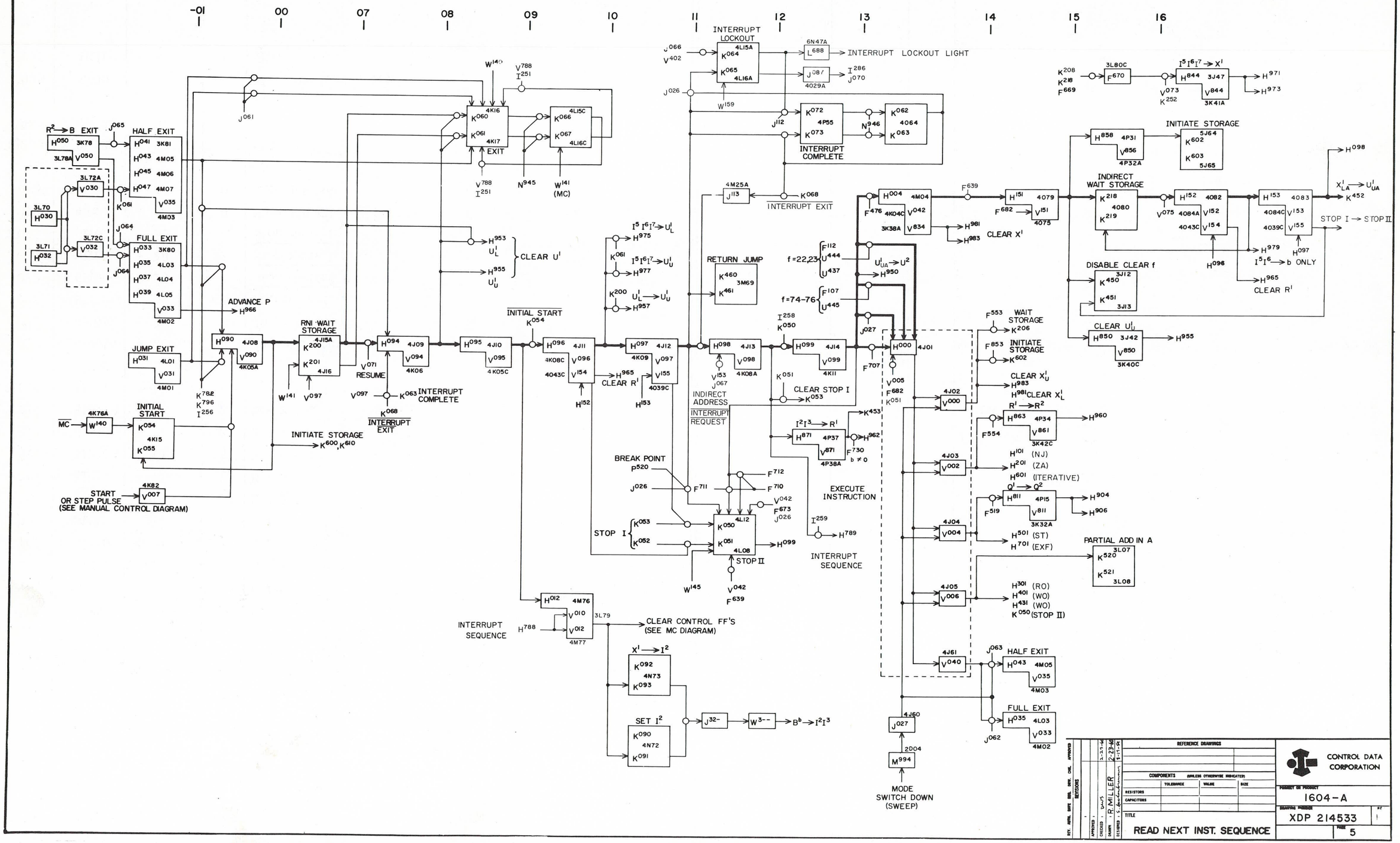

-01
00
07
08
09
10
11
12
13
14
15
16
INTERRUPT LOCKOUT
INTERRUPT LOCKOUT LIGHT
INTERRUPT COMPLETE
INTERRUPT EXIT
INITIATE STORAGE
INDIRECT WAIT STORAGE
STOP I → STOP II
DISABLE CLEAR f
CLEAR U'
CLEAR X'
CLEAR R'
RETURN JUMP
ADVANCE P
RNI WAIT STORAGE
RESUME
INTERRUPT COMPLETE
INTERRUPT EXIT
INITIAL START
INITIATE STORAGE
START OR STEP PULSE (SEE MANUAL CONTROL DIAGRAM)
INDIRECT ADDRESS
INTERRUPT REQUEST
CLEAR STOP I
WAIT STORAGE
INITIATE STORAGE
CLEAR X'U
CLEAR X'L
BREAK POINT
STOP I
STOP II
EXECUTE INSTRUCTION
INTERRUPT SEQUENCE
PARTIAL ADD IN A
(NJ)
(ZA)
(ITERATIVE)
(ST)
(EXF)
(RO)
(WO)
(WO)
(STOP II)
CLEAR CONTROL FF'S (SEE MC DIAGRAM)
SET I²
HALF EXIT
FULL EXIT
MODE SWITCH DOWN (SWEEP)
REFERENCE DRAWINGS
COMPONENTS (UNLESS OTHERWISE INDICATED)
TOLERANCE
VALUE
SIZE
RESISTORS
CAPACITORS
TITLE
READ NEXT INST. SEQUENCE
CONTROL DATA CORPORATION
PROJECT OR PRODUCT
1604-A
DRAWING NUMBER
XDP 214533
PAGE
5

TERM	LOCATION	PAGE	QUAD.	DEFINITION
A986	6J13C	52	0	A ≠ 0
A987	6J08C	52	0	A = 0
F501	3L81A	19.4	0	(22 + 23 + 75 + 76) (b = 0 - 3)
F516	6H13B	19.4	2	23
F528	6H09A	19.4	0	22
F582	3M83C	19.4	1	76
F675	6H04C	19.5	1	75
F700	6J15	19	3	b ≠ 0
F701	5O11	19	3	b ≠ 1
F702	5P25	19	3	b ≠ 2
F703	5O10	19	3	b ≠ 3
F704	5P21	19	1	b ≠ 4
F705	5O09	19	1	b ≠ 5
F706	5P20	19	1	b ≠ 6
F912	6H06A	19	3	b = 0 + 4
F913	6H06C	19	3	b = 1 + 5
F914	6H07A	19	3	b = 2 + 6
F915	6H07C	19	1	b = 3 + 7
J020	6H01A	28	2	Jump Switch 1
J021	6H01C	28	2	Jump Switch 2
J022	6H02A	28	2	Jump Switch 3
J023	6H02C	28	2	$\overline{\text{Stop Switch 1}}$
J024	6H03A	28	2	$\overline{\text{Stop Switch 2}}$
J025	6H03C	28	2	$\overline{\text{Stop Switch 3}}$
J062	4J62	4	0	Exit FF Clear
J065	3P70	4	0	Exit FF Set
Q986	6H12A	52	2	Q ≠ 0
Q987	6H12C	52	2	Q = 0
V002	4J03	5	3	Execute Instruction
V099	4K11	5	1	RNI

TERM	LOCATION	PAGE	QUAD.	DEFINITION
W771	6L28C	52	1	A Neg.
W772	6L29A	52	1	Q Pos.
W773	6L27C	52	1	Q Neg.

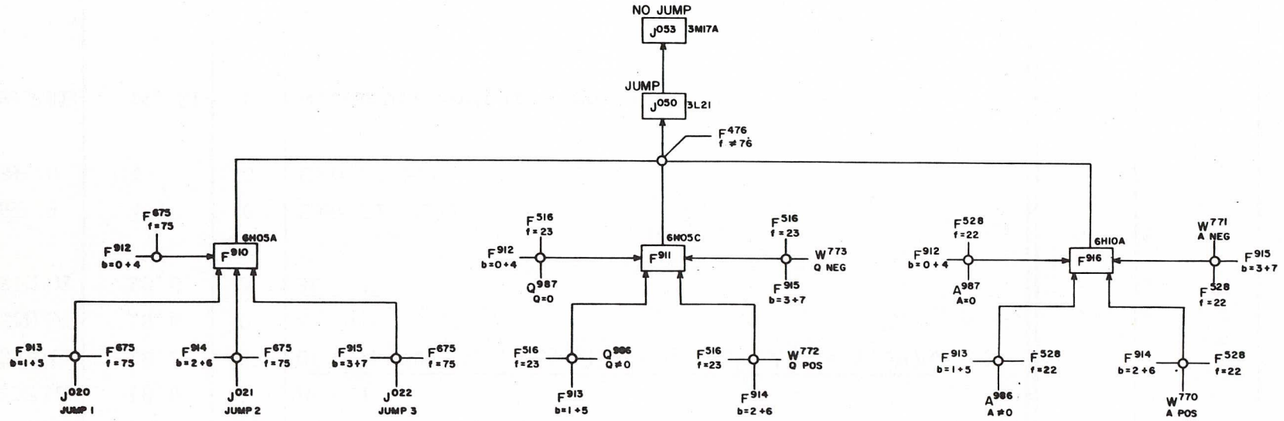

SENSING JUMP CONDITION

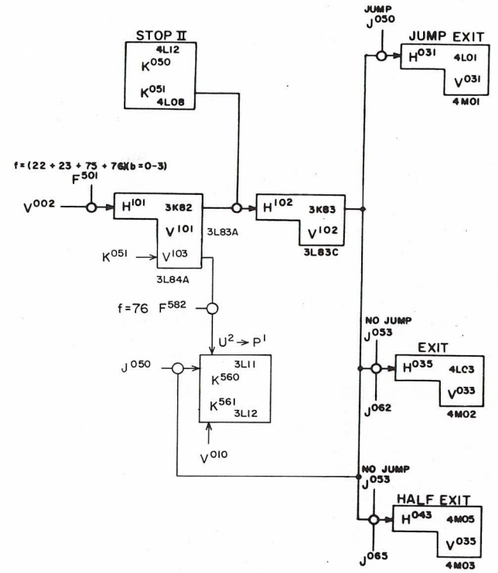

NORMAL JUMP SEQUENCE

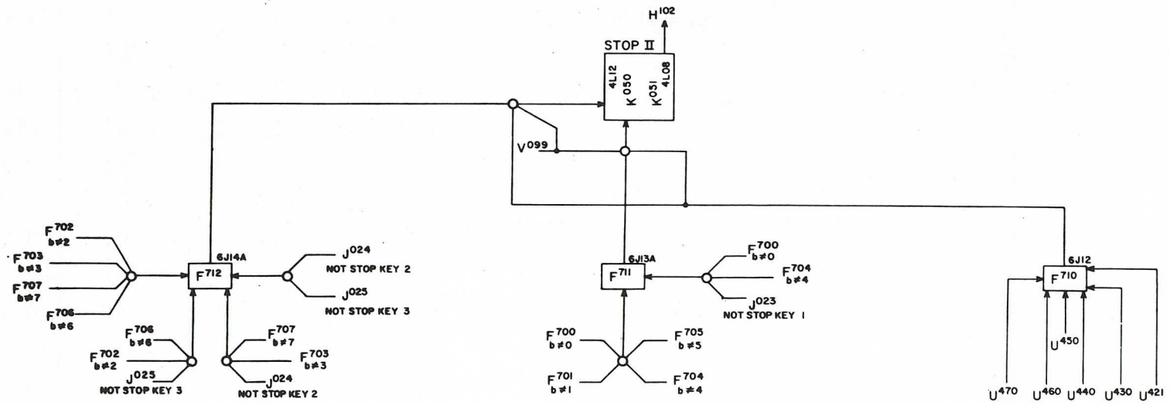

SENSING SELECTIVE STOP CONDITION

REFERENCE DRAWINGS

COMPONENTS (UNLESS OTHERWISE INDICATED)

	TOLERANCE	VALUE	SIZE
RESISTORS			
CAPACITORS			

REVISIONS

DRAWN E.A. BUTENHOFF 2-25-60

TITLE LOGIC DIAGRAM NORMAL JUMP SEQ., SENSING JUMP & SELECTIVE STOPS

CONTROL DATA CORPORATION

1604-A

XDP 214561 REV A

PAGE 6

TERM	LOCATION	PAGE	QUAD.	DEFINITION
F404	3M20B	19.3	0	$\overline{04}$
F410	3M26C	19.3	0	$\overline{10}$
F455	3M28A	19.3	1	$\overline{55}$
F500	3L82A	19.4	0	01 - 07 + 10 + 11 + 34 + 35 + 50 + 51 + 54 + 55
F520	3M78A	19.4	2	04
F527	3N84A	19.4	0	04 + 10 + 11
F549	3M71C	19.4	1	$\overline{34 + 35 + 50 + 55}$
F550	3N79B	19.4	1	54
F554	4N04A	19.4	1	54 + 55 + 62 - 67
F571	3O78C	19.4	1	01 - 07 + 34 + 35
F573	3O77B	19.4	1	55
F585	3J56A	19.4	3	01 + 03 + 30 + 31
F586	3J56C	19.4	3	02 + 03 + 30 +31
F588	3J54A	19.4	3	34 + 35
F589	3J54C	19.4	3	(01 - 07) + (34 $A_{47} = A_{46}$ A $\neq$ 0) + (35 $A_{47} = A_{46}$ AQ $\neq$ 0)
F594	3K55C	19.4	3	34 + 35 + 50 + 51 + 54 + 55
F596	3P16C	19.4	3	50 + 51
F615	3O84B	19.5	0	01 - 07 + 34 + 35 + 50 + 51 + 54
F618	3K28A	19.5	0	04 + 10
F636	3K26A	19.5	0	05 + 07 + 34 + 35
F652	3M39A	19.5	1	06 + 07 + 35
F664	3N13C	19.5	1	10 + 11
F689	3J01C	19.5	3	$\overline{01 - 07 + (34)(A_{47} = A_{46})(A \neq 0) + (35)(A_{47} = A_{46})(AQ \neq 0)}$
F731	3N12A	19.6	0	b $\neq$ 0
F902	3P16A	19.6	3	$\overline{30 - 33}$
J064	3P69	4	0	Exit FF Clear
J065	3P70	4	0	Exit FF Set
K318	3L26B	14, 51	1	Normalize Shift Exit Control

TERM	LOCATION	PAGE	QUAD.	DEFINITION
N570	5L62	21.0	2	R = 0
N670	5O61	21.0	2	R = 0 + 1
N931	3J76C			Odd Clock Slave
N933	3L20C			Odd Clock Slave
N935	3O49C			Odd Clock Slave
N991	3M09C			Odd Clock Slave
U704	6L49	53	2	(01-03 + 05-07) (Shift Count $>127_{10}$)

00 01 02 03 04 05 06 07 08 09 10 11 12 13 14

EXECUTE INSTRUCTION V002

H201 3J58 V201 3K58 — F500

H202 3J59 V202 3K59A

H203 3J60 V203 3K60

H204 3J61 V204 3K59C

H205 3J62 V205 3K61

H206 3J63 V206 3K62

H207 3J64 V207 3K63

H208 3J65 V208 3K65C

H209 3J68 V209 3K64

H210 3J69 V210 3K65A

H211 3J70 V211 3K68

H212 3J71 V212 3K69A

H213 3J72 V213 3K70

H214 3K52 V214 3K51C

PARTIAL ADD IN U — K530 3L09, K531 3L10 — F550

PARTIAL ADD IN A — K520 3L07, K521 3L08 — F404, F410

A² → Q¹ — H814 3J25 V814 3K31C — F520 — H915, H917

R¹ → R² — H863 4P34 V861 3K42C — F554 — H960

COMP R² → R¹ — H862 3J45 V862 3K45A — F550 — H963

CLEAR A¹ — K580 3L13, K581 3L14 — F618

R ≠ O — K410 3K71, K411 3K72 — F573

ADD R¹ → U² — H952 5N61 N-52 — F549, F731

U² → R² — H964 5K71 N-64 — F404, F615

U² → X¹ WITH EXT. — H898 3L15 V892 3L16A — F527 — H941, H943, W910

U² → P¹ — K560 3L11, K561 3L12 — F573, K411

CLEAR B — K550 4N76, K551 4N77 — F594

X¹ → X² — H821 3J28 V821 3K32C — H930, H932

R² → R¹ — H961 5N66 N-61 — F571

R ≠ O — K410 3K71, K411 3K72 — F455, F550 — N570 R=0

K414 3L25, K415 — N991

K412 3K74C, K413 3K73B — N931

R=0 N570 FULL EXIT — H033 3K80 V033 4M02 — F550

JUMP EXIT — H031 4L01 V031 4M01 — F573, K413

F=04 — K470 3K74A, K471 3K75 — F520

F=04,10,11 — K472 3L75, K473 3K77A — F527

R² → B EXIT — H050 3K78 V050 3L78A V214 3K51C — F596

HALF EXIT — H032 3L71 V030 3L72A V032 3L72C — F520, F573, K410 — H047

FULL EXIT — H033

REDUCE R¹ → R² — H970 5071 N-70 — F573

INITIATE SHIFT — H220 3J75 V220 3K76A V222 — F404, F589, K77C

SCALE TERMINATE — K476 3M32, K477 3M33

SHIFT FAULT — K234 6L51 K235 — U704

HALF EXIT — H032 3L71 V030 3L72A V032 3L72C — F664 — H047

FULL EXIT — H033

HALF EXIT — H041 3K81 V035 4M03 — J065

A RIGHT — K310 3L31, K311 — F585, K321, N670

Q RIGHT — K312 3L30, K313 — F586, K321, N670

A LEFT — K314 3L29, K315 3L28 — F636, K321, K318, N670

Q LEFT — K316 3L32B, K317 3L27 — F652, K318, K321, N670

H221 3J73 V221 3K76C — V594

N933 REDUCE R¹ → R² — H974 3J52 N-70 — K317, N991, K476

SHIFT EXIT CONTROL — K320 3M10, K321 3M11

R=0 N570 FULL EXIT — H033 3K80 V033 4M02 — F902, J064

V223 3K69C

R=0 N570 HALF EXIT — H041 3K81 V035 4M03 — F902, J065

R² → B EXIT — H050 3K78 V050 3L78A V214 3K51C — F588, K477, N935

R² → B^b — K570 4N78, K571 4N80

HALF EXIT — H041 3K81 V035 4M03 — F550

REDUCE R¹ → R² — H970 5071 N-70 — K472

Q¹ → Q² — H815 3J26 V811 3K32A — K471

COMP R² → R¹ — H862 3J45 V862 3K45A — H963

ADD X² → A¹ — H826 3J32 V820 3K33A — K473 — H921, H923

A² → Q¹ — H814 3J25 V814 3K31C — H915, H917

Q² → A¹ — H810 3J23 V810 3K31A — H911, H913

R¹ → R² — H960 — K472

H904, H906

REV.	AUTH.	DATE	STD.	DRWG.	CHK.	APPROVED
REVISIONS						
						APPROVED
						CHECKED
						DRAWN
						DESIGNED

APPROVED: 2-24-60
CHECKED: [illegible]
DRAWN: E.A. BUTENHOFF 2-23-60
DESIGNED: [illegible] 8-11-54

REFERENCE DRAWINGS

CONTROL DATA CORPORATION

PROJECT OR PRODUCT: 1604-A

TITLE: LOGIC DIAGRAM ZERO ADDRESS SEQUENCE

DRAWING NUMBER: XDP 214584 REV. E

PAGE 7

TERM	LOCATION	PAGE	QUAD.	DEFINITION
F351	6K06C	19.2	1	$\overline{52 + 53}$
F472	4L72C	19.3	1	$\overline{72}$
F502	4M09A	19.4	0	12 - 17 + 36 + 37 + 40 - 46 + 52 + 53 + 70 - 73
F503	4M09C	19.4	0	52 + 53
F522	4M11A	19.4	2	16 + 17 + 37
F529	4M12C	19.4	0	72 + Adv. Clock
F530	4M13A	19.4	0	12 + 14 + 16 + 37 + 40 + 42 + 70 - 73 + Adv. Clock
F542	4M16A	19.4	2	41 + 43 + 71 + 73
F543	4N01B	19.4	2	43
F544	4M16C	19.4	2	13 + 15 + 17 + 41
F562	4N06A	19.4	3	41 + 43 + 71
F563	4N06C	19.4	3	72 + 73 + Adv. Clock
F566	4N07A	19.4	3	40 + 41
F576	4O04A	19.4	1	43 + 72 + 73 + Adv. Clock
F614	4K69A	19.5	0	37 + 43 - 46
F619	4K69C	19.5	0	12 + 13 + 16 + 17 + 37 + 44 + 72 + 73 + Adv. Clock
F730	4K65A	19.6	0	b ≠ 0
I250	4N59A	33	3	Adv. Clock FF
I251	4N59C	33	3	
I284	4N58	33	2	Adv. Clock
K208	3031A	11	0	$\overline{\text{Iterative Wait Storage}}$
K218	4O80A	5	1	$\overline{\text{Indirect Address Wait Storage}}$
K252	4N17A	17.0	2	$\overline{\text{Aux. Seq. Wait Storage}}$
V006	4J05	5	3	Execute Instruction
V073	3H08	54.0,.1	1	Storage Resume
V075	4I84	54.0, .1	1	Storage Resume
V788	4O58	33	0	Interrupt Sequence

TERM	LOCATION	PAGE	QUAD.	DEFINITION

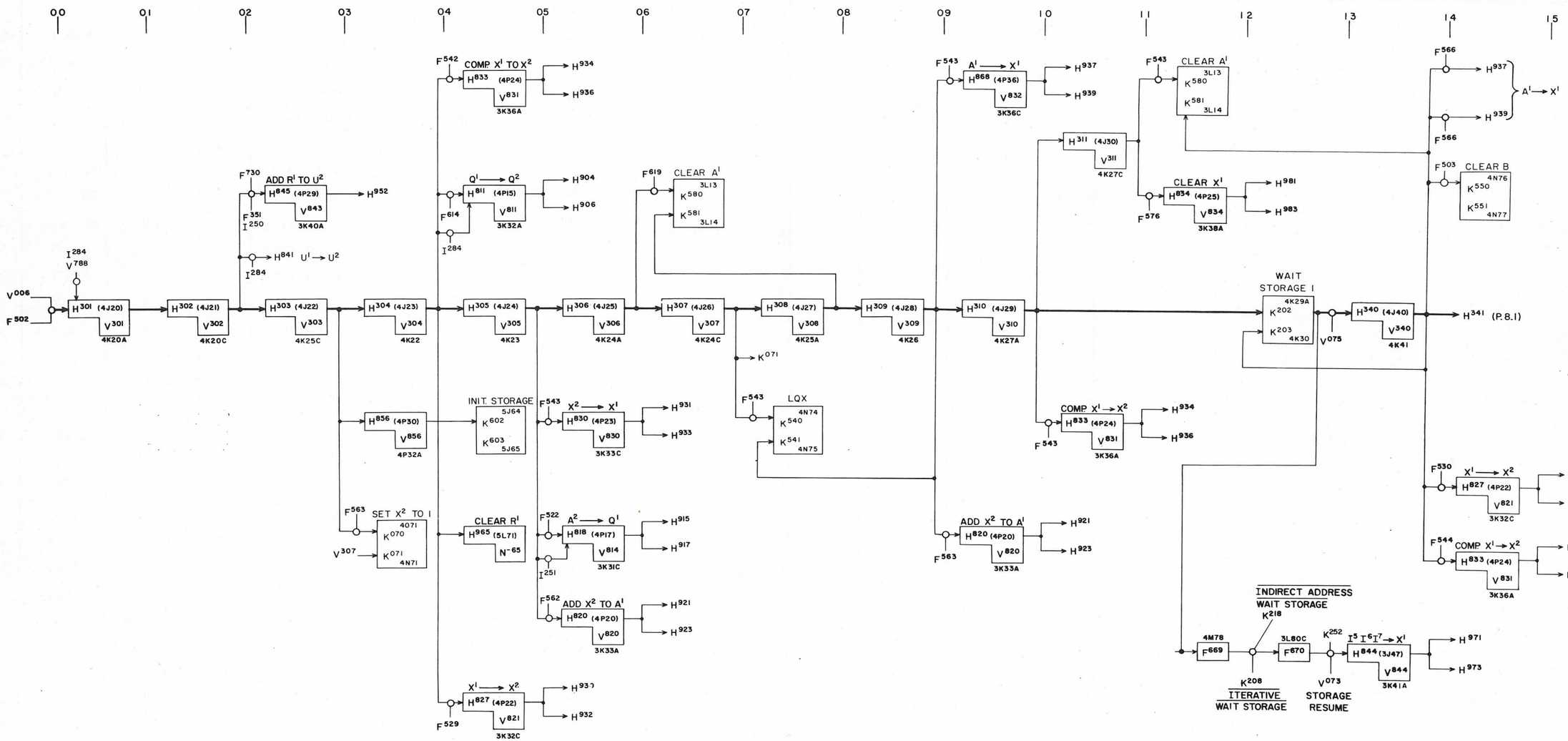

REV.	AUTH.	DATE	REQ.	DRW.	CHK.	APPROVED
REVISIONS						
-						
APPROVED -						
CHECKED - D.W.S.						1-15-60
DRAWN - E.A.B.						1-15-60
DESIGNED - S.E.A.						9-24-59

REFERENCE DRAWINGS

COMPONENTS (UNLESS OTHERWISE INDICATED)

	TOLERANCE	VALUE	SIZE
RESISTORS			
CAPACITORS			

TITLE

READ OPERAND SEQUENCE

CONTROL DATA CORPORATION

PRODUCT OR PRODUCT

1604-A

DRAWING NUMBER

XDP 214525

REV. C

PAGE

8.0

TERM	LOCATION	PAGE	QUAD.	DEFINITION
F436	4K73A	19.3	0	$\overline{36}$
F437	4L68B	19.3	0	$\overline{37}$
F443	4L69B	19.3	2	$\overline{43}$
F444	4L70A	19.3	2	$\overline{44}$
F503	4M09C	19.4	0	52 + 53
F521	4M17A	19.4	2	36
F523	4M11C	19.4	2	43 - 46
F524	4M12A	19.4	2	16 + 17
F531	4M13C	19.4	0	43 - 45
F543	4N01	19.4	2	43
F545	4N02A	19.4	1	46
F559	4N05B	19.4	3	37
F566	4N07A	19.4	3	40 + 41
F567	4O27A	19.4	3	37
F597	4O05A	19.4	3	37 + 70 - 73 + Adv. Clock
F613	3M77A	19.5	0	24 - 27 + 30 - 33
F628	4K70A	19.5	0	53
F656	4K65C	19.5	1	12 - 17 + 40 - 42
F657	4M17C	19.5	1	X Neg.
F672	4K64A	19.5	3	$\overline{12 + 13 + 16 + 17 + 37 + 40 - 42}$
F673	4K72C	19.5	3	00 + 77
JO62	4J62	4	0	Exit FF Clear
J063	4J63	4	0	Exit FF Set
J064	3P69	4	0	Exit FF Clear
J065	3P70	4	0	Exit FF Set
J176	3N03A	52	1	X Pos.
J177	6J84C	53	1	Overflow Fault
J579	6L52A	30	1	$\overline{\text{Select 0XX70}}$
K695	4N69C	33	0	Interrupt or Clock Request FF
K755	6O64A	60	3	Clock Wait FF
K783	6O40C	33	3	Clock Request
K883	4N81C	33	3	Clock Request Slave

TERM	LOCATION	PAGE	QUAD.	DEFINITION
V075	4I84	54.0, .1	1	Storage Resume
V340	4K41	8.0	1	R. O. Sequence
V886	3K48	51	0	Shift Control
W142	4K77	25	0	Internal M.C.
W145	4K79	25	1	Internal M.C.
W156	5K39	25	2	Internal M.C.
W158	3J02	25	3	Internal M.C.
W184	6O77	25	2	Internal M.C.

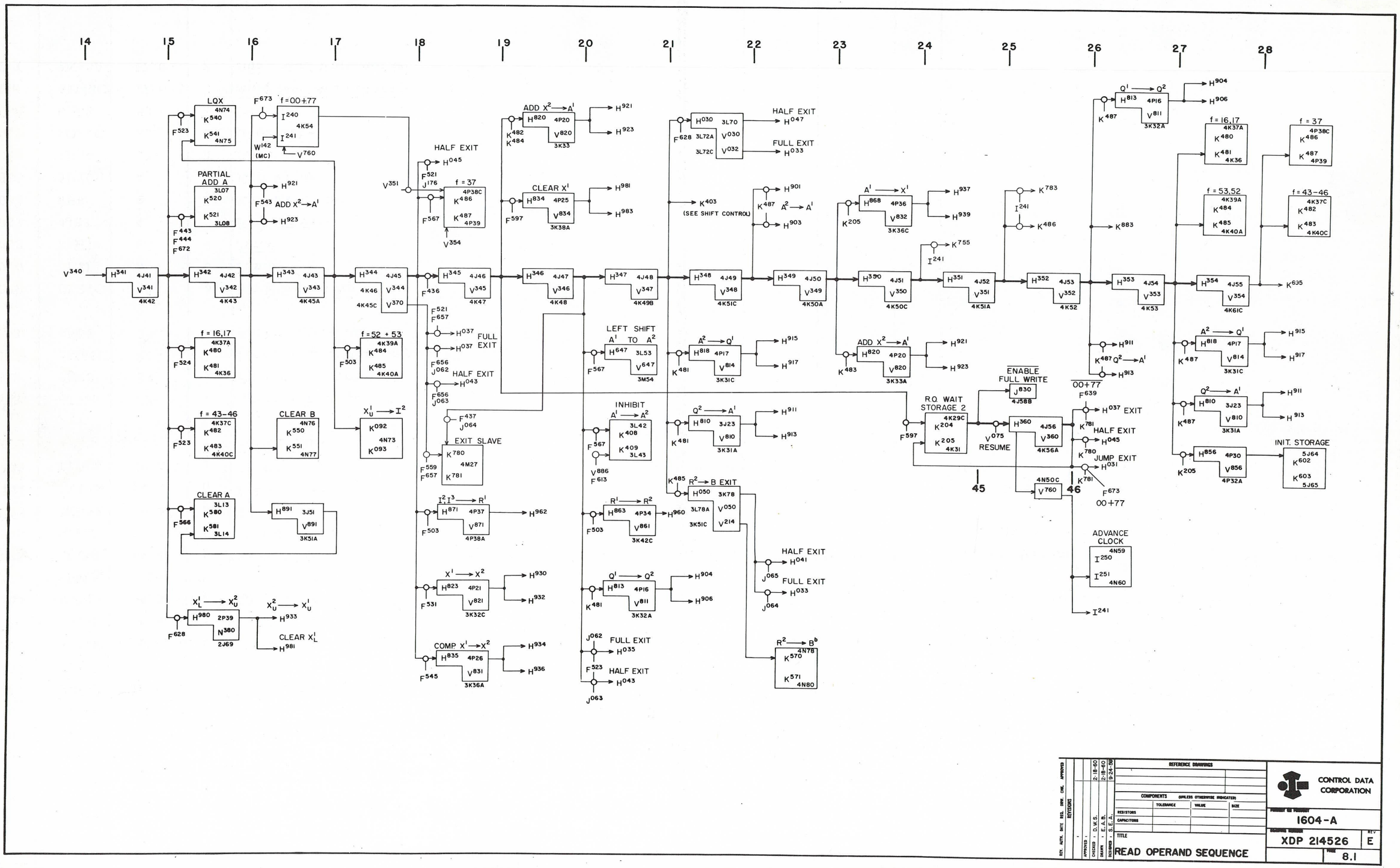

REV.	AUTH.	DATE	REQ.	DWN.	CHK.	APPROVED

REVISIONS

APPROVED :
CHECKED : D.W.S. 2-18-60
DRAWN : E.A.B. 2-18-60
DESIGNED : S.E.A. 9-24-59

REFERENCE DRAWINGS

COMPONENTS (UNLESS OTHERWISE INDICATED)

	TOLERANCE	VALUE	SIZE
RESISTORS			
CAPACITORS			

TITLE
READ OPERAND SEQUENCE

CONTROL DATA CORPORATION

PROJECT OR PRODUCT
1604-A

DRAWING NUMBER
XDP 214526

REV
E

PAGE
8.1

TERM	LOCATION	PAGE	QUAD.	DEFINITION
F456	3M29A	19.3	1	$\overline{56}$
F460	3M30A	19.3	3	$\overline{60}$
F505	3L82C	19.4	0	20 + 21 + 47 + 60 + 61
F506	3M84A	19.4	0	(b = 4 - 7) (22 + 23 + 75 -77)
F507	3M84C	19.4	0	20 + 21 + 47 + 56 + 57 + 60 + 61
F515	3M81C	19.4	2	21 + 47
F527	3N84A	19.4	0	04 + 10 + 11
F553	3O83B	19.4	1	56 + 57
F557	3O81B	19.4	1	22 + 23 + 75 + 76
F560	3O80B	19.4	3	21
F569	3O78A	19.4	1	20 + 21 + 47 + 60 + 61
F577	4J64A	19.4	1	20 + 21 + 47
F578	4J32A	19.4	1	57 + 61
F579	4J32C	19.4	1	57 + 61
F593	3K55A	19.4	3	47
F731	3N12A	19.6	0	b ≠ 0
F853	4J74A	19.6	1	56 + 57
H071	4H83	54.0, .1	1	$\overline{\text{Storage Resume}}$
I253	6J02	33	2	Internal Interrupt FF
I255	6N83	33	2	External Interrupt FF
I257	6M66C	32	1	External Interrupt Request FF
I283	4N58	33	2	External Interrupt
J029	6L37C	28	3	Mode Switch $\overline{\text{Up}}$
J050	3L21	6	0	Jump
J053	3M17A	6	0	$\overline{\text{Jump}}$
J063	4J63	4	0	Exit FF Set
J064	3P69	4	0	Exit FF Clear
J065	3P70	4	0	Exit FF Set
J066	4N54	33	2	Interrupt
J067	4O29C	33	2	$\overline{\text{Interrupt}}$
J068	6H83	33	2	Interrupt
J138	4M43C	17.0	2	$\overline{\text{Aux. Seq. Wait Storage}}$
J139	4N43A	17.0	2	Aux. Seq. Wait Storage

TERM	LOCATION	PAGE	QUAD.	DEFINITION
K050	4L12B	28, 5	1	$\overline{\text{Stop II}}$
K066	4L15C	5	0	Exit FF Clear
K252	4N17A	17.0	2	$\overline{\text{Aux. Seq. Wait Storage}}$
K622	3H01B	54.0	2	$\overline{\text{Even Storage Busy}}$
K662	4I76B	54.1	2	$\overline{\text{Odd Storage Busy}}$
K695	4N69	33	0	Interrupt + Clock Request
K797	6K84	30	1	Internal Interrupt Request
K396	3I77A	57	0	Odd Clock Slave
K496	4H84A	57	0	Odd Clock Slave
V000	4J02	5	1	Execute Instruction
V006	4J05	5	3	Execute Instruction
V073	3H08	54.0, .1	1	Storage Resume
V788	4O58	33	0	Interrupt Sequence
W148	3J07A	25	2	Internal M.C.
W910	3M65A	19	2	U^2 Neg.

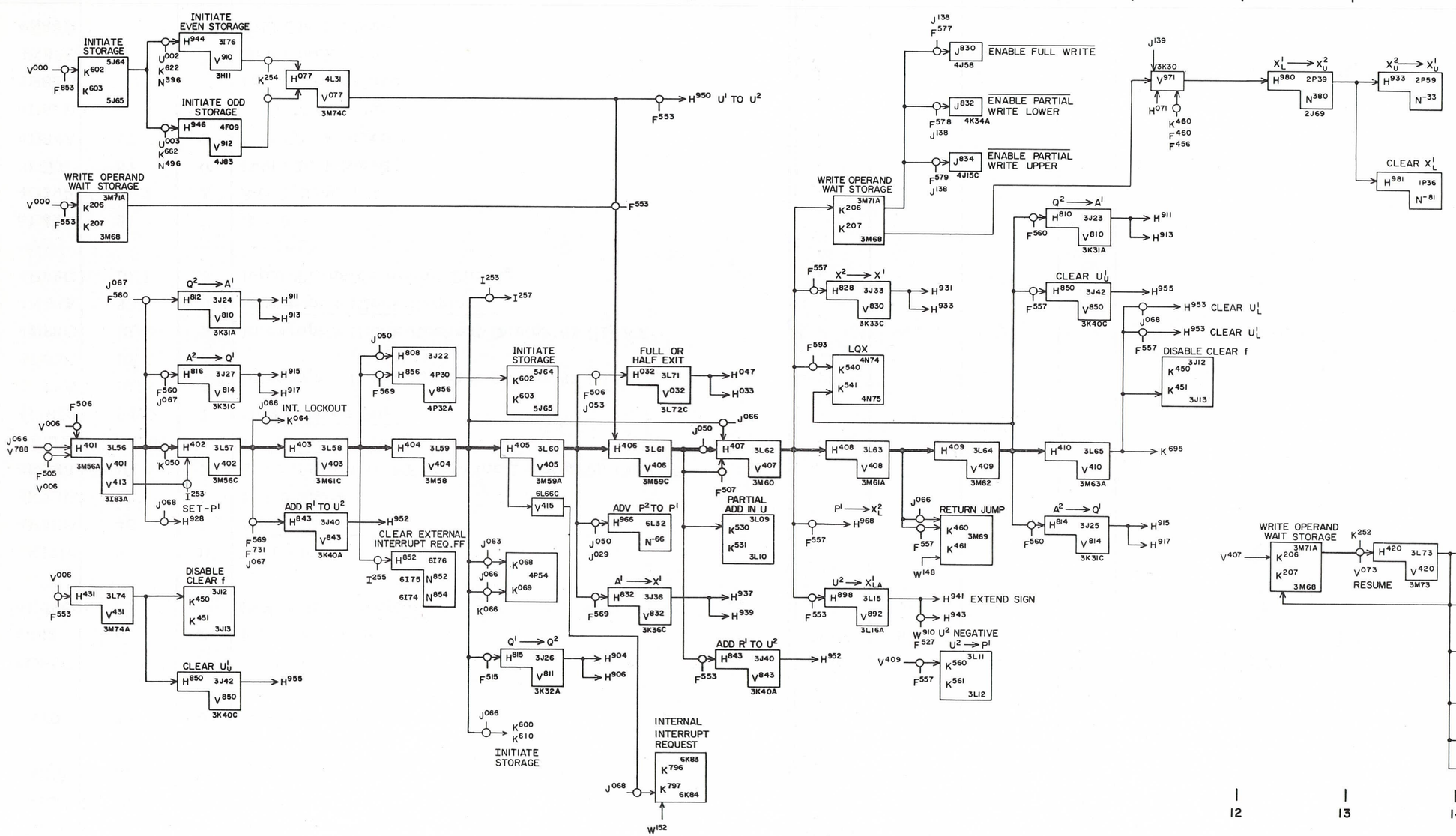

REV.	AUTH.	DATE	REQ.	DRW.	CHK.	APPROVED
REVISIONS						

TERM	LOCATION	PAGE	QUAD.	DEFINITION
F462	4K74A	19.3	3	$\overline{62}$
F463	4K73C	19.3	1	$\overline{63}$
F509	4N16C	19.4	0	62 - 67
F533	4M14B	19.4	1	63
F575	4N07C	19.4	1	62
F730	4K65A	19.6	0	b ≠ 0
F731	3N12A	19.6	0	b ≠ 0
H789	4N70	33	0	Interrupt Sequence
J060	4O05C			b = 0
J062	4J62	4	0	Exit FF Clear
J135	4K39C			(b ≠ 0) (ST $\overline{\text{Complete}}$)
K061	4K17B	5	0	Exit FF
K254	4P28B	45	1	$\overline{\text{Aux. Request}}$
K413	3K73B	21	0	R ≠ 0 Slave
K432	4K32A	10.2	2	Transfer Active FF for Line Printer on Chnl. 7
K622	3H01B	54.0	2	$\overline{\text{Even Storage Busy}}$
K662	4I76B	54.1	2	$\overline{\text{Odd Storage Busy}}$
K690	4L63A	10.2	3	Interrupt + Clock Request During 63 (I) FF
K691	4L63C	10.2	3	
K693	4N68C	10.2	3	Interrupt + Clock Request During 63 (II) FF
K694	4N69A	33	0	$\overline{\text{Interrupt + Clock Request}}$
K837	4P69C	10.1	3	Input Transfer Ready Timing
N570	5L62	21	2	R = 0
N880	4O39A	10.2	3	S & T Sequence
N396	3I77A	57	0	Odd Clock Slave
N496	4H84A	57	0	Odd Clock Slave
N946	4P60B			Even Clock Slave
N948	4N82B			Even Clock Slave
N949	4N83C			Odd Clock Slave
N951	4N84B			Odd Clock Slave
U002	5J04	18	2	Lowest Bit of U^2
U003	5J05	18	2	
V004	4J04	5	3	Execute Instruction
V542	4M47A	10.1	3	ST Sequence
V544	4M48C	10.2	0	
V550	4M57C	10.2	1	
V789	4M79A	33	0	Interrupt Seq.
V790	4M79C	33	0	
W142	4K77	25	0	Internal M.C.
W152	6L60C	25	3	Internal + External M.C.

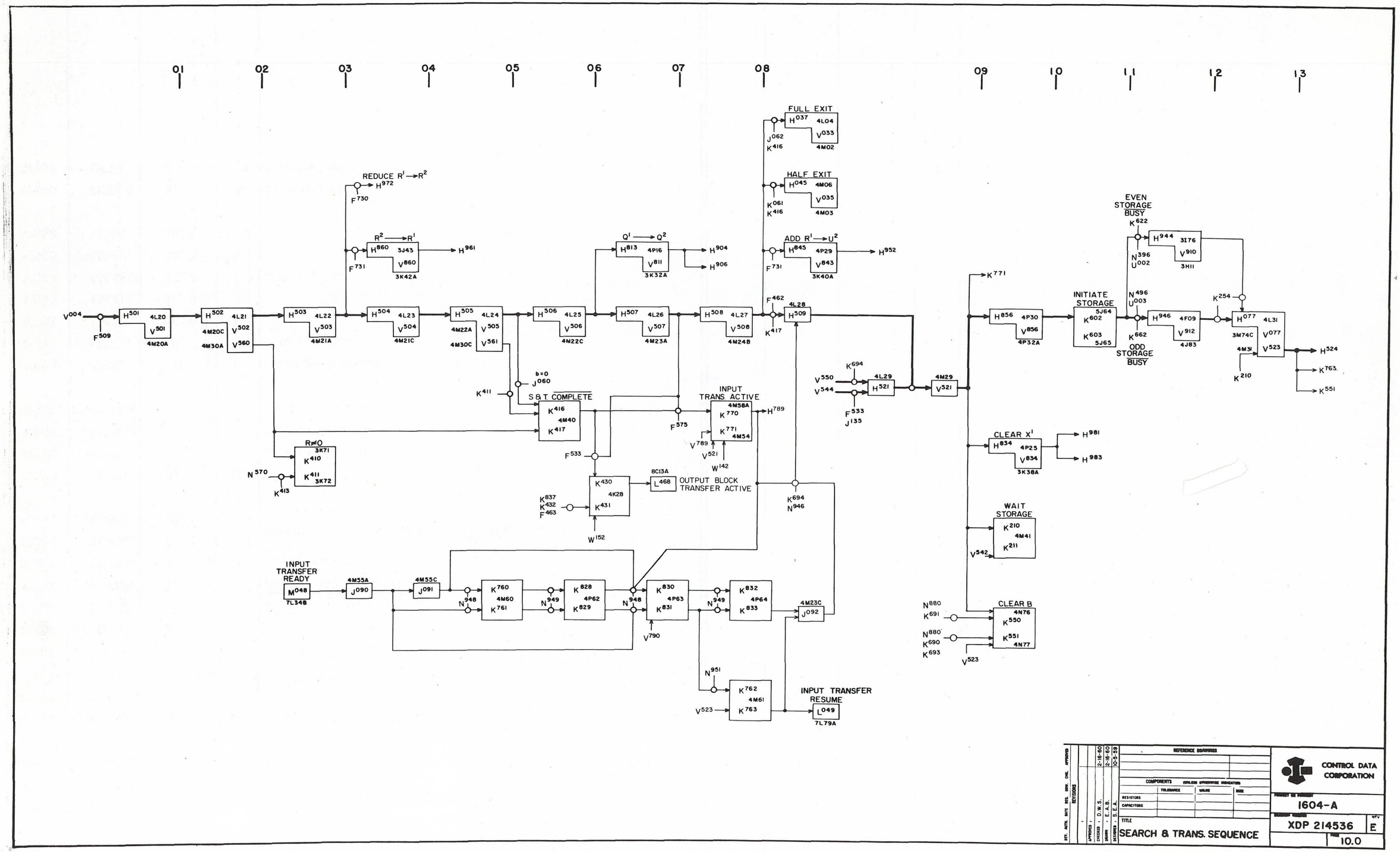
01
02
03
04
05
06
07
08
09
10
11
12
13
FULL EXIT
HALF EXIT
ADD R¹ → U²
REDUCE R¹ → R²
R² → R¹
Q¹ → Q²
EVEN STORAGE BUSY
INITIATE STORAGE
ODD STORAGE BUSY
S & T COMPLETE
INPUT TRANS ACTIVE
OUTPUT BLOCK TRANSFER ACTIVE
CLEAR X¹
WAIT STORAGE
CLEAR B
INPUT TRANSFER READY
INPUT TRANSFER RESUME
REFERENCE DRAWINGS
COMPONENTS (UNLESS OTHERWISE INDICATED)
TOLERANCE
VALUE
SIZE
RESISTORS
CAPACITORS
TITLE
SEARCH & TRANS. SEQUENCE
CONTROL DATA CORPORATION
1604-A
XDP 214536
E
10.0

TERM	LOCATION	PAGE	QUAD.	DEFINITION
F462	4K74A	19.3	3	$\overline{62}$
F463	4K73C	19.3	1	$\overline{63}$
F533	4M14B	19.4	0	63
F547	4N02C	19.4	1	64 + 65
F548	4N03A	19.4	1	66+ 67
F575	4N07C	19.4	1	62
K208	3O31A	11	0	Iterative Wait Storage
K211	4M41C	10.0	3	S & T Wait Storage
K218	4O80A	5	1	Indirect Wait Storage
K252	4N17A	17.0	2	Aux. Seq. Wait Storage
K413	3K73B	21	0	R ≠ 0 Slave
K690	3L63A	10.2	3	Interrupt + Clock Request During 63 (I) FF
K691	3L63C	10.2	3	
N570	5L62	21	2	R = 0
N946	4P60B			Even Clock Slave
N948	4N82B			Even Clock Slave
N951	4N84B			Odd Clock Slave
V073	3H08	54.0, .1	1	Storage Resume
V075	4I84	54.0, .1	1	Storage Resume
V521	4M29	10.0	1	
V523	4M31	10.0	1	
V544	4M48C	10.2	0	S & T Seq.
V545	4M49	10.2	0	
V552	4I10A	10.2	2	
W140	4K76A	25	0	Internal M.C.
W142	4K77	25	0	Internal M.C.

TERM	LOCATION	PAGE	QUAD.	DEFINITION

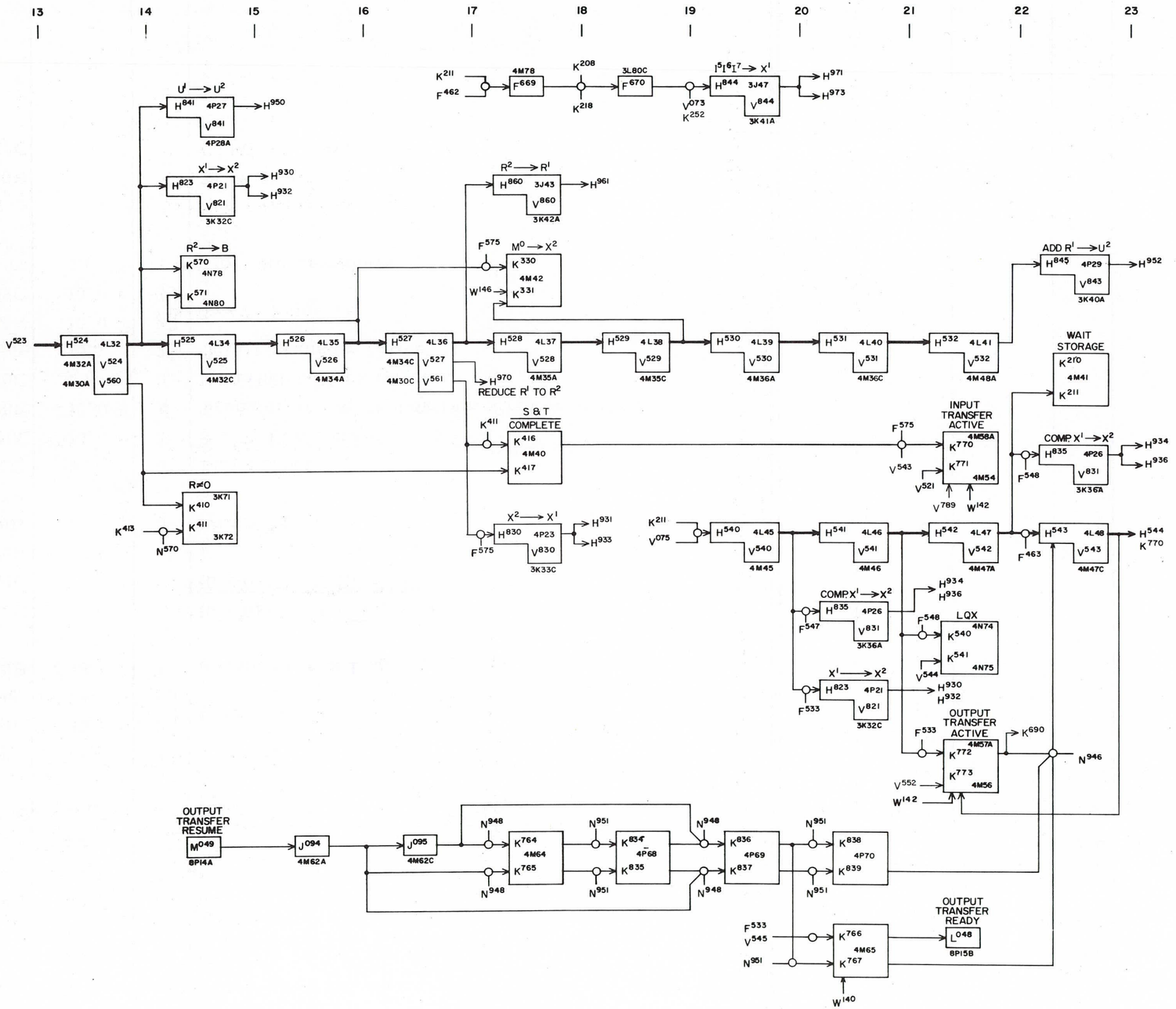

REV.	AUTH.	DATE	REL.	DRW.	CHK.	APPROVED
REVISIONS						
APPROVED						2-10-60
CHECKED	D.W.S.					2-10-60
DRAWN	R.R.M.					10-29-59
DESIGNED	S.E.A.					

REFERENCE DRAWINGS

COMPONENTS (UNLESS OTHERWISE INDICATED)

	TOLERANCE	VALUE	SIZE
RESISTORS			
CAPACITORS			

TITLE

SEARCH & TRANSFER SEQ.

CONTROL DATA CORPORATION

PROJECT OR PRODUCT

1604-A

DRAWING NUMBER

XDP 214537 C

PAGE 10.1

TERM	LOCATION	PAGE	QUAD.	DEFINITION
A990	1L46A	52	0	X > A
A993	4K62A	52	1	X = A
F533	4M14B	19.4	0	63
F575	4N07C	19.4	1	62
F660	4K74C	19.5	1	62 + 63
F661	4K63A	19.5	1	X5 + X7
F662	4K63C	19.5	1	X4 + X6
F671	4M39C	19.5	3	$\overline{(64 + 66)\,(X = A)} + \overline{(65 + 67)\,(X>A)}$
H543	4L48	10.1	3	S & T Seq.
H787	4O55	33	0	Interrupt Seq.
H789	4N70	33	0	
H791	6P69B	33	3	Advance Clock Logic
J135	4K39C			(b ≠ 0) (S & T $\overline{\text{Complete}}$)
J136	4K34C			$\overline{(b \neq 0)\,(S \& T\ \text{Complete})}$
K060	4K16B	5	0	Exit FF Clear
K061	4K17B	5	0	Exit FF Set
K067	4L16C	5	0	Exit FF Set
K417	4M40C	10.0	2	S & T $\overline{\text{Complete}}$
K431	4K28C	10.0	2	Transfer active FF For Line Printer on Chnl. 7
K695	4N69C	33	0	Interrupt + Clock Request
K773	4M56B	10.1	3	Output Transfer Active
K830	4P63A	10.0	2	S & T Sequence
K831	4P63C	10.0	2	
K883	4N81C	33	3	Clock Request Slave
N940	4M74A			Even Clock Slave
N946	4P60B			Even Clock Slave
N953	4L43C			Odd Clock Slave

TERM	LOCATION	PAGE	QUAD.	DEFINITION
V012	4M77	5, 25	2	Clear Control FF's
V507	4M23A	10.0	0	S & T Sequence
V521	4M29	10.0	1	
V541	4M46	10.1	3	
V543	4L47C	10.1	1	
W140	4K76A	25	0	Internal M.C.
W142	4K77	25	0	
W144	4K78	25	1	

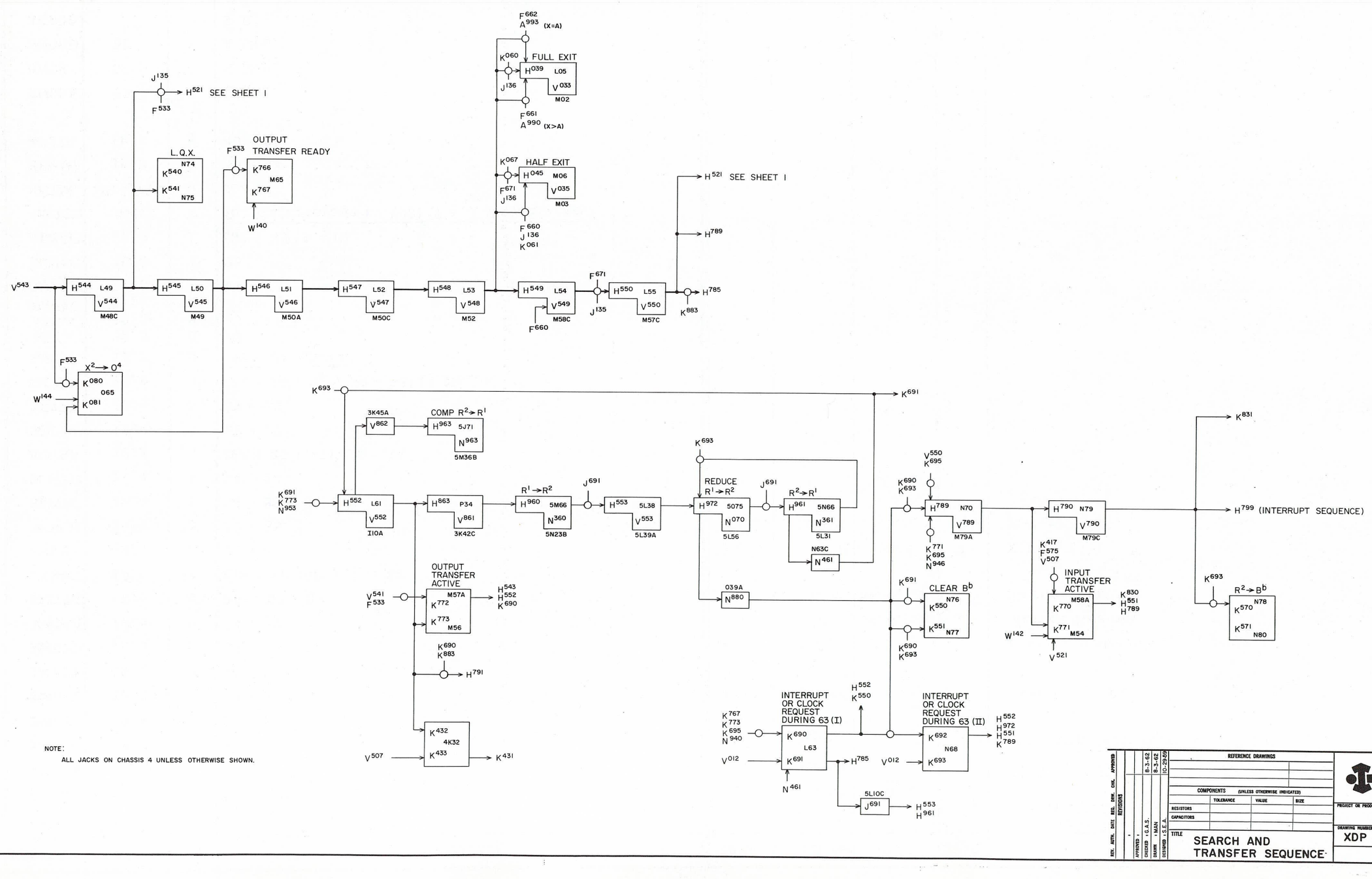

NOTE:
ALL JACKS ON CHASSIS 4 UNLESS OTHERWISE SHOWN.

REV.	AUTH.	DATE	REVISIONS	DRW.	CHK.	APPROVED

APPROVED		
CHECKED	I.G.A.S.	8-3-62
DRAWN	I.MAN	8-3-62
DESIGNED	S.E.A.	10-29-59

REFERENCE DRAWINGS

COMPONENTS (UNLESS OTHERWISE INDICATED)

	TOLERANCE	VALUE	SIZE
RESISTORS			
CAPACITORS			

TITLE
SEARCH AND TRANSFER SEQUENCE

CONTROL DATA CORPORATION

PROJECT OR PRODUCT
1604-A

DRAWING NUMBER
XDP 214528

REV.
E

PAGE
10.2

TERM	LOCATION	PAGE	QUAD.	DEFINITION
F382	6J03A	19.2	1	$\overline{(24 + 25 + 27)\ (SR = 1)}$
F384	6J03C	19.2	1	(30 + 31) (SR ≠ 1)
F425	3M23A	19.3	2	$\overline{25}$
F432	3M25C	19.3	0	$\overline{32}$
F512	3M82A	19.4	0	24 - 27 + 30 - 33
F513	3M82C	19.4	0	24 + 26
F514	3M81A	19.4	2	25 + 27
F517	3M80B	19.4	2	25 + 26 + 27
F525	3M76A	19.4	0	24 + 27
F526	3M77C	19.4	0	25 + 27 + 33
F536	3N84C	19.4	2	(30 + 31) (SR ≠ 1) + 32 + 33
F540	3N81B	19.4	2	30 + 31
F541	3N80B	19.4	2	30 - 33
F546	3M78C	19.4	1	24 + 26 + 30 + 31
F555	3O82B	19.4	1	24 - 27
F561	3O79A	19.4	3	(24 + 25 + 27) (SR = 1)
F565	3O79C	19.4	3	26 + 27
F587	3J55B	19.4	3	27 + 33
F590	3K41C	19.4	3	(24 + 26 + 27 + 30 - 33) (A Neg.)
F612	3M17C	19.5	0	$\overline{(32 + 33)\ (A = 0)}$
F616	3K29C	19.5	0	32
F620	3K28C	19.5	0	24 + 26 + 32
F630	3K27C	19.5	0	27
F641	3P27B	19.5	2	30 - 33
F653	3K24C	19.5	1	25
F663	3L84C	19.5	1	(32 + 33) (A = 0)
F669	4M78B	8.0	3	$\overline{\text{RO Wait Storage I + (62) (S \& T Wait Storage)}}$
F731	3N12A	19.5, 8.0	0	b ≠ 0
F741	3P24B	19.6	2	30 - 33
F940	3P21B	19.6	3	30 + 31
J129	3N04A	52	3	Q Neg.
J171	3N06	52	3	X Neg.
J173	3N05B	52	3	A Neg.
J175	3K09B			S.R. = 1

TERM	LOCATION	PAGE	QUAD.	DEFINITION
K208	3O31A	11	0	Iterative Wait Storage FF
K209	3O31C	11	0	
K218	4O80A	5	1	$\overline{\text{Indirect Wait Storage}}$
K252	4N17A	17.0	2	$\overline{\text{Aux. Seq. Wait Storage}}$
N934	3O49A			Even Clock Slave
V002	4J03	5	1	Execute Instruction
V073	3H08	54.0, .1	1	Storage Resume
V077	3M74C	54.0, .1	1	Storage Resume
X470	2O80B	49.4	2	X Pos.
X471	2O81B	49.4	2	X Neg.

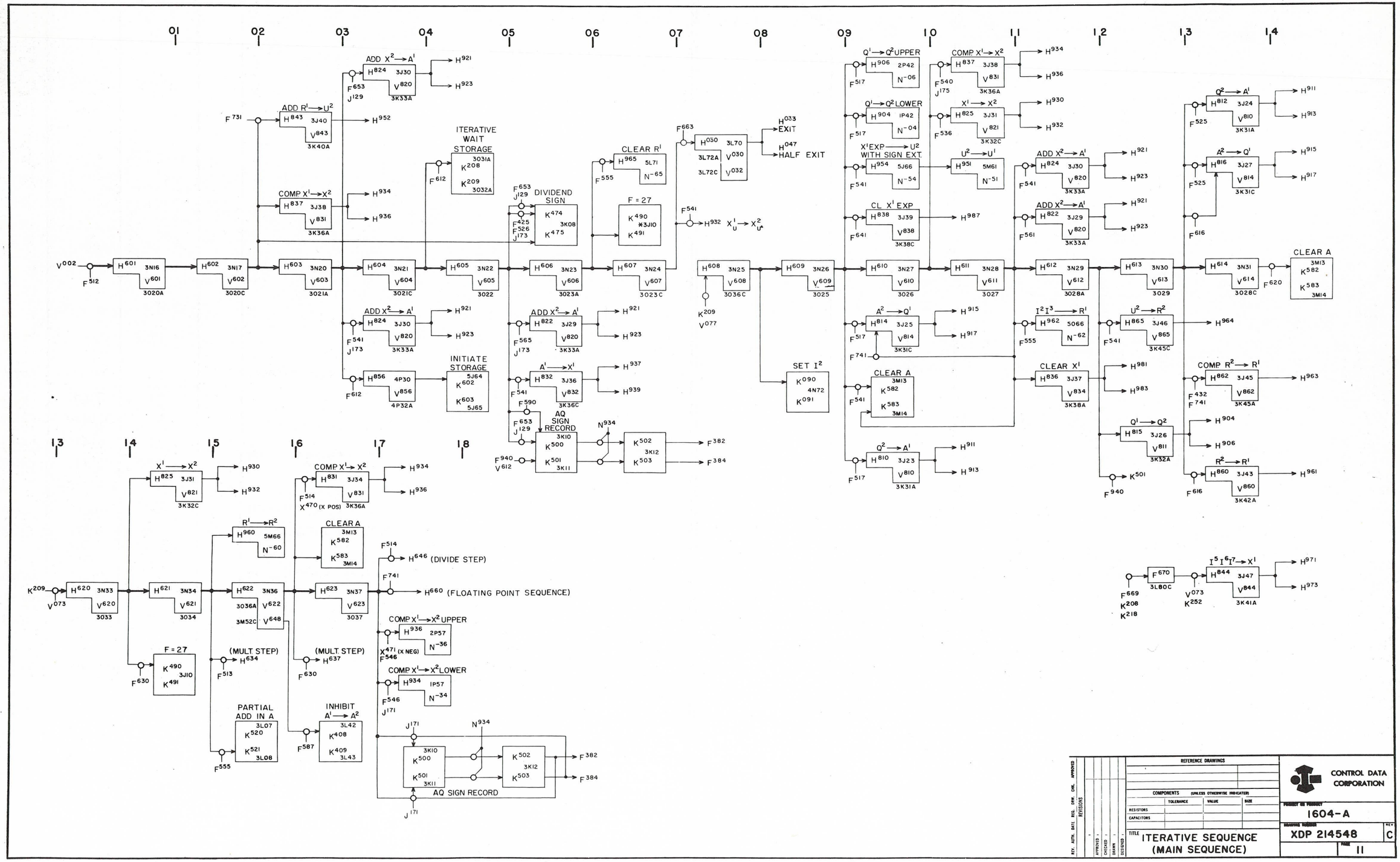

REFERENCE DRAWINGS

COMPONENTS (UNLESS OTHERWISE INDICATED)

	TOLERANCE	VALUE	SIZE
RESISTORS			
CAPACITORS			

REV. AUTH. DATE BIS. DWR. CHK. APPROVED
REVISIONS
APPROVED
CHECKED
DRAWN
DESIGNED

CONTROL DATA CORPORATION

PROJECT OR PRODUCT 1604-A

DRAWING NUMBER XDP 214548 REV C

TITLE ITERATIVE SEQUENCE (MAIN SEQUENCE)

PAGE 11

TERM	LOCATION	PAGE	QUAD.	DEFINITION
F477	3K24A	19.3	3	$\overline{36 + 37}$
F513	3M82C	19.4	0	24 + 26
F514	3M81A	19.4	0	25 + 27
F587	3J55B	19.4	3	27 + 33
F616	3K29C	19.5	0	32
F630	3K27C	19.5	0	27
K476	3M32B	51	1	Scale Termination
N570	5L62	21	2	R = 0
N670	5O61	21	2	R = 0,1
N930	3J76A			Even Clock Slave
V010	3L79	25	1	Clear Control FF's
V011	3L78C	25	1	Internal M.C.
V621	3O34	11	2	Iterative Sequence
V622	3O36A	11	2	
V623	3O37	11	2	
V675	3O63C	13	2	
V660	3O52A	13	0	
W147	3J06C	25	2	Internal M.C.

TERM	LOCATION	PAGE	QUAD.	DEFINITION

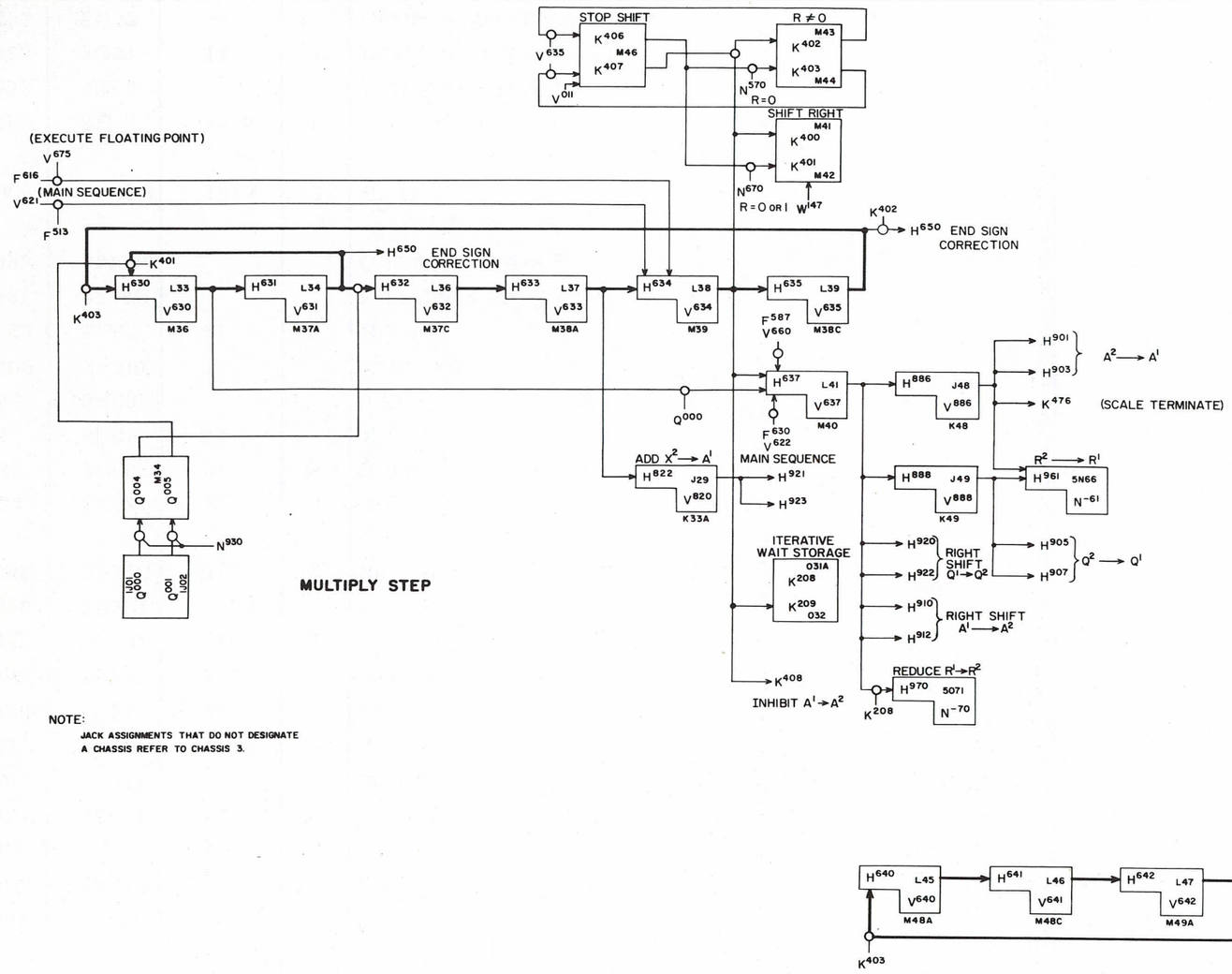

MULTIPLY STEP

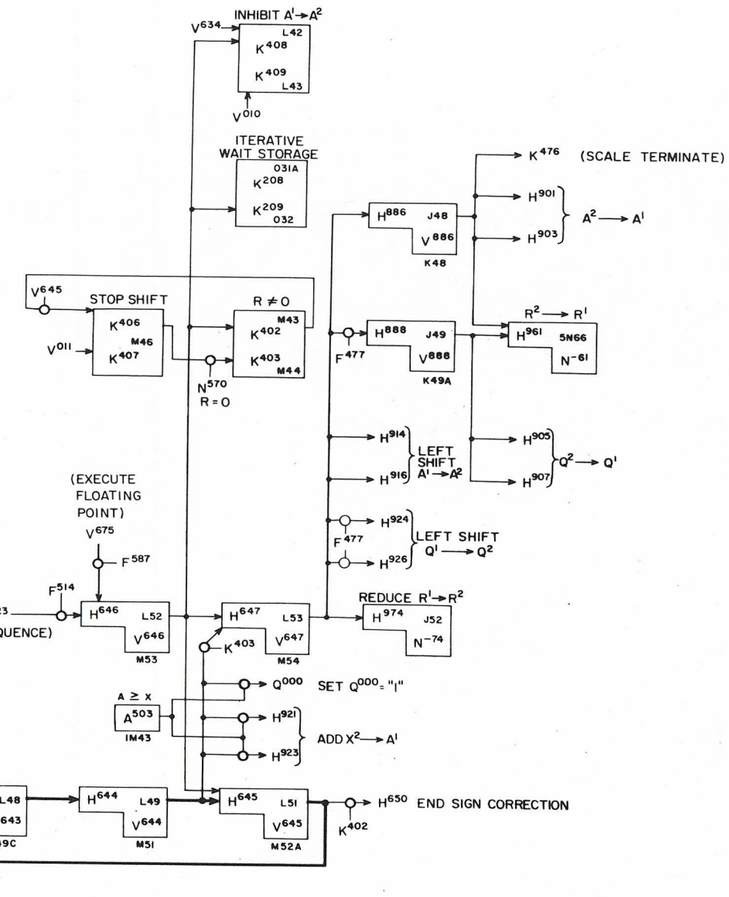

NOTE:

JACK ASSIGNMENTS THAT DO NOT DESIGNATE A CHASSIS REFER TO CHASSIS 3.

REV.	AUTH.	DATE	REVISIONS	DRW.	CHK.	APPROVED

APPROVED -
CHECKED - Jan-75
DRAWN - E.A. BUTENHOFF 2-8-60
DESIGNED - S. [illegible] 6-11-64

REFERENCE DRAWINGS

COMPONENTS (UNLESS OTHERWISE INDICATED)	TOLERANCE	VALUE	SIZE
RESISTORS			
CAPACITORS			

CONTROL DATA CORPORATION

PRODUCT OR PROJECT: 1604-A

TITLE: ITERATIVE SEQUENCE (MULTIPLY & DIVIDE CONTROL)

DRAWING NUMBER: XDP 214589 REV. E

SHEET: 2 OF 5 PAGE: 12

TERM	LOCATION	PAGE	QUAD.	DEFINITION
A997	3K54C	52	0	X = A
F430	3M24C	19.3	2	$\overline{30}$
F432	3M25C	19.3	0	$\overline{32}$
F440	3M09A	19.3	0	30 + 31
F537	3N83B	19.4	2	32 + 33
F540	3N81B	19.4	2	30 + 31
F587	3J55B	19.4	3	27 + 33
F610	3K54A	19.5	0	$\overline{(32)(X = A)}$
F616	3K29C	19.5	0	32
F637	3P29B	19.5	0	32 + 33
F640	3P28B	19.5	2	30 + 31
F737	3P26B	19.6	2	32 + 33
F740	3P25B	19.6	2	30 + 31
F741	3P24B	19.6	2	30 - 33
F837	3P23B	19.6	1	32 + 33
F840	3P22B	19.6	1	30 + 31
F940	3P21B	19.6	3	30 + 31
J134	3N08A	21	3	$R \leq 36_{10}$
J137	3N08C	21	3	$R > 36_{10}$
J171	3N06	52		X Neg.
J175	3K09B			S.R. = 1
K500	3K10B	11		S.R. = 0
N570	5L62	21	2	R = 0
N931	3J76C			Odd Clock Slave
N991	3M09C			Odd Clock Slave
U143	5L59B	18.3	2	U^2 Neg.
V010	3L79	25.5	1	Clear Control FF's
V223	3K69C			Full Exit + Half Exit
V623	3O37	11	2	Iterative Sequence
V693	3P57	14	2	Iterative Sequence
W149	3J07C	25	2	Internal Master Clear

TERM	LOCATION	PAGE	QUAD.	DEFINITION

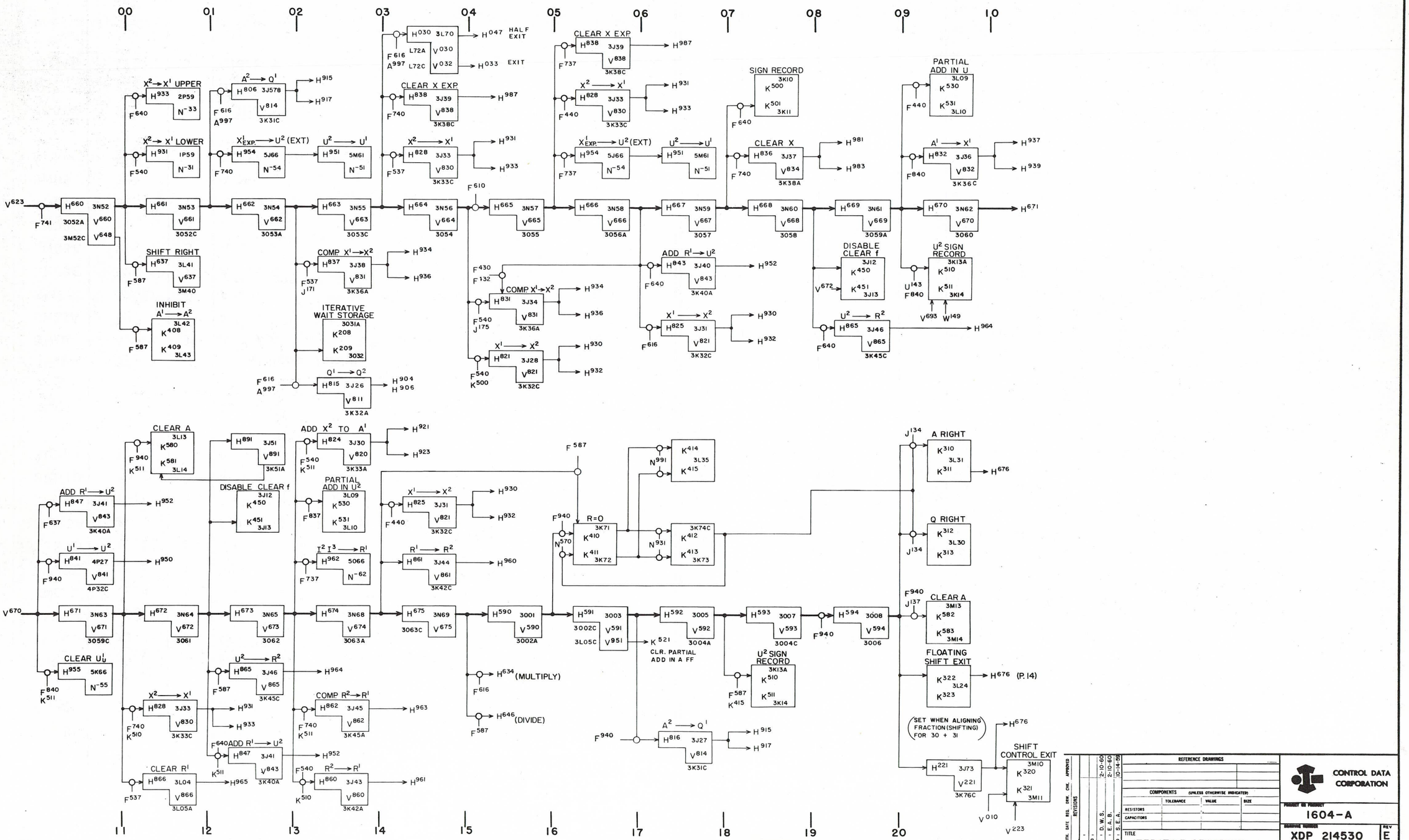

REV.	AUTH.	DATE	REQ. DRW.	CHK.	APPROVED
REVISIONS					
-					

APPROVED : -
CHECKED : D. W. S. 2-10-60
DRAWN : E. A. B. 2-10-60
DESIGNED : S. E. A. 10-14-59

REFERENCE DRAWINGS

COMPONENTS (UNLESS OTHERWISE INDICATED)

	TOLERANCE	VALUE	SIZE
RESISTORS			
CAPACITORS			

CONTROL DATA CORPORATION

PROJECT OR PRODUCT: 1604-A

DRAWING NUMBER: XDP 214530 REV E

PAGE 13

TITLE: ITERATIVE SEQUENCE EXECUTE FLOATING POINT

TERM	LOCATION	PAGE	QUAD.	DEFINITION
A342	2N31B	47.3		A^{34} = "O"
A343	2N32B	47.3		A^{34} = "1"
A352	2O31B	47.3		A^{35} = "O"
A353	2O32B	47.3		A^{35} = "1"
A473	2O78B	47.4		A Neg.
A996	6H09C	52	0	$A \neq 0$
F390	6J07C	19.2	3	$\overline{(30 - 33)\ (A\ Pos) + Adv.\ Clock}$
F391	6K14C	19.2	3	$\overline{(30 - 33)\ (A\ Neg)}$
F440	3M09A	19.3	0	30 + 31
F540	3N81B	19.4	2	30 + 31
F637	3P29B	19.5	0	32 + 33
F641	3P27B	19.5	2	30 - 33
F650	3M25A	19.5	1	$(30 + 31)\ (U^2SR = 1) + 33$
F676	1J70A	19.5	1	05 + 34 + 37 + Normalize
F741	3P24B	19.6	2	30 - 33
F940	3P21B	19.6	3	30 + 31
H866	3L04	21	1	Clear R^1
J110	3N11A	52	1	A, Q Signs Unlike
J111	3N11C	52	1	$A^{36} \neq A^{37}$
J123	3N13A	52	1	$A^{35} = A^{36}$
J130	3M65C	52	0	A = 0
J131	3N03C	52	1	$A^{36} = A^{37}$
J134	3N08A	21	3	$R \leq 36_{10}$
J137	3N08C	21	3	$R > 36_{10}$
J172	3N07	52	1	A Pos.
J173	3N05	52	1	A Neg.
J529	6L56C	30	1	Clear Arithmetic Faults
K310	3L31A	51	0	$\overline{A\ Right\ Shift}$
K410	3K71B	21	2	$\overline{R \neq 0}$
K583	3M14B	47	3	Clear A^1

TERM	LOCATION	PAGE	QUAD.	DEFINITION
N932	3L20A			Even Clock Slave
N934	3O49A			Even Clock Slave
N935	3O49C			Odd Clock Slave
U132	5L60B	18.3	2	U^{13} = "0"
U133	5L59B	18.3	2	U^{13} = "1"
U707	5O63B	53	3	Exponent Fault
V011	3L78C	25	1	Internal M.C.
V221	3K76C	13	3	Iterative Sequence
V659	3O45C	15	1	Iterative Sequence
W147	3J06C	25	2	Internal M.C.
W148	3J07A	25	2	Internal M.C.
W159	6L52	25	1	External M.C.
W167	6L57	25	1	External M.C.
W170	6N49	25	2	Internal M.C.
W184	6O77	25	2	Internal M. C.

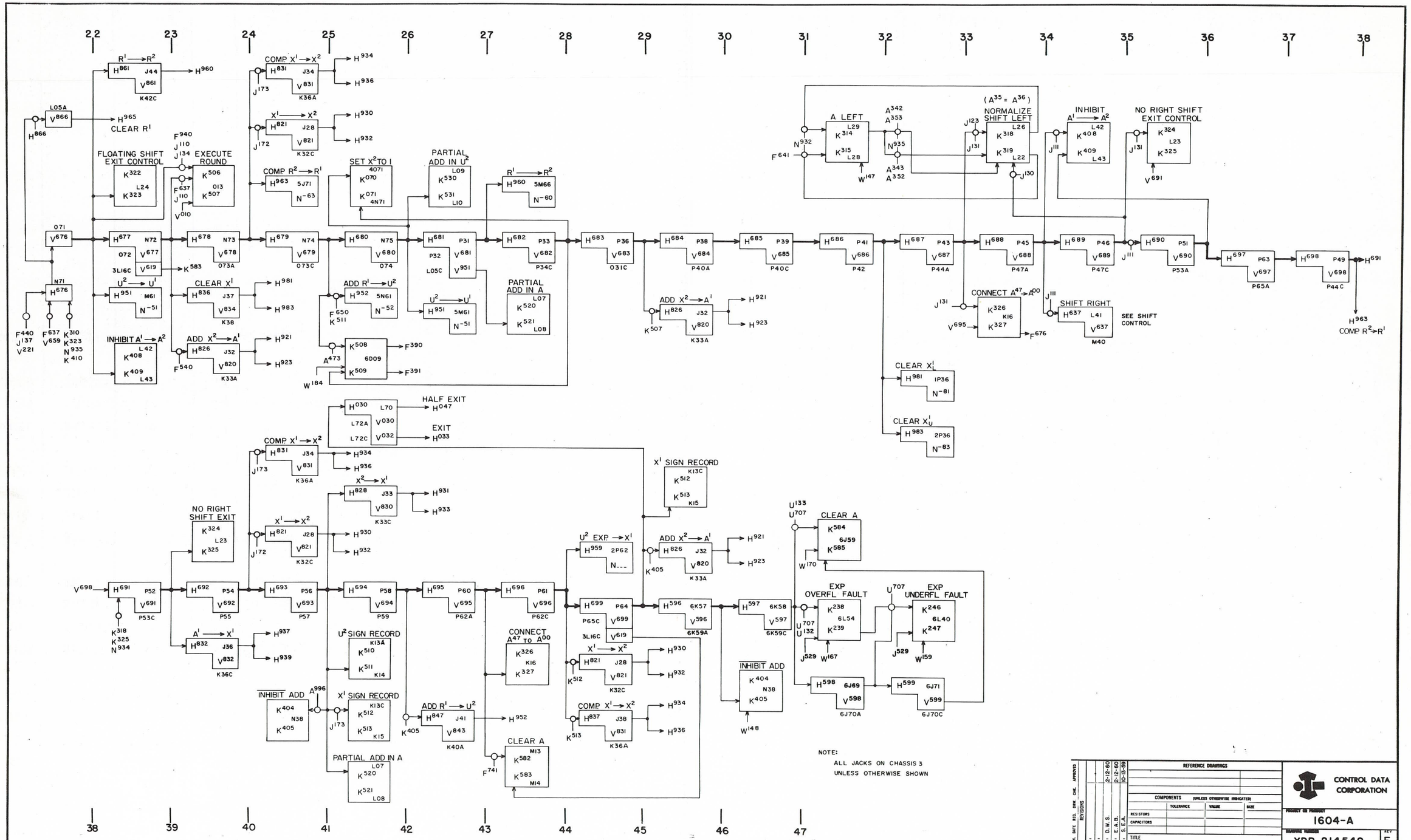

REV.	AUTH.	DATE	REG.	DRW.	CHK.	APPROVED
REVISIONS						
						APPROVED -
						CHECKED - D.W.S. 2-12-60
						DRAWN - E.F.A. 2-12-60
						DESIGNED - G.S.A. 10-1-59

REFERENCE DRAWINGS

COMPONENTS (UNLESS OTHERWISE INDICATED)	TOLERANCE	VALUE	SIZE
RESISTORS			
CAPACITORS			

CONTROL DATA CORPORATION

PRODUCT OR PROJECT: 1604-A

DRAWING NUMBER: XDP 214549 REV. F

PAGE 14

TITLE: ITERATIVE SEQUENCE EXECUTE ROUND, NORMALIZE, FINAL ASS'Y.

TERM	LOCATION	PAGE	QUAD.	DEFINITION
F433	6M26A	19.3	0	$\overline{33}$
F518	3M79B	19.4	2	26 + 32
F526	3M77C	19.4	0	25 + 27 + 33
F620	3K28C	19.5	0	24 + 26 + 32
F625	6J80C	19.5	0	25 + 27
F637	3P29B	19.5	0	32 + 33
F903	3M28C	19.6	1	24 - 27
K400	3M41B	51	1	$\overline{\text{Shift Right}}$
K402	3M43B	51	3	$\overline{R \neq 0}$ In Divide Shift Control
K475	3K08C	11	0	Dividend SRFF = 1
K501	3K11B	11	2	AQ SR = "1"
Q004	3M34A	47.5		Second Bit of Q^2 = "0"
Q758	2M16	52	2	$Q^{24} - Q^{29}$ = 1's
Q818	2K41	52	2	$\overline{Q^{30} - Q^{35} = 1's}$
Q982	1F76C	52		$\overline{O^{00} - O^{23} = 1's}$
V631	3M37A	12	0	Iterative Sequence
V635	3M38C	12	0	
V645	3M52A	12	3	
W773	6L27C	52	1	Q Neg.

TERM	LOCATION	PAGE	QUAD.	DEFINITION

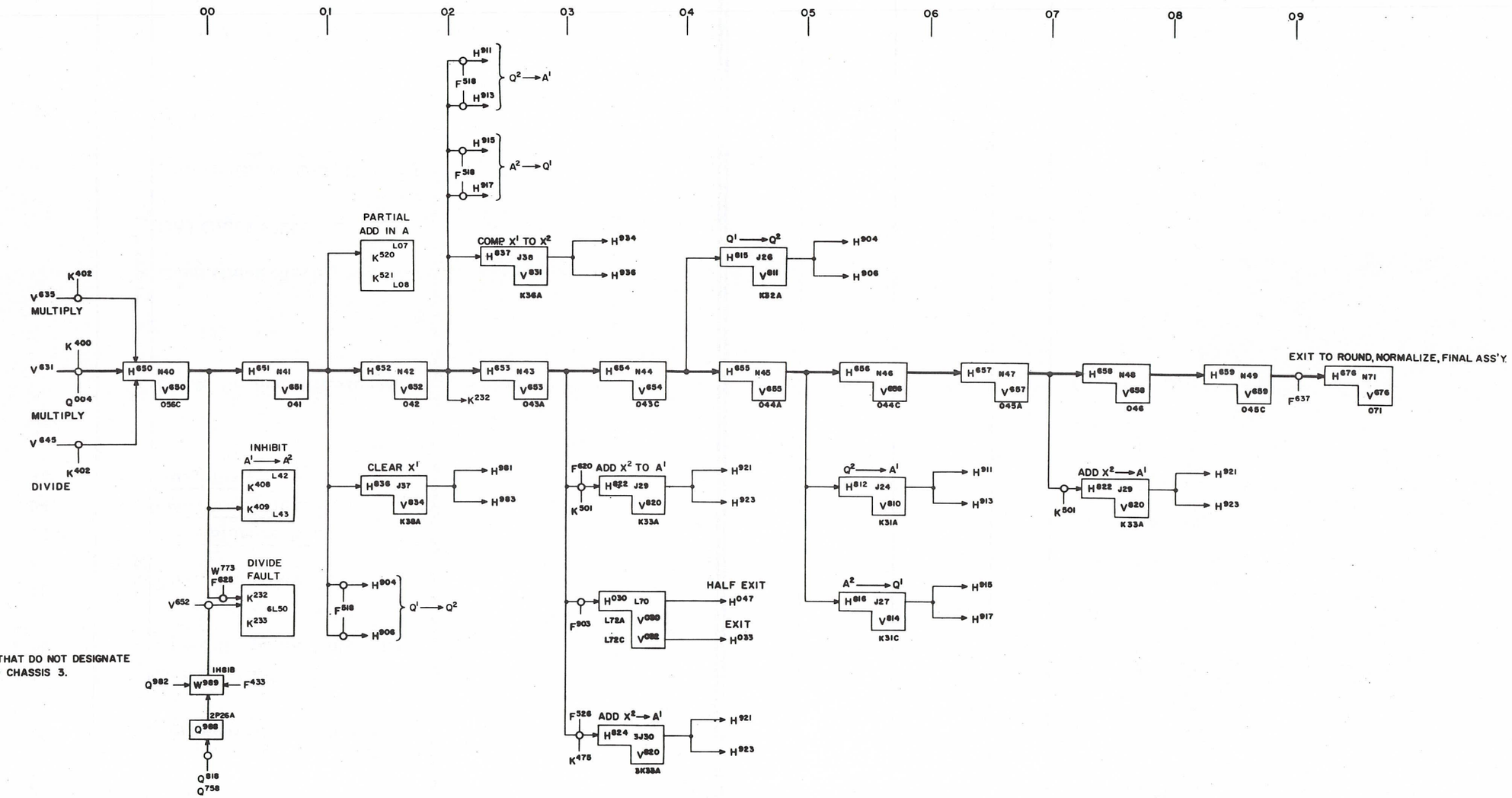

NOTE:

JACK ASSIGNMENTS THAT DO NOT DESIGNATE A CHASSIS REFER TO CHASSIS 3.

REV.	INITL	DATE	BY	CHK.	APPROVED
REVISIONS					

APPROVED
CHECKED 1-19-60
NAME I.E.A. BUTENHOFF 1-18-60
DRAWN 10-15-59

REFERENCE DRAWINGS

COMPONENTS (UNLESS OTHERWISE INDICATED)	TOLERANCE	VALUE	SIZE
RESISTORS			
CAPACITORS			

TITLE ITERATIVE SEQUENCE (END SIGN CORRECTION)

CONTROL DATA CORPORATION

PROJECT 1604-A

DRAWING NUMBER XDP 214562 REV.

PAGE 15

TERM	LOCATION	PAGE	QUAD.	DEFINITION
F527	3N84A	19.4	0	04 + 10 + 11
F534	4N16A	19.4	0	74
F535	4M15A	19.4	2	74.0 + 74.7
F558	4M15C	19.4	3	74.1 - 74.6
F717	4N39B	19.6	2	b = 1 - 6
F720	6J10A	19.6	3	b = 0
F727	6J10C	19.6	1	b = 7
H027	6M61	29	1	Resynchronizing Circuit
J062	4J62	4	0	Exit FF Clear
J968	7P61	30	2	Sense Response (Internal)
K262	4N33A	45	1	Aux. Req. Slave
K263	4N33C	45	1	
K622	3H01B	54.0	2	$\overline{\text{Even Storage Busy}}$
K662	4I76B	54.1	2	$\overline{\text{Odd Storage Busy}}$
K712	4O06B	45	3	$\overline{\text{Aux. Req.}}$
M051	8P14C			Sense Response (External)
M151	8P19C			
M251	8P22C			
M351	8P25C			
N964	6O66B			Even Clock Slave
N966	6N82A			
N969	6P64B			Odd Clock Slave
O^{000}	8J09A	63	3	Lowest Bit of EXF Code = 0
U142	5L60B	18.3	2	U^2 Positive

TERM	LOCATION	PAGE	QUAD.	DEFINITION
V004	4J04	5	3	Execute Instruction
V026	6M59	29	3	Even Resync. Pulse
V027	6M60	29	3	Odd Resync. Pulse
V457	6N64	17.1	0	Aux. Seq.
W142	4K77	25	0	Internal M.C.
W154	6L61C	25	2	Internal M.C.

00 01 02 03 04 05 06

LOAD EXTERNAL FUNCTION CHANNEL

$X^1 \rightarrow X^2$ H^{930} 1P58 N^{-30} — X^{001} — X^{--2} / X^{--3} — X^{000}

$X^1 \rightarrow X^2$ H^{823} 4P21 V^{821} 3K32C — F^{535}

$X^1 \rightarrow X^2$ H^{932} 2P58 N^{-32}

I^{0--} — O^{0--} — O^{0--} — L — L — L — L

V^{004} F^{534} → H^{701} 4N10 V^{701} 4010 → H^{702} 4N11 V^{702} 4011 → H^{703} 4N12 V^{703} 4012A → H^{704} 4N13 V^{704} 4012C → H^{705} 4N14 V^{705} 4013A → H^{706} 4N15 V^{706} 4052C → H^{171} (H.S. STORAGE SEQ.)

K^{712} F^{717} → K^{622}

K^{712} F^{717} → K^{662}

F^{535} — K^{262} F^{717} — K^{263} F^{717}

F^{717} — H^{706} 4N15 V^{706} 4052C → H^{171} (H.S. STORAGE SEQ.)

F^{558} — f = 74.1-6 — K^{216} 4P42C / K^{217} 4042B — W^{142} V^{457} — WRITE UPPER J^{834} 4J15C

J → AUX. REF REG. H^{780} 6N61 N^{086} 6076

F^{720} — SELECT — K^{716} 6M52 / K^{717} 6M47 — W^{153}

H^{709} 6L45 V^{709} 6L46 — V^{026} K^{147} J^{149}

F^{727} — SENSE — K^{718} 6M54 / K^{719} 6M53 — W^{154}

ENABLE SENSE EXIT — K^{138} 6K47 K^{139} — V^{027} K^{032} K^{036}

U^{142} → W^{910} 3M65A — F^{527} — H^{943} / H^{941}

$U^2 \rightarrow X^1$ WITH EXTENSION H^{898} 3L15 V^{892} 3L16A

K^{717} K^{033} — J^{913} 6M66A — K^{037} K^{147} — K^{719} K^{033}

K^{716} → FUNCTION READY J^{451} 8N01

K^{034} → SENSE READY J^{450} 8N02 — K^{718}

INTERNAL J^{968}

CHANNEL 7 M^{051}

CHANNELS 1,2 M^{151}

CHANNELS 3,4 M^{251}

CHANNELS 5,6 M^{351}

8N13C J^{914} — SENSE RETURN J^{915} 8N14A — O^{000} — 8N14C J^{916} — O^{000}

H^{027} — K^{718} K^{030} V^{125} 6M58 — K^{146}

J^{062} K^{717} — SENSE RESYNC — K^{136} 6M56 / K^{137} — V^{027} K^{030} K^{032}

V^{026} — FULL EXIT H^{039} 4L05 V^{033} 4M02

V^{026} — HALF EXIT H^{047} 4M07 V^{035} 4M03

RANK I — RANK II

K^{135} K^{146} J^{051} / K^{131} K^{132} — N^{966} — K^{036} 6L73 / K^{037} — K^{716} K^{718} — K^{146} 6L74 / K^{147}

K^{131} K^{133} / K^{134} / K^{133} K^{135} K^{037} — N^{964} — K^{034} 6M57 / K^{035} — K^{716} K^{718} — K^{134} 6M40 / K^{135} — V^{027}

K^{131} K^{132} / K^{131} K^{133} — K^{032} 6M49 / K^{033} — K^{716} K^{718} — K^{132} K^{133} 6M48 6M55 — 6N82C J^{149}

K^{130} / K^{131} — K^{030} 6M50 / K^{031} — K^{716} K^{718} — K^{130} 6M51 / K^{131} — 6L69A J^{051} → K^{036}

V^{026} — N^{969}

E F COUNTER

REV.	AUTH.	DATE	REG.	DRW.	CHK.	APPROVED
REVISIONS						
						APPROVED: -
						CHECKED I. D. W. S. 2-24-66
						DRAWN R. R. M. 2-24-66
						DESIGNED S. ASCHENBRENNER 9-30-59

REFERENCE DRAWINGS

CONTROL DATA CORPORATION

PROJECT OR PRODUCT 1604-A

DRAWING NUMBER XDP 214514 REV. H

TITLE EXTERNAL FUNCTION SEQUENCE

PAGE 16

TERM	LOCATION	PAGE	QUAD.	DEFINITION
F717	4N39B	19.6	2	b = 1 - 6
H061	3G01	54.0	2	Storage Sequence Control (Even)
H081	4G77	54.1	2	Storage Sequence Control (Odd)
I750	8O30	40	1	Content of C.R. In Use Odd
I774	8M32	40	1	Content of C.R. In Use Even
J835	4O41A	42	2	Read Lower
J836	4O41C	42	2	Read Upper
J845	7M72C	45	2	Rank I Scanner Odd
K212	4O28A	63	1	Clear 0^- FF
K213	4O28C	63	1	
K217	4O42B	16	0	f = 74.1 - 74.6
K254	4P28B	45	1	$\overline{\text{Aux. Req.}}$
K622	3H01B	54.0	2	$\overline{\text{Even Storage Busy}}$
K624	3H02A	54.0	2	Diverter Drive (Even)
K662	4I76B	54.1	2	$\overline{\text{Odd Storage Busy}}$
K664	4I77A	54.1	2	Diverter Drive Odd
K712	4O06B	45	3	Aux. Req. FF
K713	4O07B	45	3	
K714	4P65B	45	3	$\overline{\text{Aux. Req.}}$
K768	4O74	45	1	$\overline{\text{Inhibit Rank I of Scanner} \rightarrow \text{ARD}}$
N901	4O38C			Odd Clock Slave
R039	4L42A	44	1	$CCR_U = \overline{00001 - 00006}$
R059	8P72C	44	1	$CCR_U = \overline{00001 - 00006}$
S011	3D80	56.0	3	Lowest Bit of S^1
S013	4D02	56.1	3	Lowest Bit of S^2
S021	3D82	56.0	3	Second Bit of S^1
S023	4D04	56.1	3	Second Bit of S^2

TERM	LOCATION	PAGE	QUAD.	DEFINITION
V174	4O14C	42	0	H.S. Storage Seq.
V176	4O21C	42	0	
V177	4O24A	42	1	
V178	4O24C	42	1	
V180	4O31C	42	1	
V181	4O34	42	1	
V187	4O46C	42	3	
V190	4O52A	17.1, 42	0, 3	Aux. Seq. or H.S. Storage Seq.
V448	4N26	17.1	0	Aux. Seq.
V456	6O48C	17.1	0	
V457	6N64	17.1	0	
V462	4P42A	42	3	H.S. Storage Seq.
V474	4M53C	17.1	1	Aux. Seq.
V476	4M59C	17.1	1	
V477	4M73A	17.1	1	
V480	6L69	17.1	1	
V487	4P43	42	0	H.S. Storage Seq.
V703	4O12A	16	0	EXF. Seq.
V900	3H09	54.0	2	Storage Seq. Control
V902	4I74	54.1	2	Storage Seq. Control
W162	7K50	25	0	External M.C.
W163	7J49	25	0	External M.C.
W183	6I51C	25	1	External M.C.

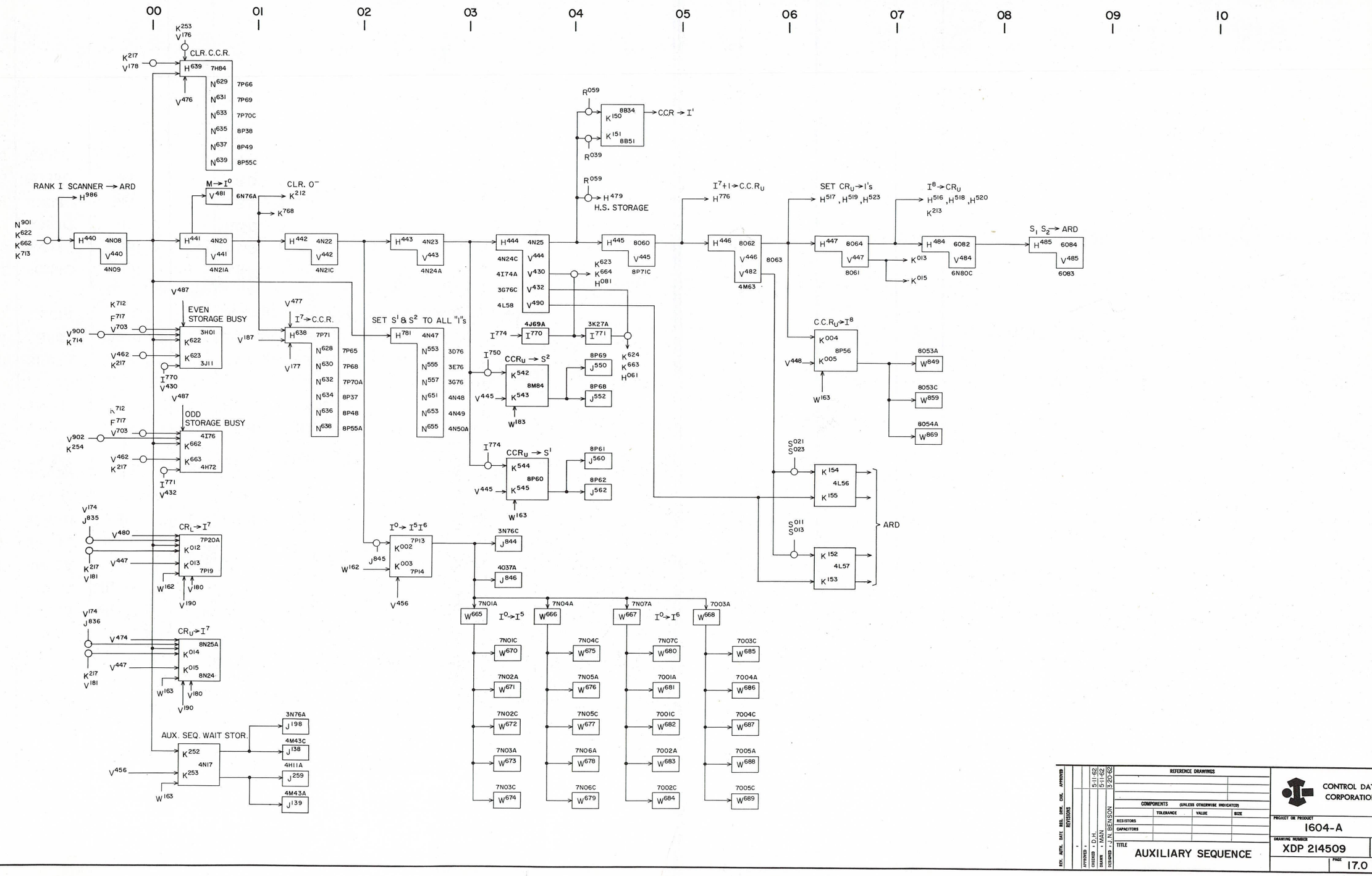

REV.	AUTH.	DATE	REQ.	DRW.	CHK.	APPROVED
REVISIONS						

APPROVED	-	5-11-62
CHECKED	D.H.	5-11-62
DRAWN	MAH	3-29-62
ISSUED	J. BENSON	

REFERENCE DRAWINGS

COMPONENTS (UNLESS OTHERWISE INDICATED)	TOLERANCE	VALUE	SIZE
RESISTORS			
CAPACITORS			

CONTROL DATA CORPORATION

PROJECT OR PRODUCT: 1604-A

TITLE: AUXILIARY SEQUENCE

DRAWING NUMBER: XDP 214509 E

PAGE: 17.0

TERM	LOCATION	PAGE	QUAD.	DEFINITION
H190	4O51	42	3	H.S. Storage Seq.
H638	7P71	17.0	0	$I^7 \rightarrow CCR$
H639	7H84	17.0	0	Clear CCR
H986	6O71	45	3	Rank I Scanner → ARD
J166	3F04A	54.0	2	Count of 3 In Even Storage Sequence Counter
J186	4F84A	54.1	2	Count of 3 In Odd Storage Sequence Counter
J259	4H11A	17.0	2	Aux. Seq. Wait Storage
K005	8P56C	17.0	1	$CCR_U \rightarrow I^8_U$
K012	7P20A	39, 17.0	2,2	$CR_L \rightarrow I^7$ FF
K013	7P19B	39, 17.0	2,2	
K014	8N25A	39, 17.0	3,2	$CR_U \rightarrow I^7$ FF
K015	8N24B	39,17.0	3,2	
K217	4D42B	16	0	f = 74.1 - 74.6
K253	4N17C	17.0	2	Aux. Seq. Wait Storage
K713	4O07B	45	3	Aux. Req.
K919	7K64C	71	1	Reader Motor FF
K768	4O74	45	1	Inhibit Rank I of Scanner → ARD
R907	6M63	36	2	$CCR_U = CCR_L$
R908	6M64	36	2	$CCR_U \neq CCR_L$
V063	3F07A	54.0	2	Storage Sequence Control (Even) 27 time
V073	3H08	54.0,.1	1	Storage Resume
V083	4F78A	54.1	2	Storage Sequence Control (Odd) 27 time
W821	6O36C	45	1	ARD = 1
W822	6N37	45	1	ARD = 2
W823	6O37C	45	1	ARD = 3
W824	6N38	45	1	ARD = 4
W825	6O38C	45	1	ARD = 5
W826	6N39	45	1	ARD = 6

TERM	LOCATION	PAGE	QUAD.	DEFINITION

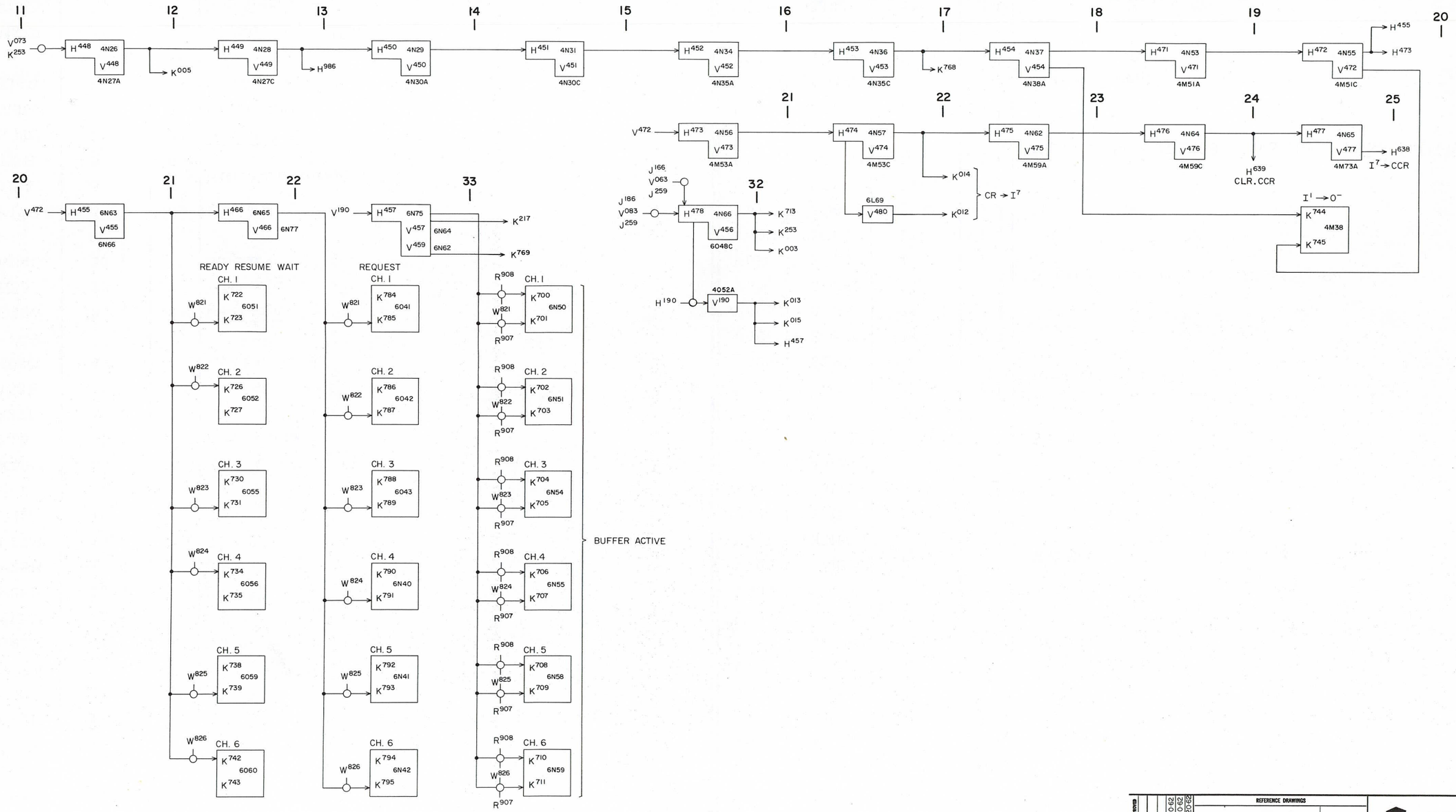

REV.	AUTH.	DATE	REQ.	DRW.	CHK.	APPROVED
REVISIONS						
APPROVED						
CHECKED	D.H.					5-10-62
DRAWN	MAN					5-10-62
DESIGNED	J.N. BENSON					3-20-62

REFERENCE DRAWINGS

COMPONENTS (UNLESS OTHERWISE INDICATED)

	TOLERANCE	VALUE	SIZE
RESISTORS			
CAPACITORS			

TITLE
AUXILIARY SEQUENCE

CONTROL DATA CORPORATION

PROJECT OR PRODUCT
1604-A

DRAWING NUMBER
XDP 214508 E

PAGE 17.1

TERM	LOCATION	PAGE	QUAD.	DEFINITION
F351	6K06C	19.2	1	$\overline{52 + 53}$
F541	3N80B	19.4	2	30 - 33
F549	3M71C	19.4	1	$\overline{34 + 35 + 50 + 55}$
F553	3O83B	19.4	1	56 + 57
F557	3O81B	19.4	3	22 + 23 + 75 + 76
F569	3O78A	19.4	1	20 + 21 + 47 + 60 + 61
F637	3P29B	19.5	0	32 + 33
F640	3P28B	19.5	2	30 + 31
F650	3M25A	19.5	1	(30 + 31) ($U^2SR = 1$) + 33
F730	4K65A	19.6	0	b ≠ 0
F731	3N12A	19.6	0	b ≠ 0
F737	3P26B	19.6	2	32 + 33
F740	3P25B	19.6	2	30 + 31
F840	3P22B	19.6	1	30 + 31
F940	3P21B	19.6	3	30 + 31
I250	4N59	33	3	$\overline{\text{Adv. Clock}}$
I284	4N58	33	2	Adv. Clock
I500	1A27B	55.0	3	Lowest Bit of I^5
I600	1A53B	55.1	3	Lowest Bit of I^6
I715	1E06C	43	1	Lowest Bit of I^7
J067	4O29C	33	2	$\overline{\text{Interrupt}}$
J068	6H83	33	2	Interrupt
J840	4N04C	28	1	Stop II F = "1"
K061	4K17B	5	0	Exit FF
K200	4J15A	5	0	RNI Wait Storage FF
K201	4J16B	5	0	
K405	3N38C	14	2	$\overline{\text{Inhibit Add}}$
K461	3M69C	9	3	Return Jump
K511	3K14B	13	1, 3	U^2SR = "1"
N254	5M16B			X^1 Exp → U^2 (Ext)
N931	3J76C			Odd Clock Slave
N950	5L46B			Even Clock Slave
N960	6P66B			Even Clock Slave

TERM	LOCATION	PAGE	QUAD.	DEFINITION
V005	4K02C	28	1	Manual Control Circuit
V010	3L79	25, 5	1, 2	Clear Control FF's
V077	3M74C	54.0, .1	1	Storage Resume
V094	4K06	5	0	RNI Seq.
V096	4K08C	5	0	
V099	4K11	5	1	
V151	4O75	5	1	
V153	4O84C	5	1	
V203	3K60	7	0	ZA Seq.
V302	4K20C	8.0	0	RO Seq.
V402	3M56C	9	0	WO Seq.
V405	3M62	9	3	
V406	3M59C	9	0	
V410	3M63A	9	3	
V420	3M73	9	3	
V431	3M74A	9	2	
V508	4M24B	10.0	1	S & T Seq.
V524	4M32A	10.1	0	
V532	4M48A	10.1	1	
V602	3O20C	11	0	Iterative Seq. (Main)
V609	3O25	11	1	
V661	3O52C	13	0	Iterative Seq. (Execute Floating Point)
V665	3O55	13	0	
V666	3O56A	13	0	
V668	3O58	13	1	
V670	3O60	13	1	
V672	3O61	13	2	
V676	3O71	14	0	Iterative Seq. (Round, Normalize, Final Ass'y)
V679	3O73C	14	0	
V680	3O74	14	0	
V694	3P59	14	2	
V786	4O57A	33	0	Interrupt Seq.
V871	4P38A	5	3	I^2, I^3, → R^1
W150	3J08	25	3	Internal M.C.
W156	5K39	25	2	
W781	4P14C	60	3	No Buffer Active

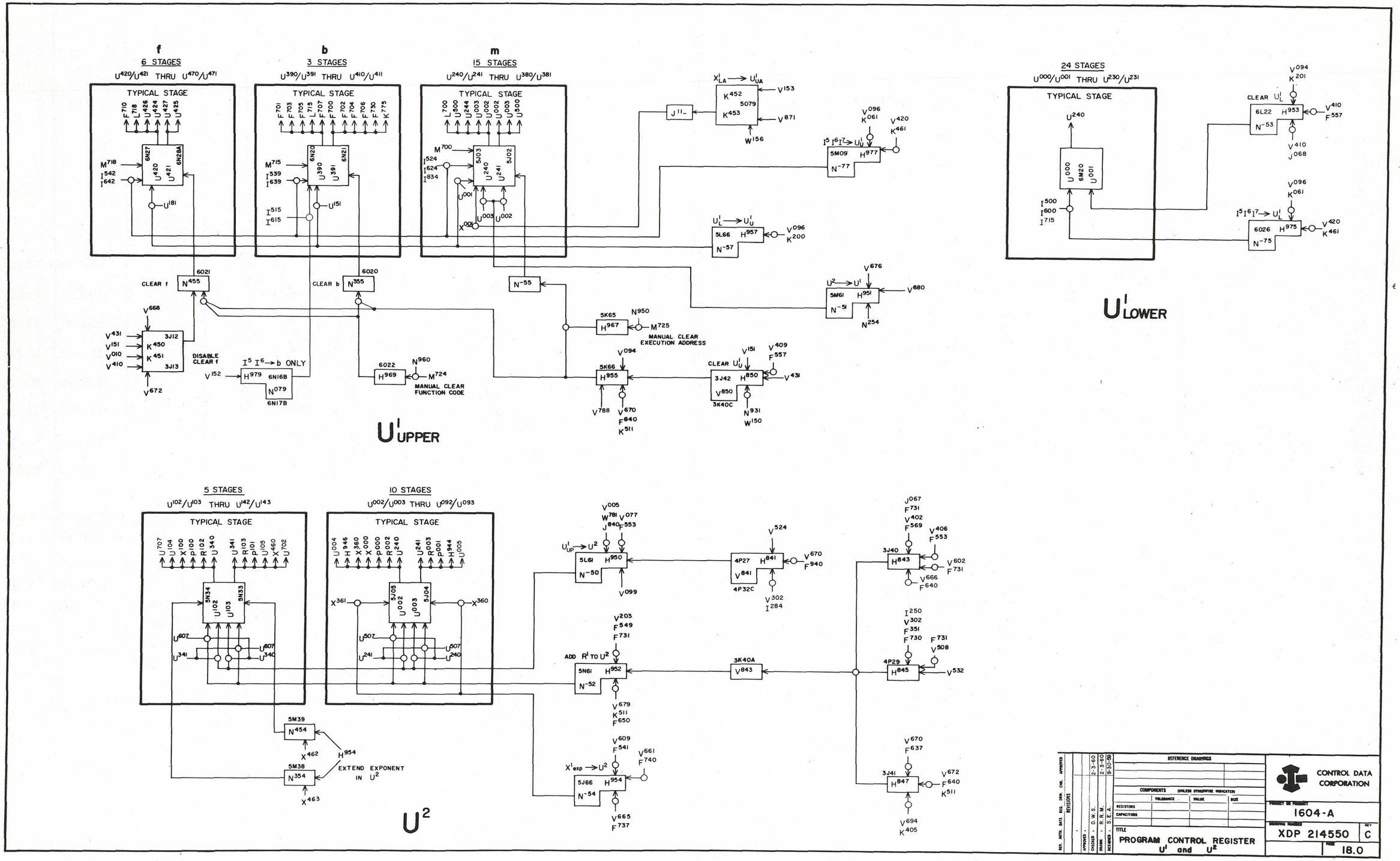

REV.	AUTH.	DATE	REQ.	DRW.	CHK.	APPROVED

REVISIONS

APPROVED		
CHECKED	D.W.S.	2-3-60
DRAWN	R.R.M.	2-3-60
DESIGNED	S.E.A.	9-30-59

REFERENCE DRAWINGS

COMPONENTS (UNLESS OTHERWISE INDICATED)

	TOLERANCE	VALUE	SIZE
RESISTORS			
CAPACITORS			

TITLE
PROGRAM CONTROL REGISTER
U' and U2

CONTROL DATA CORPORATION

PROJECT OR PRODUCT
1604-A

DRAWING NUMBER
XDP 214550

REV
C

PAGE
18.0

TERM	LOCATION	PAGE	QUAD.	DEFINITION
I715	1E06C	43	1	
I716	1E07C	43	1	
I717	1E08C	43	1	
I718	1E09C	43	1	
I719	1F07C	43	1	
I720	1F08C	43	1	
I865	6E01C	43	1	$I^7 \rightarrow U^1$ Inverters
I866	6E02C	43	0	
I867	6E03C	43	0	
I868	6E04C	43	0	
I869	6E05C	43	0	
I870	6E06C	43	0	
I871	6E07C	43	0	
I872	6E08C	43	0	
I873	6E09C	43	0	
N053	6L23B			Clear U_L^1
N075	6O27B			I^5, $I^6 \rightarrow U_L^1$
N153	6L24B			Clear U_L^1
N175	6O28B			I^5, $I^6 \rightarrow U_L^1$
N253	6L25B			Clear U_L^1
N275	6O29B			I^5, $I^6 \rightarrow U_L^1$
N353	6L26B			Clear U_L^1
N375	6O30B			I^5, $I^6 \rightarrow U_L^1$

TERM	LOCATION	PAGE	QUAD.	DEFINITION

REV. AUTH. DATE. BSS. DRW. CHK. APPROVED

REVISIONS

APPROVED -

CHECKED -

DRAWN - R. R. M. 9-27-62

DESIGNED -

REFERENCE DRAWINGS

COMPONENTS (UNLESS OTHERWISE INDICATED)			
	TOLERANCE	VALUE	SIZE
RESISTORS			
CAPACITORS			

TITLE

U1 LOWER

CONTROL DATA CORPORATION

PROJECT OR PRODUCT
1604-A

DRAWING NUMBER
XDP 214607 E

PAGE
18.1

TERM	LOCATION	PAGE	QUAD.	DEFINITION
J114	5080B			
J115	5081B			$X^1_{LA} \rightarrow U^2_{UA}$
J116	5082B			
N051	5K068			$U^2 \rightarrow U^1$
N055	5N16B			Clear U^1_{UA}
N057	5M21B			$U^1_L \rightarrow U^1_U$
N077	5J09B			$I^5, I^6 \rightarrow U^1_U$
N079	6N17B			$I^5, I^6 \rightarrow$ b only
N151	5L06B			$U^2 \rightarrow U^1$
N155	5O16B			Clear U^1_{UA}
N157	5N21B			$U^1_L \rightarrow U^1_U$
N177	5K09B			$I^5, I^6 \rightarrow U^1_U$
N251	5M06B			$U^2 \rightarrow U^1$
N255	5J21B			Clear U^1_{UA}
N257	5O21B			$U^1_L \rightarrow U^1_U$
N277	5L09B			$I^5, I^6 \rightarrow U^1_U$
N351	5N06B			$U^2 \rightarrow U^1$
N355	6O20B			Clear b
N357	6L20B			$U^1_L \rightarrow U^1_U$
N377	6O23B			$I^5, I^6 \rightarrow U^1_U$
N455	6O21B			Clear f
N457	6L21B			$U^1_L \rightarrow U^1_U$
N477	6O24B			$I^5, I^6 \rightarrow U^1_U$

TERM	LOCATION	PAGE	QUAD.	DEFINITION

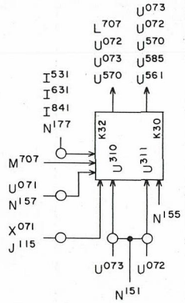

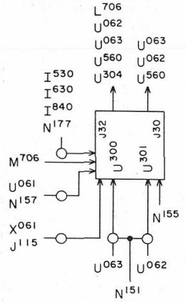

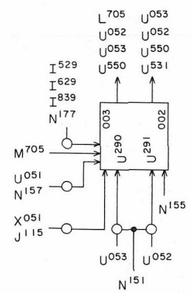

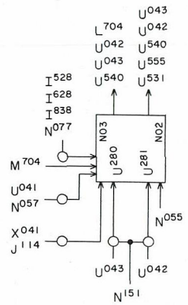

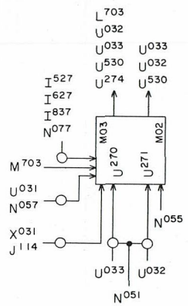

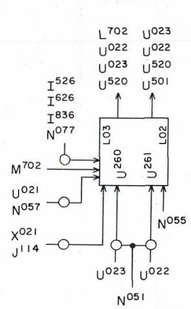

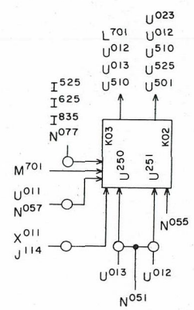

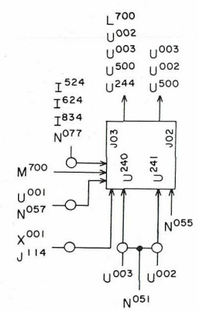

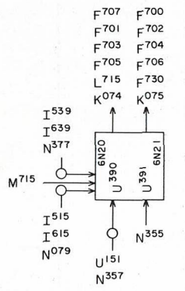

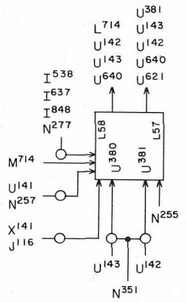

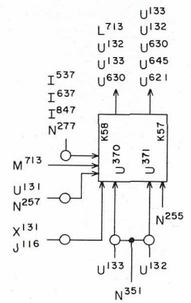

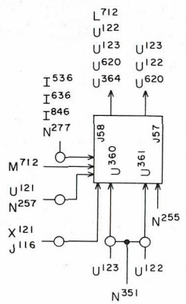

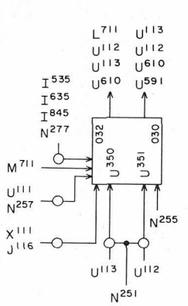

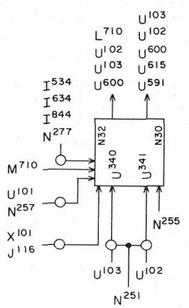

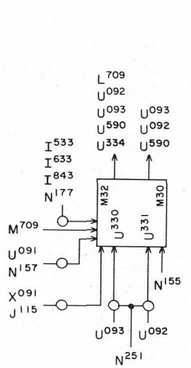

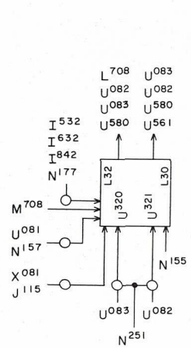

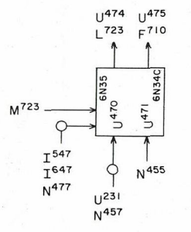

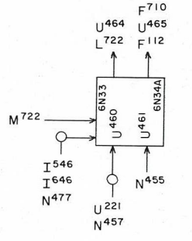

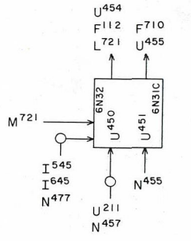

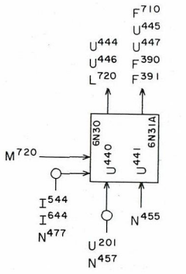

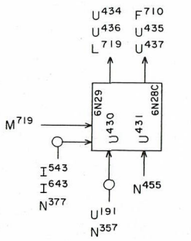

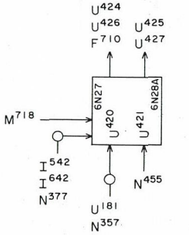

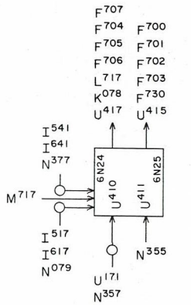

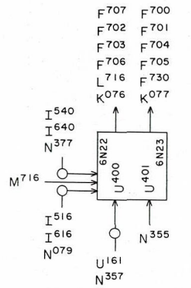

NOTE:
ALL JACKS ON CHASSIS 5
UNLESS OTHERWISE SHOWN.

REV.	AUTH.	DATE	REVISIONS	APPROVED	CHECKED	DRAWN	DESIGNED
		9-28-62				R. R. M	

REFERENCE DRAWINGS

COMPONENTS (UNLESS OTHERWISE INDICATED)	TOLERANCE	VALUE	SIZE
RESISTORS			
CAPACITORS			

TITLE

U1 UPPER

CONTROL DATA CORPORATION

PROJECT OR PRODUCT
1604-A

DRAWING NUMBER
XDP 214608

REV
E

PAGE
18.2

TERM	LOCATION	PAGE	QUAD.	DEFINITION
N050	5M01B			$U_U^1 \rightarrow U^2$
N052	5O06B			Add R^1 to U^2
N054	5K16B			$X_{exp}^1 \rightarrow U^2$
N150	5N01B			$U_U^1 \rightarrow U^2$
N152	5J11B			Add R^1 to U^2
N154	5L16B			$X_{exp}^1 \rightarrow U^2$
N250	5O01B			$U_U^1 \rightarrow U^2$
N252	5K11B			Add R^1 to U^2
N254	5M16B			$X_{exp}^1 \rightarrow U^2$
N350	5J06B			$U_U^1 \rightarrow U^2$
N352	5L11B			Add R^1 to U^2
N354	5M38B	18.0	2	Extend Exponent in U^2
N454	5M39B	18.0	2	

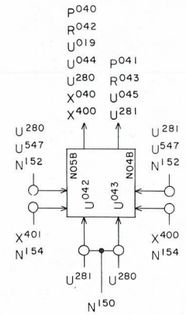

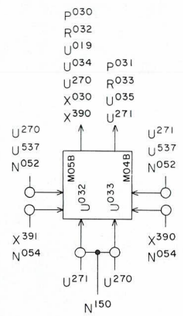

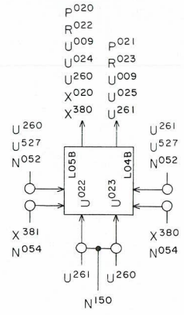

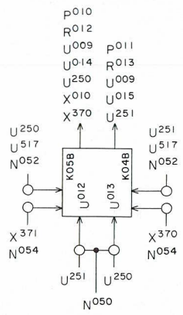

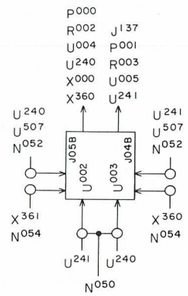

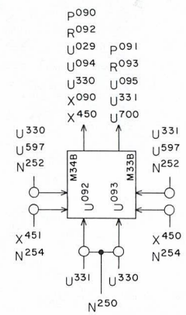

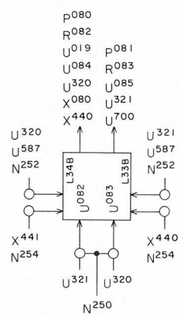

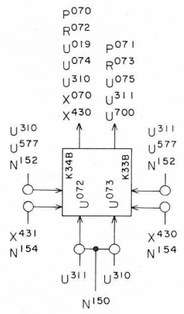

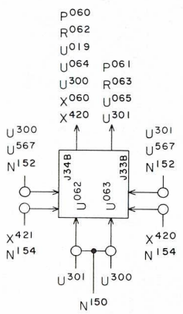

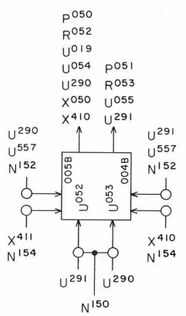

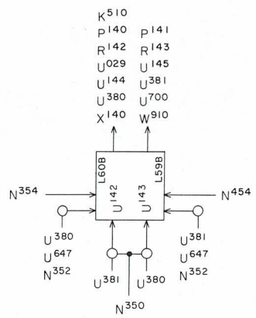

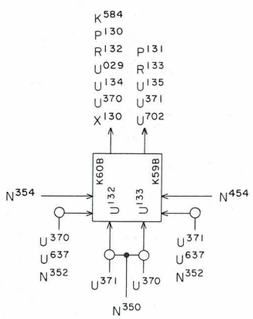

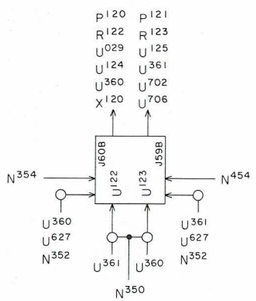

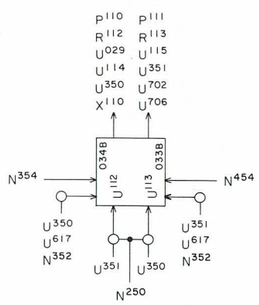

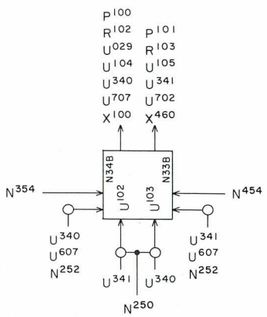

NOTE:
ALL JACK LOCATIONS ON CHASSIS 5
UNLESS OTHERWISE SHOWN.

REV.	AUTH.	DATE	REQ.	DRW.	CHK.	APPROVED
REVISIONS						
	-					

APPROVED -
CHECKED - 9-28-62
DRAWN - R.R.M. / T.A.W
DESIGNED -

REFERENCE DRAWINGS

COMPONENTS (UNLESS OTHERWISE INDICATED)

	TOLERANCE	VALUE	SIZE
RESISTORS			
CAPACITORS			

TITLE

U 2

CONTROL DATA CORPORATION

PROJECT OR PRODUCT
1604-A

DRAWING NUMBER
XDP 214609

REV

PAGE
18.3

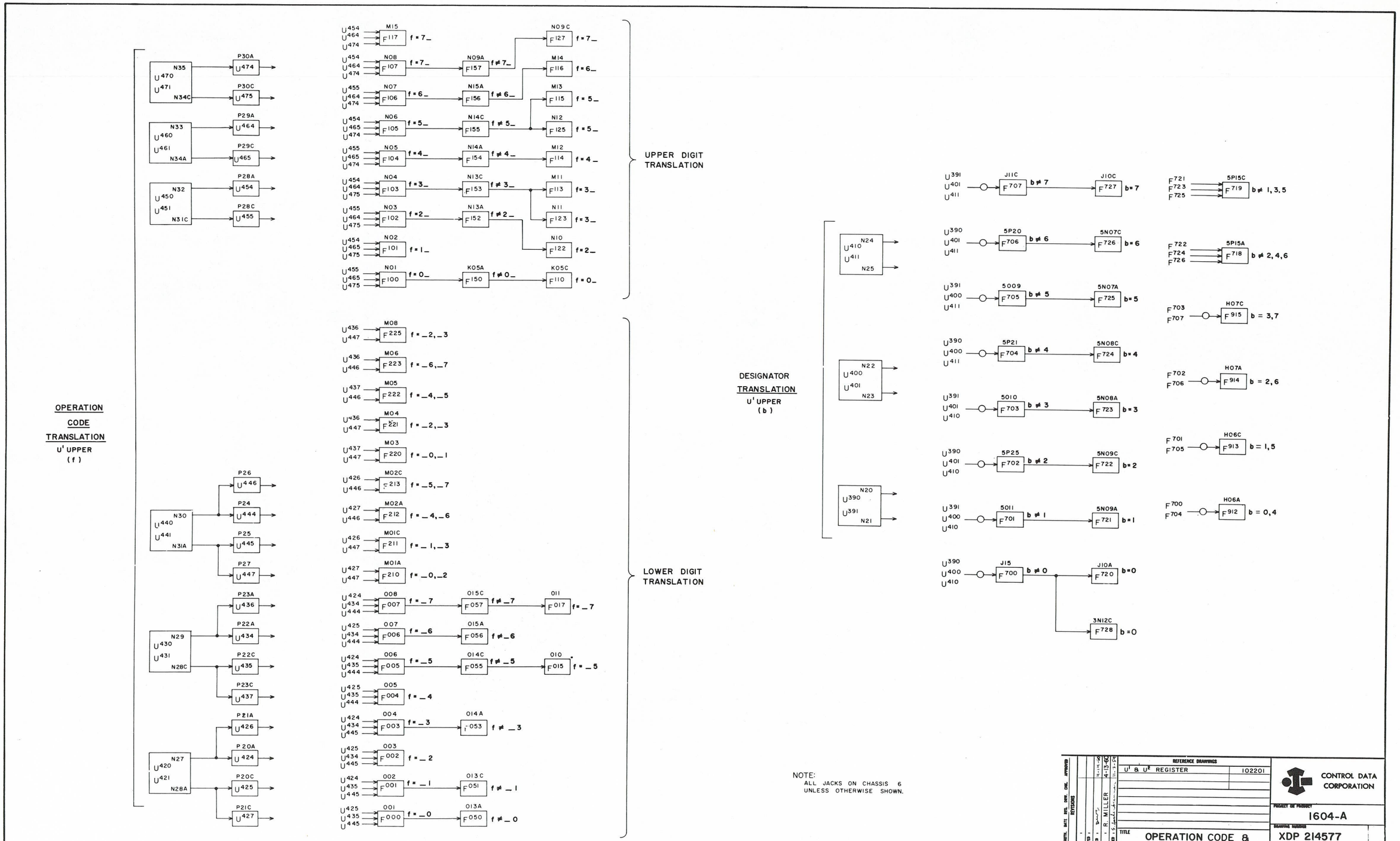
OPERATION CODE TRANSLATION
U' UPPER
(f)
UPPER DIGIT TRANSLATION
LOWER DIGIT TRANSLATION
DESIGNATOR TRANSLATION
U' UPPER
(b)
NOTE:
ALL JACKS ON CHASSIS 6 UNLESS OTHERWISE SHOWN.
REFERENCE DRAWINGS
U' & U² REGISTER
102201
CONTROL DATA CORPORATION
PROJECT OR PRODUCT
1604-A
DRAWING NUMBER
XDP 214577
TITLE
OPERATION CODE & DESIGNATOR TRANSLATION
PAGE
19.0

A997, F616 → 3K54A F610 (32)(X=A)

F663 → 3M17C F612 (32+33)(A=0)

F512 → 3M77A F613 24-27+30-33

F343, F437, F443 → 4K69A F614 37+43-46

F300, F350, F332, F454 → 3084 F615 01-07+34+35+50+51+54

F432 → 3K29B F616 32

F410, F404 → 3K28A F618 04+10

I296, F316, F371, F437, F444 → 4K69C F619 12+13+16+17+37 +44+72+73+ADV. CLOCK

F432, F324 → 3K28C F620 24+26+32

F325 → 6J80C F625 25+27

F390, F472 → 4M81A F626 72+(30-33)(A POS.)+ADV. CLOCK

F391, F473 → 4M81C F627 73+(30-33)(A NEG.)

F453 → 4K70A F628 53

F427 → 3K27C F630 27

F302, F332 → 3K26A F636 05+07+34+35

F900 → 3P29B F637 32+33

F000, F100, F007, F127 → 4K72A F639 $\overline{00+77}$

F901 → 3P28B F640 30+31

F902 → 3P27B F641 30-33

F392, F443 → 3M25A F650 (30+31)(U²SR=1)+33

F004, F304, F332 → 4M39A F652 06+07+35

F425 → 3K24C F653 25

F314, F315, F342 → 4K65C F656 12-17+40-42

J176 → 4M17C F657 X NEG.

F462, F463 → 4K74C F660 62+63

F215 → 4K63A F661 X5+X7

F214 → 4K63C F662 X4+X6

A986, F331 → 3L84C F663 (32+33)(A=0)

F310 → 3N13C F664 10+11

F462, K211, K203 → 4M78B F669 $\overline{\text{RO WAIT STOR. I+(62)(ST WAIT STOR.)}}$

F669, K208 → 3L80C F670 [RO WAIT STOR. I+(62)(ST WAIT STOR.)] +I+ AUX 3+ INDIRECT

A990, F661, A993, F662 → 4M39C F671 $\overline{(64+66)(X=A)+(65+67)(X>A)}$

F559, F317, F656 → 4K64A F672 $\overline{12+13+16+17+37+40-42}$

F639 → 4K72C F673 00+77

F475 → 6H04C F675 75

F348, K326 → 1J70A F676 05+34+37+NORMALIZE

F676 → 1J70C F677 $\overline{05+34+37+\text{NORMALIZE}}$

F349 → 1H83A F678 06

F678 → 1H83C F679 $\overline{06}$

F552 → 4J64C F680 $\overline{20+21+47}$

F112, U437, U446, F707 → 6K09C F681 (b=7)($\overline{22+23+74-77}$)

F117, U447

F681, J026 → 4N83A F682 (MODE SWITCH DOWN)+ (22+23+74-77)+(b≠7)

F589 → 3J01C F689 $\overline{01-07+(34)(A_{47}=A_{46})(A\neq 0)}$ $\overline{+(35)(AQ\neq 0)(A_{47}=A_{46})}$

NEXT ASSY.	USED ON	APPLICATION

REVISIONS			

APPROVED - J. [illegible] 3-15-63
CHECKED - J. [illegible]
DRAWN - J. MAN 12-10-62
DESIGNED - G. A. S.

REFERENCE DRAWINGS

COMPONENTS UNLESS OTHERWISE INDICATED	TOLERANCE	VALUE	SIZE
RESISTORS			
CAPACITORS			

TITLE
TRANSLATORS
F600 THRU F699

CONTROL DATA CORPORATION

PROJECT OR PRODUCT
1604-A

DRAWING NUMBER
XDP 214624

PAGE
19.5

U390 U400 U410 → 6J15B F700 b≠0

U391 U400 U410 → 5011B F701 b≠1

U390 U401 U410 → 5P25B F702 b≠2

U391 U401 U410 → 5010B F703 b≠3

U390 U400 U411 → 5P21B F704 b≠4

U391 U400 U411 → 5009B F705 b≠5

U390 U401 U411 → 5P20B F706 b≠6

U391 U401 U411 → 6J11B F707 b≠7

U421 U430 U440 U450 U460 U470 → 6J12B F710 76

J023 F700 F704 → 6J13A F711 (b=0+4)+(b=1+5)(STOP KEY 1)

F700 F701 F704 F705 →

J024 J025 → 6J14B F712 (b=2+6)(STOP KEY 2)+ (b=3+7)(STOP KEY 3)

F702 F703 F706 F707 →

F703 F707 J024 →

F702 F706 J025 →

F718 F719 → 4N39B F717 b=1-6

F722 F724 F726 → 5P15A F718 b≠2,4,6

F721 F723 F725 → 5P15C F719 b≠1,3,5

F700 → 6J10A F720 b=0

F701 → 5N09A F721 b=1

F702 → 5N09C F722 b=2

F703 → 5N08A F723 b=3

F704 → 5N08C F724 b=4

F705 → 5N07A F725 b=5

F706 → 5N07C F726 b=6

F707 → 6J10C F727 b=7

F700 → 3N12C F728 b=0

U390 U400 U410 → 4K65A F730 b≠0

F728 → 3N12A F731 b≠0

F900 → 3P26B F737 32+33

F901 → 3P25B F740 30+31

F902 → 3P24B F741 30-33

F001 F112 → 6L16B F821 $\overline{21}$

F900 → 3P23B F837 32+33

F901 → 3P22B F840 30+31

F353 → 4J74A F853 56+57

F537 → 3P17A F900 $\overline{32+33}$

F540 → 3P17C F901 $\overline{30+31}$

F541 → 3P16A F902 $\overline{30-33}$

F424 F425 F426 F427 → 3M28C F903 24-27

F675 F912 →

F675 F913 J020 → 6H05A F910 NO SELECTIVE JUMP

F675 F914 J021 →

F675 F915 J022 →

F516 F912 Q987 →

F516 F913 Q986 → 6H05C F911 $\overline{[23(b=0+4)(Q=0)]+[23(b=1+5)(Q\neq0)]+[23(b=2+6)(Q\ POS.)]+[23(b=3+7)(Q\ NEG.)]}$

F516 F914 W772 →

F516 F915 W773 →

F700 F704 → 6H06A F912 b=0+4

F701 F705 → 6H06C F913 b=1+5

F702 F706 → 6H07A F914 b=2+6

F703 F707 → 6H07C F915 b=3+7

A987 F528 F912 →

A986 F528 F913 → 6H10A F916 $\overline{[22(b=0+4)(A=0)]+[22(b=1+5)(A\neq0)]+[22(b=2+6)(A\ POS.)]+[22(b=3+7)(A\ NEG.)]}$

F528 F914 W770 →

F528 F915 W771 →

F901 → 3P21B F940 30+31

KEY, ASTR, SEQ, ENV, ENC, APPROVED					
REVISIONS	-	-	3/16/63	3-16-63	12-10-62
CHECKED					
DRAWN	J. MAN				
DESIGNED	J. G. A. S.				

REFERENCE DRAWINGS

COMPONENTS (UNLESS OTHERWISE INDICATED)

	TOLERANCE	VALUE	SIZE
RESISTORS			
CAPACITORS			

TITLE: TRANSLATORS F700 THRU F999

CONTROL DATA CORPORATION

PROJECT OR PROGRAM: 1604-A

DRAWING NUMBER: XDP 214625 H

PAGE 19.6

TERM	LOCATION	PAGE	QUAD.	DEFINITION
F440	3M09A	19.3	0	30 + 31
F550	3N79B	19.4	1	54
F837	3P23B	19.6	1	32 +33
N941	4M74C			Odd Clock Slave
V095	4K05C	5	0	RNI Seq.
V153	4O84C	5	1	
V201	3K58	7	0	ZA Seq.
V406	3M59C	9	2	WO Seq.
V673	3O62	13	2	Iterative Seq. (Ex. Floating Point)
V669	3O59A	13	1	
V680	3O74	14	0	Iterative Seq. (Round, Normalize, Final Ass'y)
W144	4K78	25	1	Internal M.C.

TERM	LOCATION	PAGE	QUAD.	DEFINITION

BIT TOGGLE CONTROL

BIT NO–BORROW INPUT

STAGE BORROW INPUT

GROUP BORROW INPUT

SECTION BORROW INPUT (U^{593}, U^{503})

SECTION BORROW GENERATION (U^{592}, U^{502})

SECTION BORROW ENABLE (U^{602}, U^{512})

GROUP BORROW GENERATION

GROUP BORROW ENABLE

STAGE BORROW ENABLE

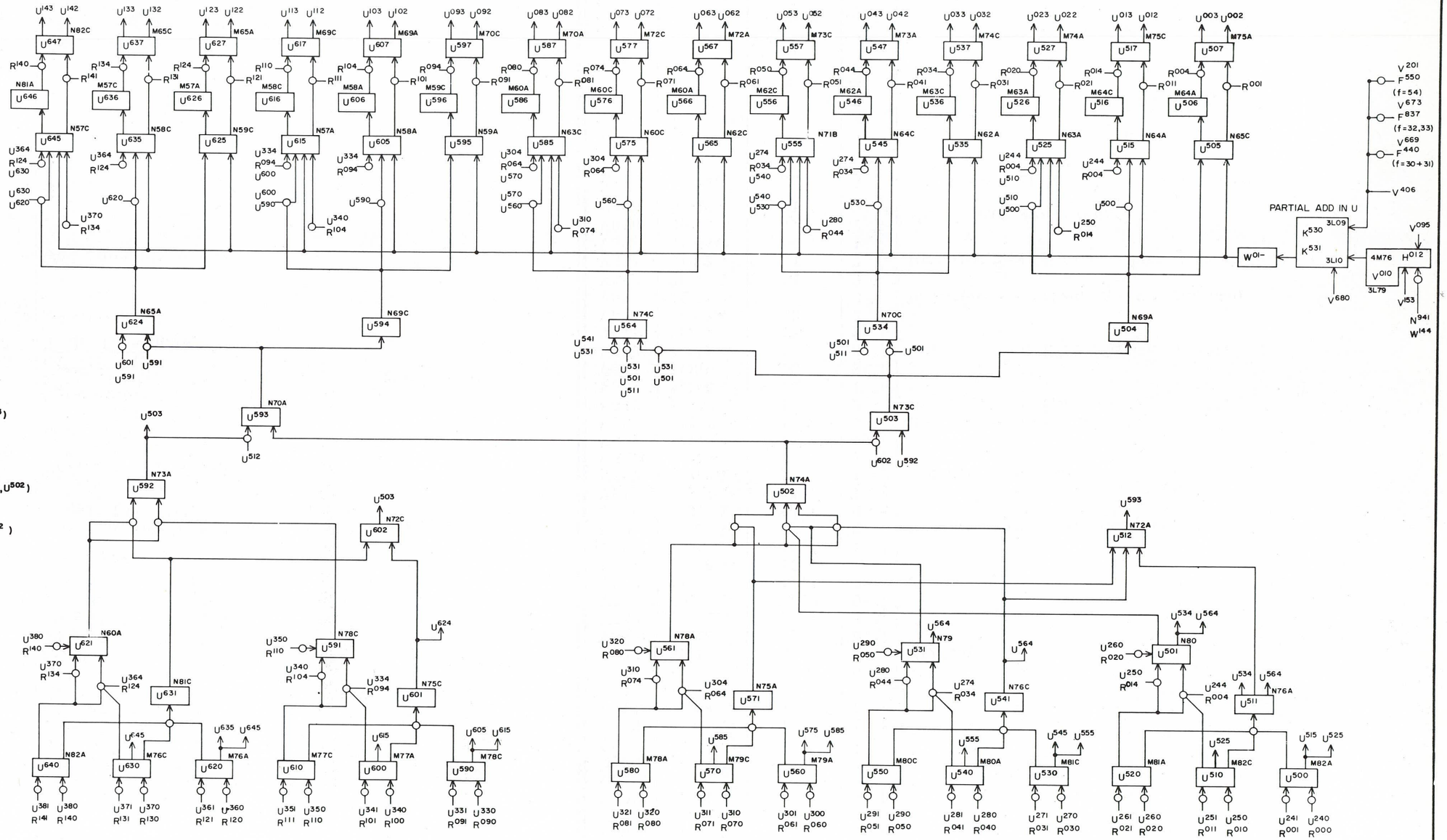

NOTE:

1. — JACK ASSIGNMENTS THAT DO NOT DESIGNATE A CHASSIS REFER TO CHASSIS NO. 5.

REV.	AUTH.	DATE	REG.	DRW.	CHK.	APPROVED
REVISIONS						

TERM	LOCATION	PAGE	QUAD.	DEFINITION
F404	3M20B	19.3	0	$\overline{04}$
F432	3M25C	19.3	0	$\overline{32}$
F455	3M28A	19.3	1	$\overline{55}$
F503	4M09C	19.4	0	52 + 53
F537	3N83B	19.4	2	32 + 33
F540	3N81B	19.4	2	30 + 31
F541	3N80B	19.4	2	30 - 33
F550	3N79B	19.4	1	54
F554	4N04A	19.4	1	54 + 55 + 62 - 67
F555	3O82B	19.4	1	24 - 27
F571	3O78C	19.4	1	01 - 07 + 34 + 35
F573	3O77B	19.4	1	55
F587	3J55B	19.4	3	27 + 33
F615	3O84	19.5	0	01 - 07 + 34 + 35 + 50 + 51 + 54
F616	3K29B	19.5	0	32
F640	3P28B	19.5	0	30 + 31
F730	4K65A	19.6	0	b ≠ 0
F737	3P26B	19.6	2	32 + 33
F740	3P25B	19.6	2	30 + 31
F741	3P24B	19.6	2	30 - 33
F940	3P21B	19.6	3	30 + 31
H552	4I10A	10.2	2	S & T Seq.
J691	5L10C	10.2	3	Interrupt or Clock Request During 63 (I)
J840	4N04C	28	1	Stop II FF = "1"
K051	4L08B	28	1	$\underline{\text{Stop II}}$
K208	3O31A	11	0	$\overline{\text{Iterative Wait Storage}}$
K311	3L31C	51	0	A Right Shift
K313	3L30C	51	0	Q Right Shift
K315	3L28B	51	2	A Left Shift
K317	3L27B	51	2	Q Left Shift
K453	5O79C	18	1	$\underline{X^1LA \rightarrow U^1UA}$
K472	3L75B	7	3	$\overline{04 + 10 + 11}$
K476	3M38B	51	1	Scale Terminate
K510	3K13A	13	1, 3	U^2 SR FF
K511	3K14B	13	1, 3	
N931	3J76C			Odd Clock Slave
N933	3L20C			
N959	5P35B			
N991	3M09C			

TERM	LOCATION	PAGE	QUAD.	DEFINITION
V002	4J03	5	3	Execute Instruction
V005	4K02C	28	1	Manual Control
V008	4J06	28	0	
V010	3L79	25, 5	1, 2	Clear Control FF
V098	4K08A	5	1	RNI Seq.
V154	4O43C	5	1	
V202	3K59A	7	0	Zero Address Seq.
V203	3K60	7	0	
V205	3K61	7	0	
V206	3K62	7	2	
V207	3K63	7	0	
V208	3K65C	7	1	
V210	3K65A	7	1	
V211	3K68	7	3	
V213	3K70	7	1	
V304	4K22	8.0	0	RO Seq.
V344	4K46	8.1	0	
V346	4K48	8.1	0	
V503	4M21A	10.0	0	S & T Seq.
V527	4M34C	10.1	0	
V552	4I10A	10.2	2	
V553	5L39A	10.2	2	
V560	4M30A	10.0	1	
V590	3O02A	13	2	Iterative Seq. (Ex. Floating Point)
V606	3O23A	11	0	Iterative Seq. (Main)
V611	3O27	11	1	
V612	3O28A	11	1	
V613	3O29	11	1	
V621	3O34	11	2	
V637	3M40	12	0	Iterative Seq. (Multiply)
V647	3M54	12	3	Iterative Seq. (Divide)
V668	3O58	13	1	Iterative Seq. (Ex. Floating Point)
V671	3O59	13	2	
V672	3O61	13	2	
V673	3O62	13	2	
V674	3O63A	13	2	
V676	3O71	15	3	Iterative Seq. (End Sign Correction)
V678	3O73A	14	0	Iterative Seq. (Round, Norm., Final Ass'y)
V681	3P32	14	0	
V698	3P44C	14	1	
V886	3K48	51	2	Shift Instruction Control
V888	3K49	51	2	
W781	4P14C	60	3	No Buffer Active

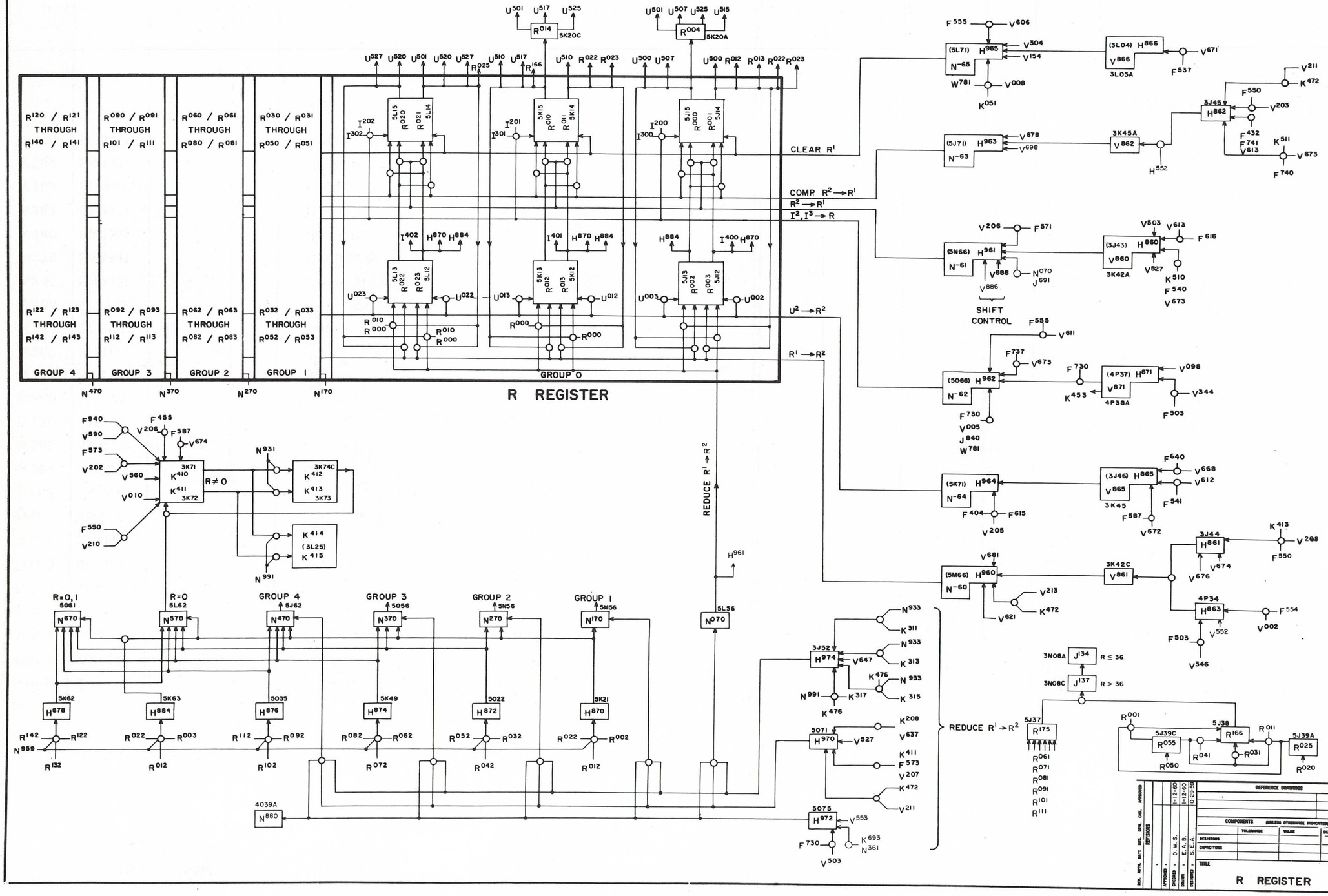
R REGISTER
GROUP 4
GROUP 3
GROUP 2
GROUP 1
GROUP 0
CLEAR R¹
COMP R² → R¹
R² → R¹
I², I³ → R
U² → R²
R¹ → R²
REDUCE R¹ → R²
SHIFT CONTROL
R=0,1
R=0
REDUCE R¹ → R²
R ≤ 36
R > 36
CONTROL DATA CORPORATION
1604-A
XDP 214551
REV F
PAGE 21.0
R REGISTER

TERM	LOCATION	PAGE	QUAD.	DEFINITION
H872	5O22	21	2	Reduce R Logic
H874	5K49	21	2	
H876	5O35	21	2	
H878	5K62	21	2	
N060	5K23B			$R^1 \rightarrow R^2$
N061	5O23B			$R^2 \rightarrow R^1$
N062	5M31B			$I^2, I^3 \rightarrow R$
N063	5J36B			Comp. $R^2 \rightarrow R^1$
N064	5N36B			$U^2 \rightarrow R^1$
N065	5L41B			Clear R^1
N160	5L23B			$R^1 \rightarrow R^2$
N161	5J31B			$R^2 \rightarrow R^1$
N162	5N31B			$I^2, I^3 \rightarrow R$
N163	5K36B			Comp. $R^2 \rightarrow R^1$
N164	5O36B			$U^2 \rightarrow R^2$
N165	5M41B			Clear R^1
N170	5M56B			Reduce R
N260	5M23B			$R^1 \rightarrow R^2$
N261	5K31B			$R^2 \rightarrow R^1$
N262	5O31B			$I^2, I^3 \rightarrow R$
N263	5L36B			Comp. $R^2 \rightarrow R^1$
N264	5J41B			$U^2 \rightarrow R^2$
N265	5N41B			Clear R^1
N270	5N56B			Reduce R
N360	5N23B			$R^1 \rightarrow R^2$
N361	5L31B			$R^2 \rightarrow R^1$
N363	5M36B			Comp. $R^2 \rightarrow R^1$
N364	5K41B			$U^2 \rightarrow R^2$
N370	5O56B			Reduce R

TERM	LOCATION	PAGE	QUAD.	DEFINITION
R166	5J38	21	3	R > 36 Translator
R175	5J37	21	3	

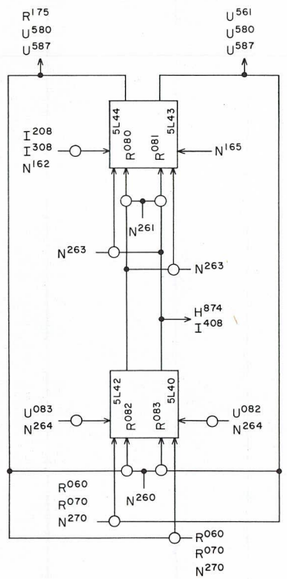

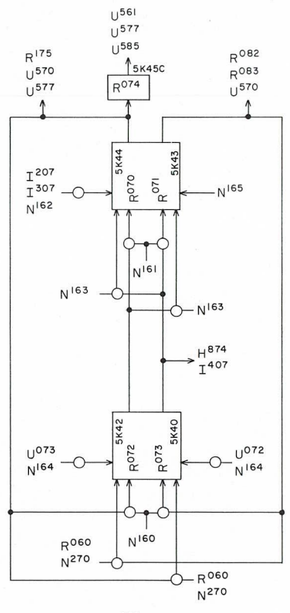

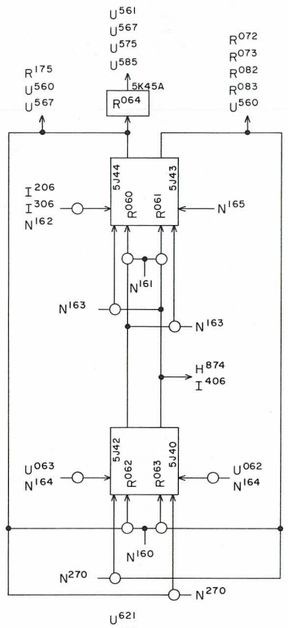

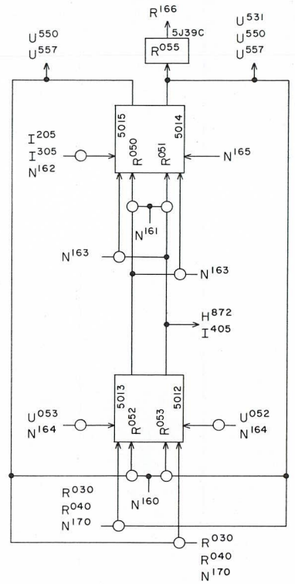

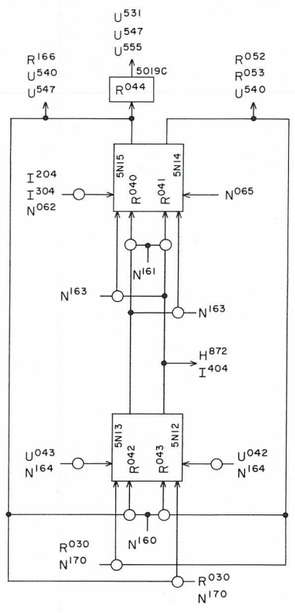

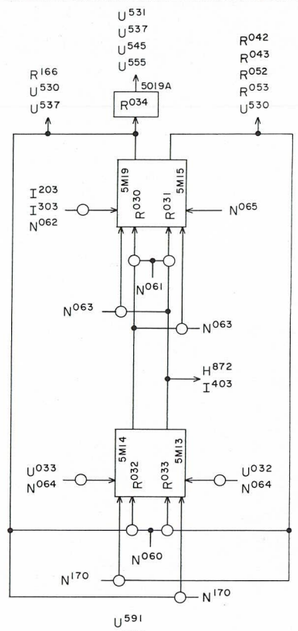

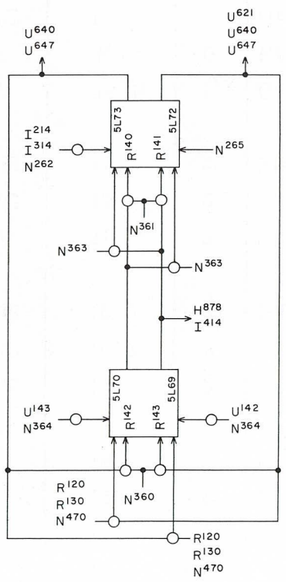

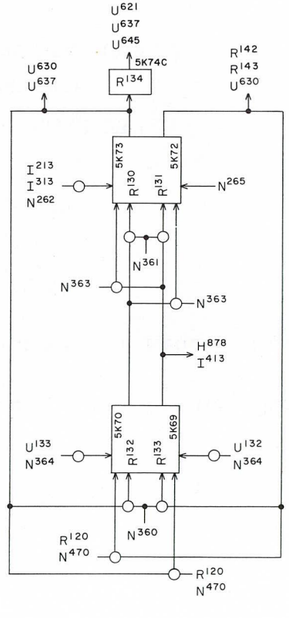

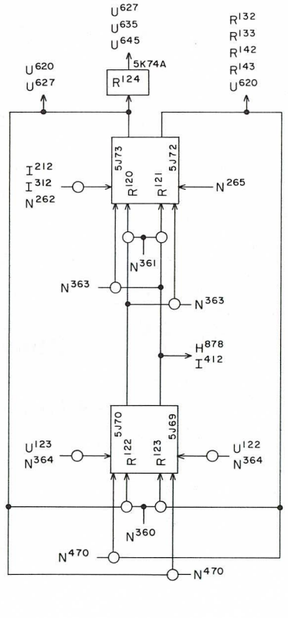

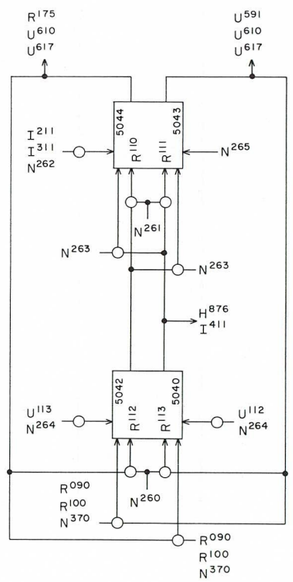

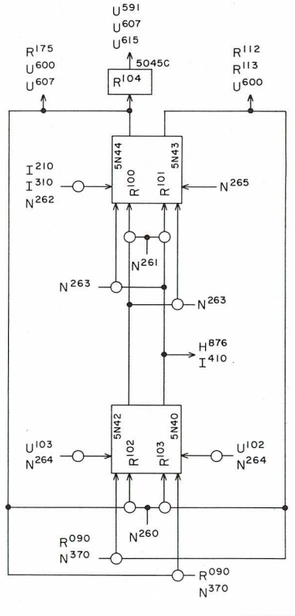

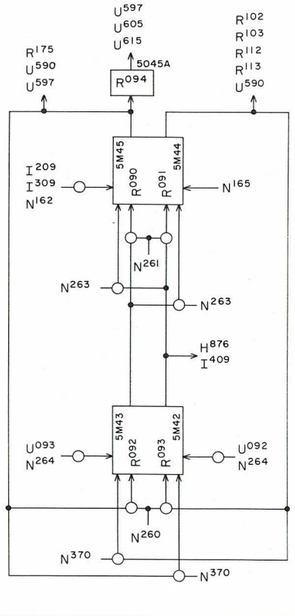

REV.	AUTH.	DATE	BEG.	CHK.	CHG.	APPROVED
REVISIONS						
						9-19-62

APPROVED ,
CHECKED ,
DRAWN R. R. M.
DESIGNED ,

REFERENCE DRAWINGS

COMPONENTS (UNLESS OTHERWISE INDICATED)

	TOLERANCE	VALUE	SIZE
RESISTORS			
CAPACITORS			

TITLE

R REGISTER
BITS 03 THRU 14

CONTROL DATA CORPORATION

PROJECT OR PRODUCT
1604-A

DRAWING NUMBER
XDP 214605

REV

PAGE
21.1

TERM	LOCATION	PAGE	QUAD.	DEFINITION
F433	3M26A	19.3	0	$\overline{33}$
F701	5O11	19	3	$\overline{b = 1}$
F702	5P25	19	3	$\overline{b = 2}$
F703	5O10	19	3	$\overline{b = 3}$
F704	5P21	19	1	$\overline{b = 4}$
F705	5O09	19	1	$\overline{b = 5}$
F706	5P20	19	1	$\overline{b = 6}$
K690	4L63A	10.2	3	Interrupt + Clock Request During 63 (I) FF
K691	4L63C	10.2	3	
K693	4N68C	10.2	3	Interrupt + Clock Request During 63(II)
U426	6P21A	19	2	Slave of U^{42}
U437	6P23C	19	2	Slave of U^{43}
U445	6P25B	19	2	Slave of U^{44}
V012	4M77	25,5	1,2	Clear Control FF's
V343	4K46	8.1	0	RO Sequence
V608	3O36C	11	1	Iterative Seq. (Main)

TERM	LOCATION	PAGE	QUAD.	DEFINITION

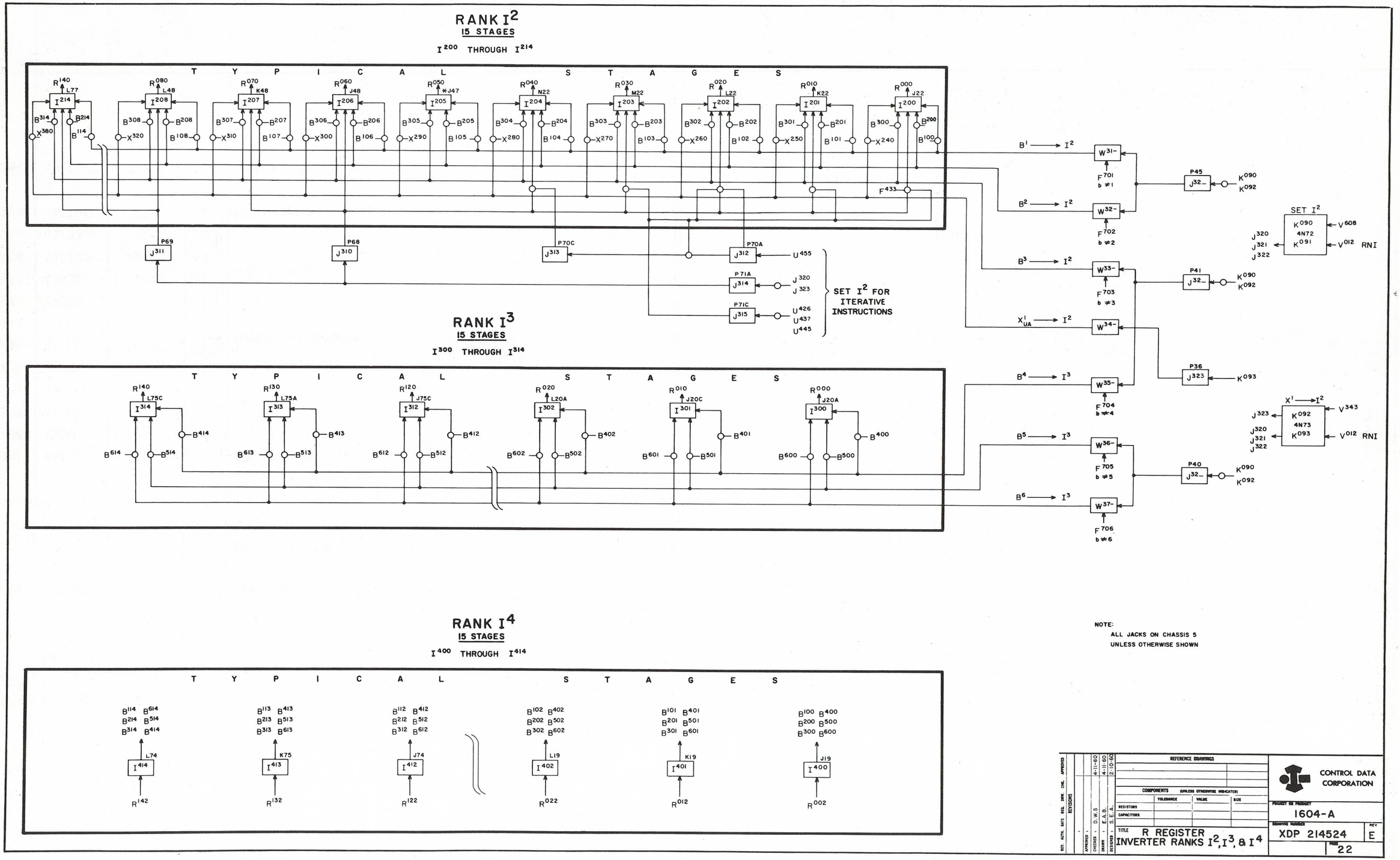
RANK I2
15 STAGES
I200 THROUGH I214
TYPICAL STAGES
SET I2 FOR ITERATIVE INSTRUCTIONS
RANK I3
15 STAGES
I300 THROUGH I314
TYPICAL STAGES
RANK I4
15 STAGES
I400 THROUGH I414
TYPICAL STAGES
SET I2
RNI
NOTE:
ALL JACKS ON CHASSIS 5
UNLESS OTHERWISE SHOWN
REFERENCE DRAWINGS
COMPONENTS (UNLESS OTHERWISE INDICATED)
TOLERANCE
VALUE
SIZE
RESISTORS
CAPACITORS
TITLE R REGISTER INVERTER RANKS I2, I3, & I4
CONTROL DATA CORPORATION
PROJECT OR PRODUCT 1604-A
DRAWING NUMBER XDP 214524
REV E
PAGE 22

TERM	LOCATION	PAGE	QUAD.	DEFINITION
F503	4M09C	19.4	0	52 + 53
F573	3O77B	19.4	1	55
F594	3K55C	19.4	3	34 + 35 + 50 + 51 + 54 + 55
F721	5N09A	19.6	3	b = 1
F722	5N09C	19.6	3	b = 2
F723	5N08A	19.6	3	b = 3
F724	5N08C	19.6	1	b = 4
F725	5N07A	19.6	1	b = 5
F726	5N07C	19.6	1	b = 6
K693	4N68C	10.2	3	Interrupt + Clock Request During 63 (II)
M8__				Manual Set Buttons on Console
N880	4O39A	10.2	3	S & T Seq.
V012	4M77	25, 5	1,2	Clear Control FF
V205	3K61	7	0	ZA Seq.
V207	3K63	7	0	
V208	3K65C	7	1	
V214	3K51C	7	1	
V340	4K41	8.0	1	Read Operand Seq.
V342	4K43	8.1	0	
V521	4M29	10.0	1	S & T Seq.
V523	4M31	10.0	1	
V524	4M32A	10.1	0	
V526	4M34A	10.1	0	
V790	4M79C	33	0	Interrupt Seq.
W144	4K78	25	1	Internal M.C.

TERM	LOCATION	PAGE	QUAD.	DEFINITION

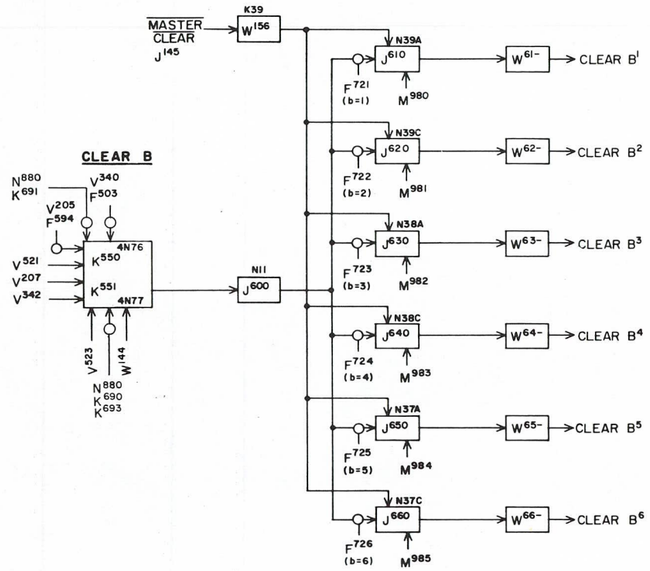

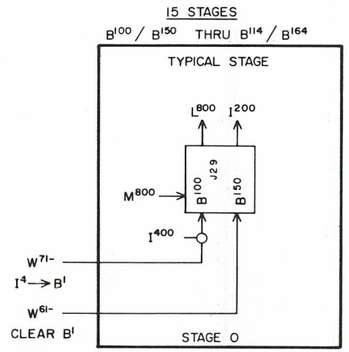

B1

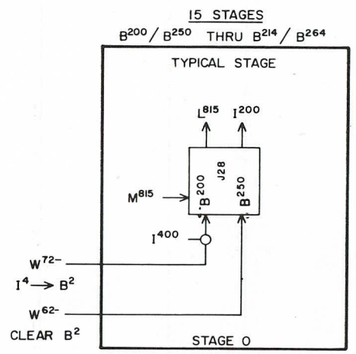

B2

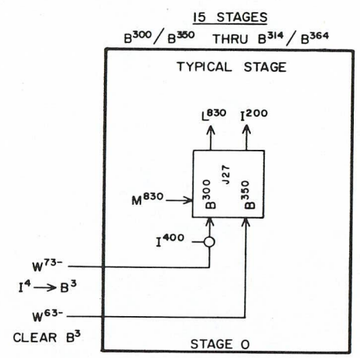

B3

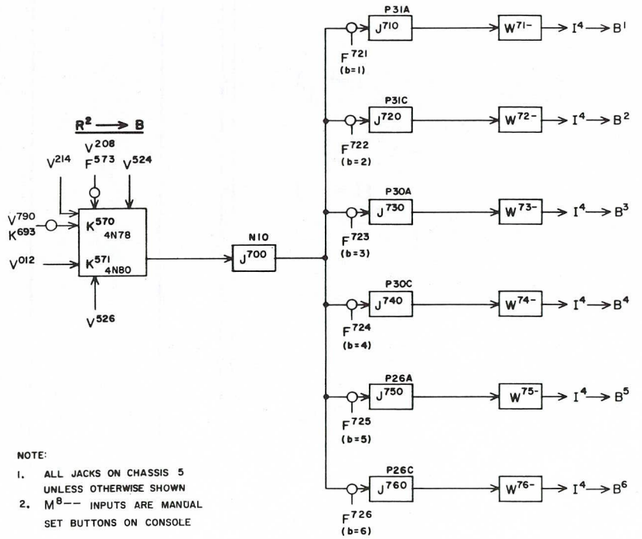

NOTE:

1. ALL JACKS ON CHASSIS 5 UNLESS OTHERWISE SHOWN
2. M^{8}-- INPUTS ARE MANUAL SET BUTTONS ON CONSOLE

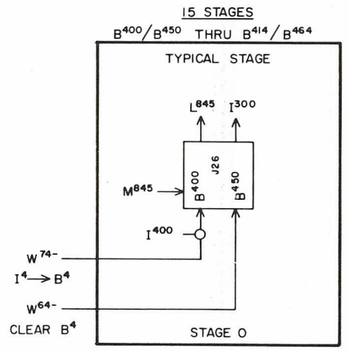

B4

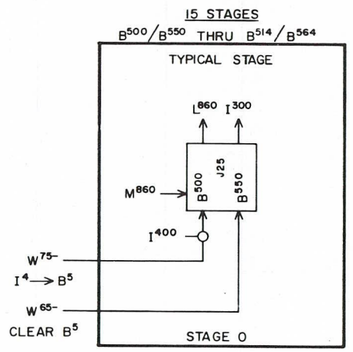

B5

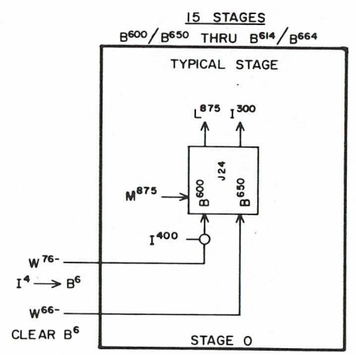

B6

REV.	AUTH.	DATE	REVISIONS	DRW.	CHK.	APPROVED
-						

APPROVED -
CHECKED - D.W.S. 2-25-60
DRAWN - R.R.M. 2-25-60
DESIGNED - S.E.A. 12-21-59

REFERENCE DRAWINGS

COMPONENTS (UNLESS OTHERWISE INDICATED)

	TOLERANCE	VALUE	SIZE
RESISTORS			
CAPACITORS			

TITLE
LOGIC DIAGRAM
B REGISTERS

CONTROL DATA CORPORATION

PROJECT OR PROGRAM
1604-A

DRAWING NUMBER
XDP 214523

REV.
B

PAGE
23.0

TERM	LOCATION	PAGE	QUAD.	DEFINITION
W610	5P44A			
W611	5P43A			Clear B^1
W612	5P42A			
W620	5P39A			
W621	5P38A			Clear B^2
W622	5P37A			
W630	5P34A			
W631	5P33A			Clear B^3
W632	5P32A			
W710	5P44C			
W711	5P43C			$I^4 \rightarrow B^1$
W712	5P42C			
W720	5P39C			
W721	5P38C			$I^4 \rightarrow B^2$
W722	5P37C			
W730	5P34C			
W731	5P33C			$I^4 \rightarrow B^3$
W732	5P32C			

TERM	LOCATION	PAGE	QUAD.	DEFINITION



NOTE:
ALL JACK LOCATIONS ON CHASSIS 5
UNLESS OTHERWISE SHOWN.

REFERENCE DRAWINGS	
COMPONENTS (UNLESS OTHERWISE INDICATED)	
TOLERANCE / VALUE / SIZE	
RESISTORS	
CAPACITORS	
TITLE	INDEX REGISTERS B^1, B^2, & B^3
CONTROL DATA CORPORATION	
PROJECT OR PRODUCT	1604-A
DRAWING NUMBER	XDP 214610 E
PAGE	23.1
DRAWN	R. R. M. 9-26-62

TERM	LOCATION	PAGE	QUAD.	DEFINITION
W640	5P29A			
W641	5P28A			Clear B^4
W642	5P27A			
W650	5P24A			
W651	5P23A			Clear B^5
W652	5P22A			
W660	5P19A			
W661	5P17A			Clear B^6
W662	5P16A			
W740	5P29C			
W741	5P28C			$I^4 \rightarrow B^4$
W742	5P27C			
W750	5P24C			
W751	5P23C			$I^4 \rightarrow B^5$
W752	5P22C			
W760	5P19C			
W761	5P17C			$I^4 \rightarrow B^6$
W762	5P16C			

TERM	LOCATION	PAGE	QUAD.	DEFINITION

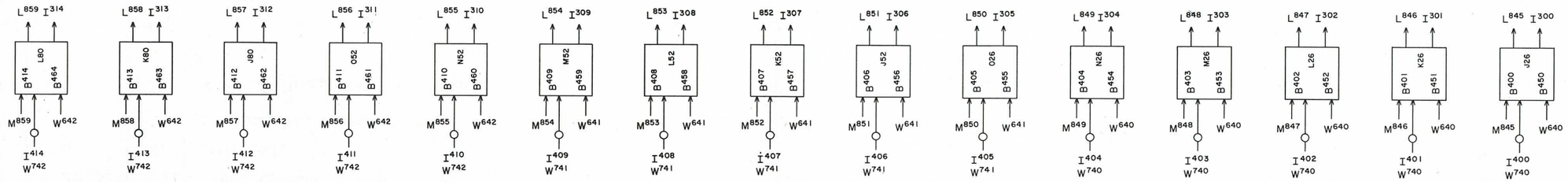

B4

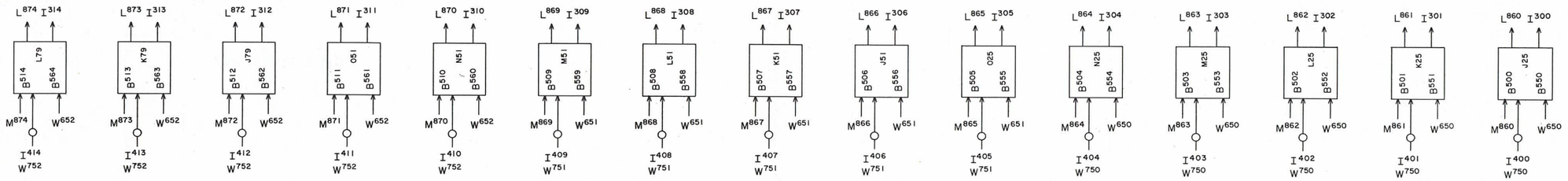

B5

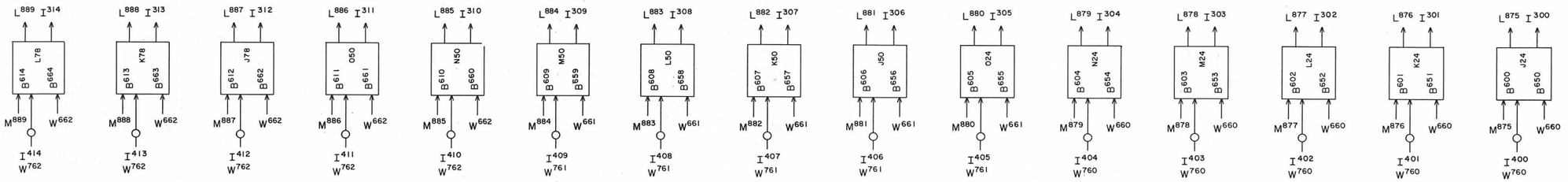

B6

NOTE:
ALL JACK LOCATIONS ON CHASSIS 5
UNLESS OTHERWISE SHOWN.

REV.	AUTH.	DATE	REG.	ENG.	CONT.	APPROVED
REVISIONS						
						9-26-62

APPROVED
CHECKED
DRAWN I. R. R. M.
DESIGNED

REFERENCE DRAWINGS

COMPONENTS (UNLESS OTHERWISE INDICATED)

	TOLERANCE	VALUE	SIZE
RESISTORS			
CAPACITORS			

TITLE
INDEX REGISTERS
B4, B5, & B6

CONTROL DATA CORPORATION

PROJECT OR PRODUCT
1604-A

DRAWING NUMBER
XDP 214611

REV
A

TERM	LOCATION	PAGE	QUAD.	DEFINITION
F557	3O81B	19.4		22 + 23 + 75 + 76
F573	3O77B	19.4		55
F582	3M83C	19.4		76
I254	6N83A	33	2	$\overline{\text{External Interrupt}}$
I270	6K75A	32	3	Interrupt Address Register
I272	6K76A	32	3	
I274	6K77A	32	3	
J050	3L21	6	0	Jump
J066	4N54	33	2	Interrupt
J068	6H83	33	2	Interrupt
K060	4K16B	5	0	Exit FF Clear
K411	3K72B	21	2	R ≠ 0
L751	6I80B			
L752	6I80C			
M993	2D04A	28	3	Mode Switch $\overline{\text{Up}}$
N909	6L38B			Odd Clock Slave
N961	6J17B			
S010	3D79	56.0	3	S^1 Register
S020	3D81	56.0	3	
V010	3L79	25,5	1,2	Clear Control FF's
V033	4M02	5	0	Full Exit
V102	3L83C	6	1	Normal Jump Sequence
V103	3L84A	6	1	Normal Jump Sequence
V205	3K61	7	0	ZA Seq.
V401	3M56A	9	0	WO Seq.
V405	3M59A	9	0	
V409	3M62	9	3	
W149	3J07C	25	2	Internal M.C.

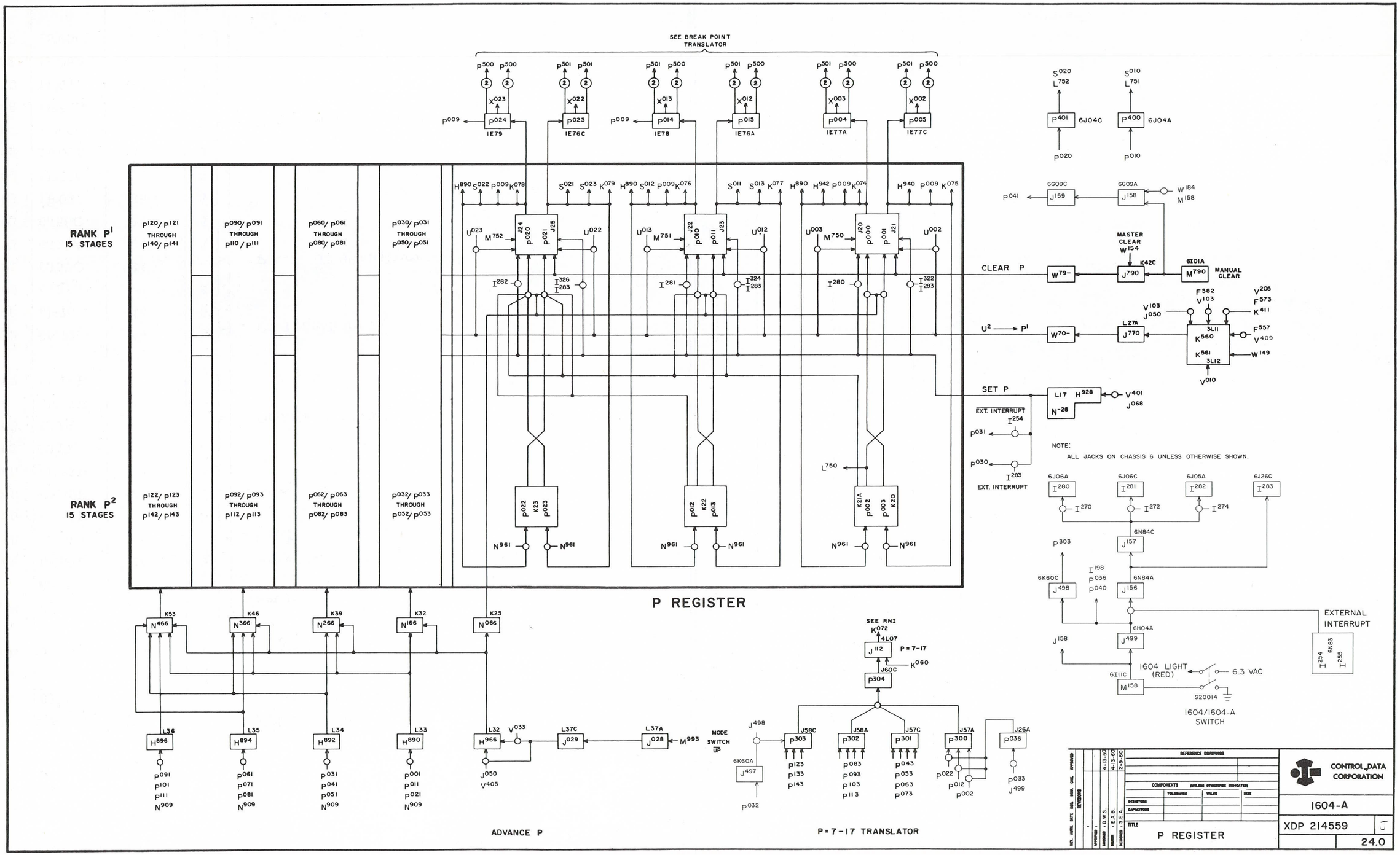

CONTROL DATA CORPORATION	
1604-A	
XDP 214559	C1
24.0	

P REGISTER

TERM	LOCATION	PAGE	QUAD.	DEFINITION
H892	6L34	24	2	
H894	6L35	24	2	Advance P Logic
H896	6L36	24	2	
I254	6N83A	33	2	$\overline{\text{External Interrupt}}$
I283	6J26C	33	2	External Interrupt
M790	6I01A	24	1	Manual Clear P
N028	6J54B			Set P
N128	6J55B			
N166	6K32B	24	2	Advance P
N228	6J56B			Set P
N266	6K39B	24	2	
N366	6K46B	24	2	Advance P
N466	6K53B	24	2	
N961	6J17B			
N963	6J16B			Odd Clock Slaves
N965	6K17B			
N967	6K16B			
P019	6N79	44	0	P^1 Translator
P029	6N78	44	0	
P300	6J57A	24	3	
P301	6J57C	24	3	P = 7 - 17 Translator
P302	6J58A	24	3	
P303	6J58C	24	3	
P503	1F02A	35	3	
P504	1F02C	35	3	
P506	1F03A	35	3	
P507	1F03C	35	2	Breakpoint Translator
P509	1F02A	35	2	
P510	1F04C	35	2	
P512	1F05A	35	2	
P513	1F05C	35	2	

TERM	LOCATION	PAGE	QUAD.	DEFINITION
W170	6N49B	25	2	Internal M. C. (Sets P → 00020)
W700	6L41B			
W701	6L42B			$U^2 \rightarrow P^1$
W702	6L43B			
W703	6L44B			
W790	6L30A			
W791	6L30C			Clear P
W792	6L29C			

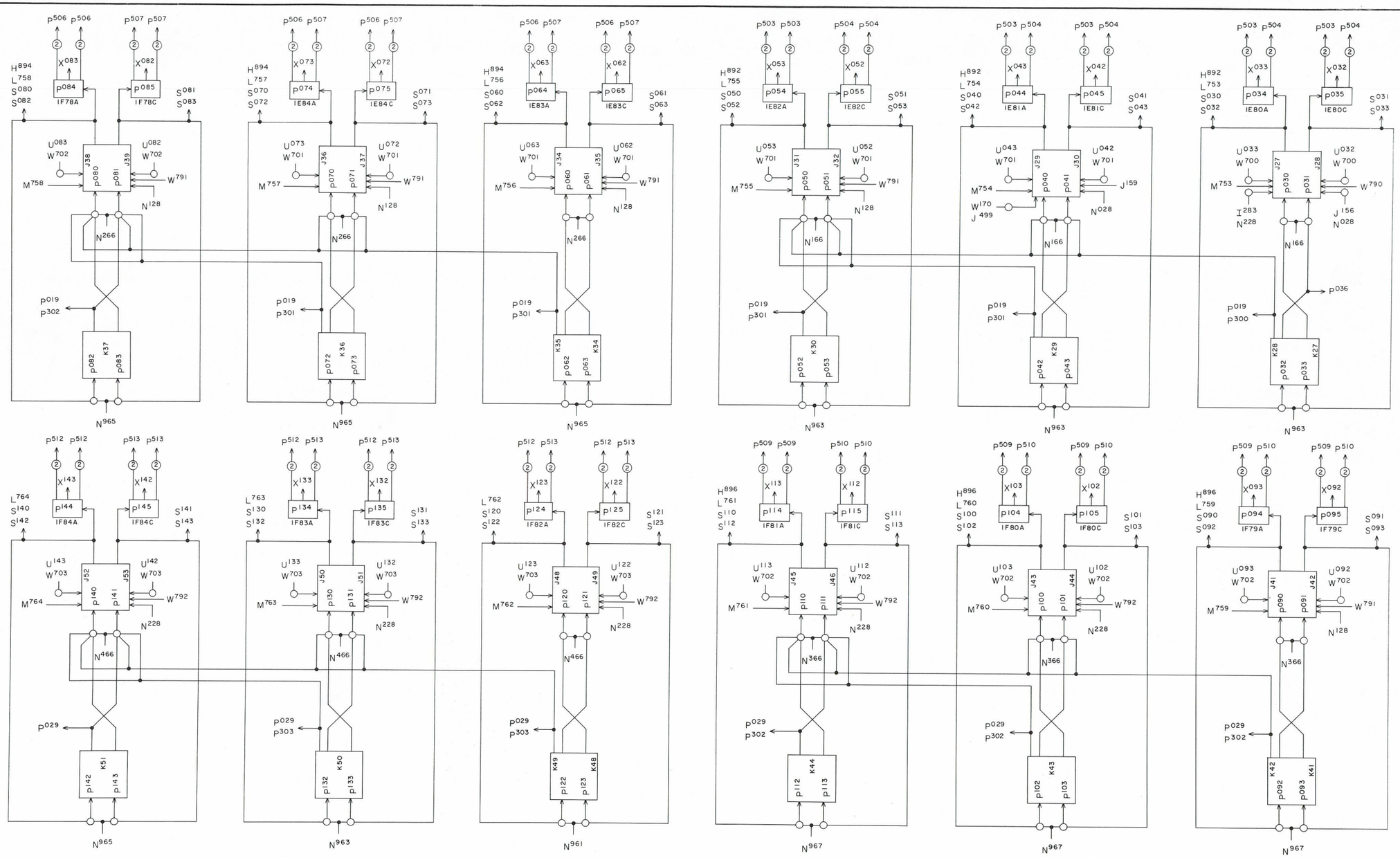

NOTES:

1. ALL JACKS ARE ON CHASSIS 6 UNLESS OTHERWISE SHOWN

REV.	AUTH.	DATE	REVISIONS	REG.	DRW.	CHK.	APPROVED

APPROVED
CHECKED R. R. M. 9-25-62
DRAWN
DESIGNED

REFERENCE DRAWINGS

COMPONENTS (UNLESS OTHERWISE INDICATED)	TOLERANCE	VALUE	SIZE
RESISTORS			
CAPACITORS			

TITLE
P REGISTER BITS 03 THRU 14

CONTROL DATA CORPORATION

PROJECT OR PRODUCT
1604-A

DRAWING NUMBER
XDP 214606

REV
G

PAGE
24.1

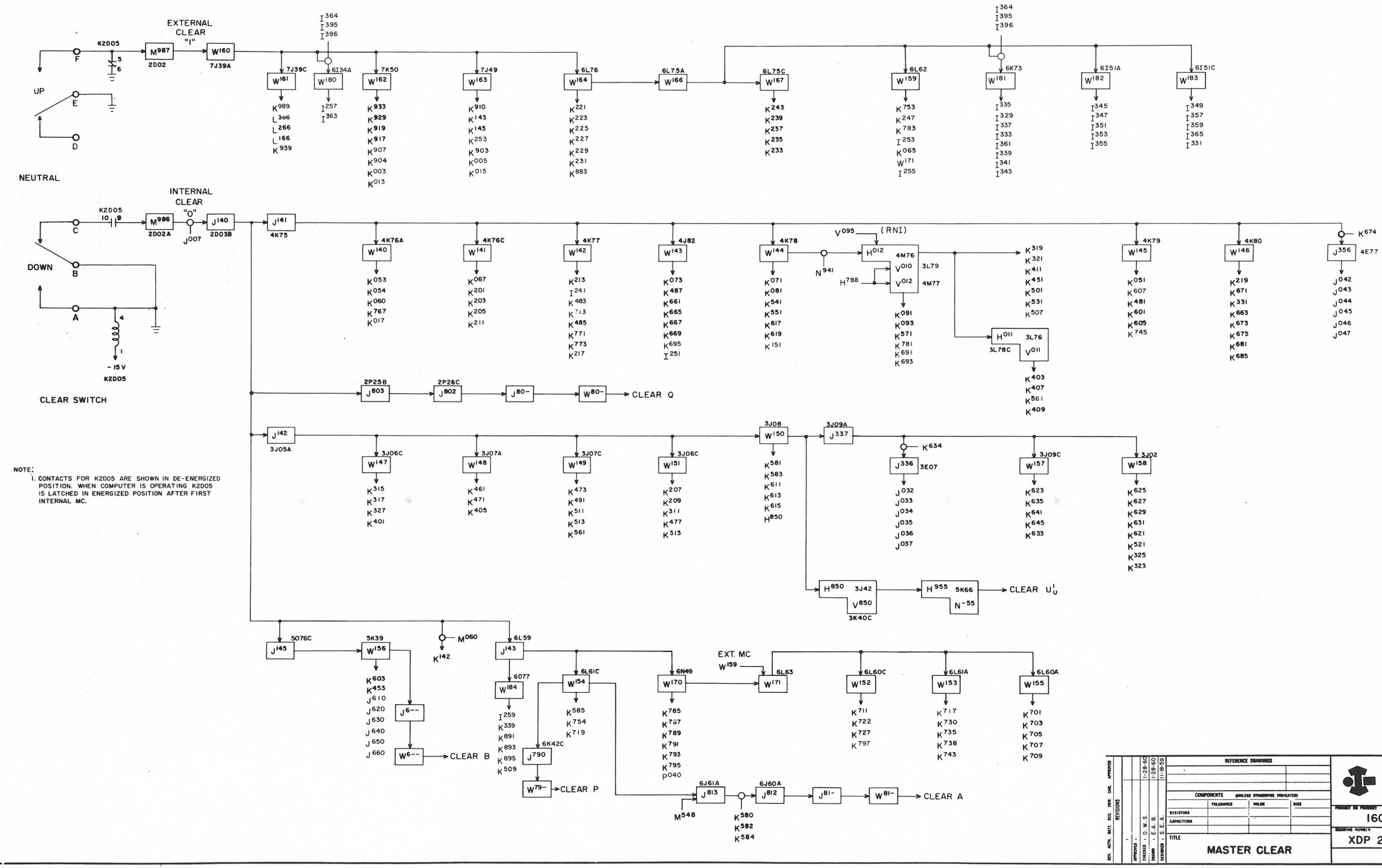

NOTE:

1. CONTACTS FOR K2D05 ARE SHOWN IN DE-ENERGIZED POSITION. WHEN COMPUTER IS OPERATING K2D05 IS LATCHED IN ENERGIZED POSITION AFTER FIRST INTERNAL MC.

REV. AUTH.	DATE	REVISIONS	DRW. CHK.	APPROVED
		-		

APPROVED -
CHECKED - D. W. S. 1-28-60
DRAWN - E. A. B. 1-28-60
DESIGNED - S. E. A. 11-18-59

REFERENCE DRAWINGS

COMPONENTS (UNLESS OTHERWISE INDICATED)

	TOLERANCE	VALUE	SIZE
RESISTORS			
CAPACITORS			

TITLE

MASTER CLEAR

CONTROL DATA CORPORATION

PROJECT OR PRODUCT

1604-A

DRAWING NUMBER

XDP 214539

REV F

PAGE 25

TERM	LOCATION	PAGE	QUAD.	DEFINITION
J009	4K55C	28	1	60 ∿
J140	6D03B	25	0	Internal M.C.
K029	4K58C	28	0	Manual Control
M156	7K14A			
M986	2D02A	25	0	Clear Switch $\overline{\text{Down}}$
V008	4J06	28	0	Manual Control
V025	4L10B	29	3	Odd Resync. Pulse
V297	7J21	29	3	
W163	7J49	25	0	External M.C.

TERM	LOCATION	PAGE	QUAD.	DEFINITION

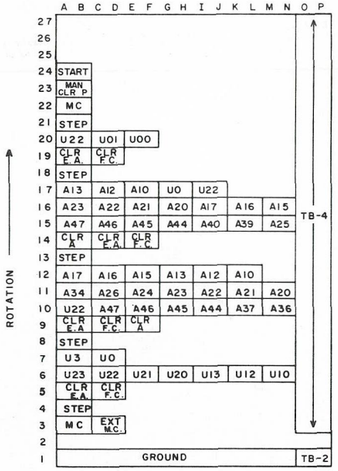

STEPPING SWITCH TERMINAL BOARD

AUTO LOAD PROGRAM

1. MASTER CLEAR INT., MASTER CLEAR EXT.
2. STEP
3. CLEAR U^1
4. SET U^1 = 74 0 32011
5. STEP
6. CLEAR U^1 AND A
7. SET U^1 = 20 0 00000; A = 74 0 32005 74 7 32000
8. STEP
9. CLEAR U^1 AND A
10. SET U^1 = 20 0 00001; A = 74 3 00002 74 7 32000
11. STEP
12. CLEAR U^1
13. SET U^1 = 20 0 00003
14. STEP
15. MASTER CLEAR
16. MANUAL CLEAR P
17. START

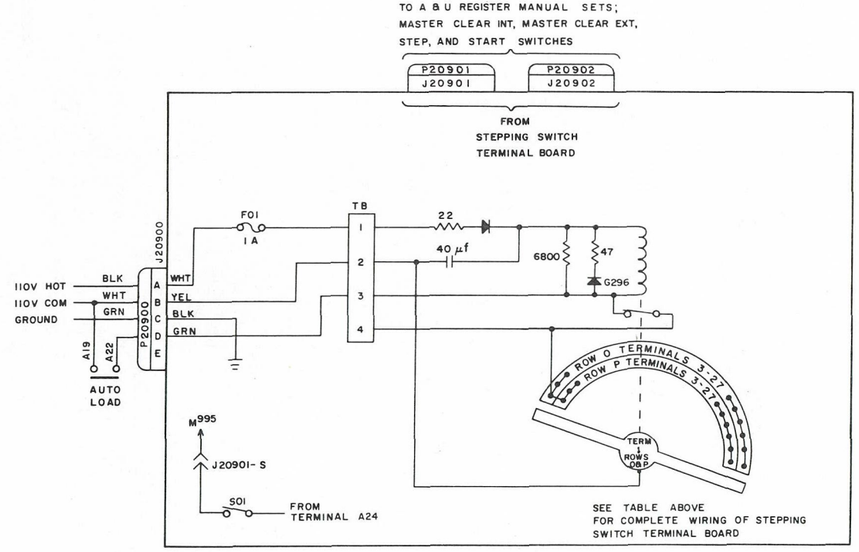

AUTO LOAD CHASSIS

NOTE

THIS DIAGRAM SUPPLEMENTS THE COMPUTER MASTER CLEAR (PAGE 25) AND MANUAL CONTROL (PAGE 28) DIAGRAMS WHEN THE AUTO LOAD IS USED.

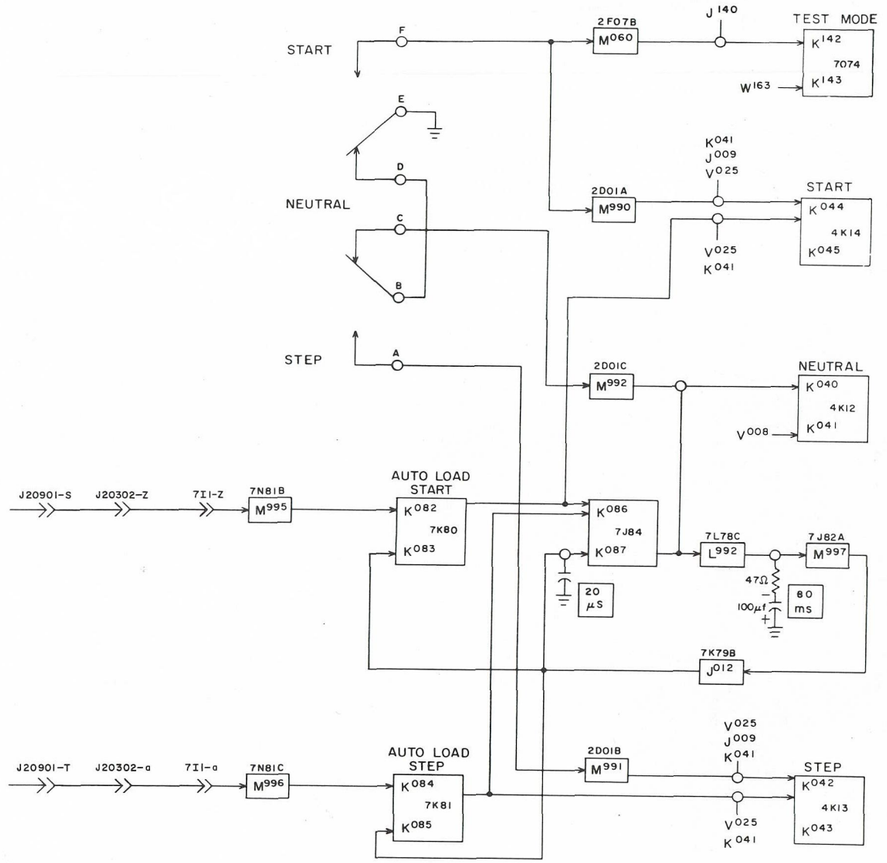

MANUAL CONTROL

(PAGE 28)

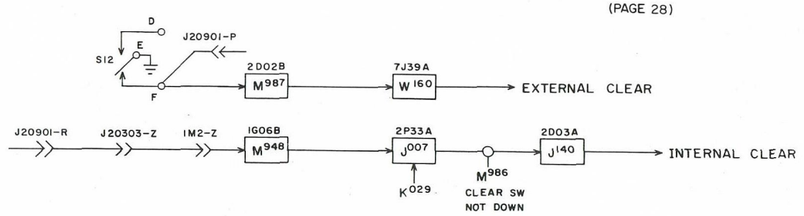

COMPUTER MASTER CLEAR

(PAGE 25)

REV.	AUTH.	DATE	REVISIONS

APPROVED
CHECKED
DRAWN
DESIGNED

REFERENCE DRAWINGS

COMPONENTS (UNLESS OTHERWISE INDICATED)	TOLERANCE	VALUE	SIZE
RESISTORS			
CAPACITORS			

TITLE
AUTO LOAD CIRCUIT

CONTROL DATA CORPORATION

PROJECT OR PRODUCT
1604-A

DRAWING NUMBER
XDP 214558

REV
F

BY
26

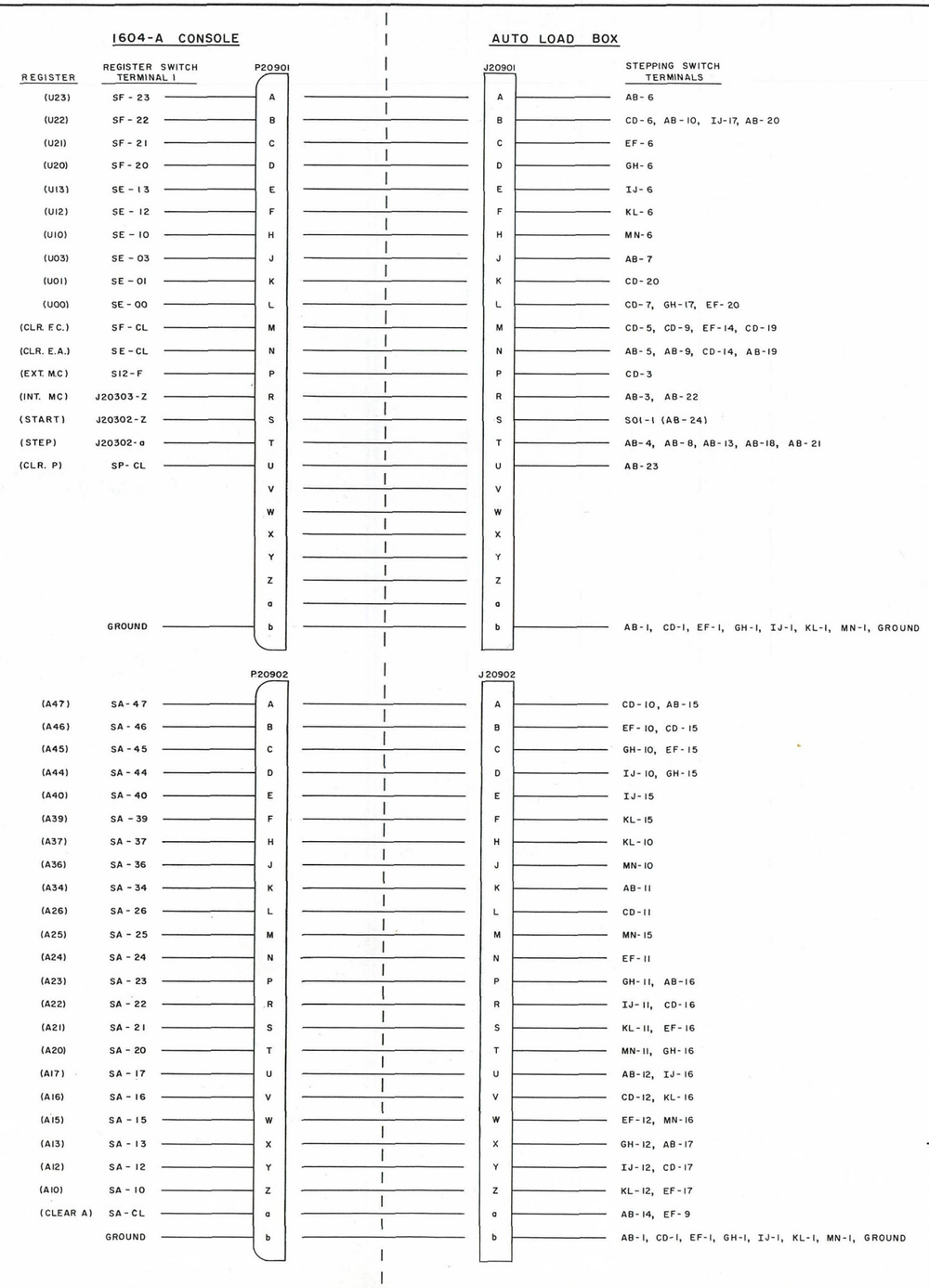

REV. AUTH. DATE REQ. DRW. CHK. APPROVED
REVISIONS
APPROVED
CHECKED
DRAWN DWA 5/7/64
DESIGNED

REFERENCE DRAWINGS

COMPONENTS (UNLESS OTHERWISE INDICATED)

	TOLERANCE	VALUE	SIZE
RESISTORS			
CAPACITORS			

TITLE
AUTO LOAD WIRING DIAGRAM

CONTROL DATA CORPORATION

PROJECT OR PRODUCT
1604-A

DRAWING NUMBER
232202 F

PAGE 27

TERM	LOCATION	PAGE	QUAD.	DEFINITION
F476	3M31C	19.3	3	$\overline{76}$
F639	4K72A	19.5	0	$\overline{00 + 77}$
F673	4K72C	19.5	3	00 + 77
F675	6H04C	19.5	1	75
F682	4N83A	19.5	1	(Mode Switch Down) + (22 + 23 + 74 - 77) + (b ≠ 7)
F700	6J15	19.6	1	b ≠ 0
F701	5O11	19.6	1	b ≠ 1
F702	5P25	19.6	1	b ≠ 2
F703	5O10	19.6	1	b ≠ 3
F704	5P21	19.6	3	b ≠ 4
F705	5O09	19.6	3	b ≠ 5
F706	5P20	19.6	3	b ≠ 6
F707	6J11C	19.6	3	b ≠ 7
F710	6J12B	19.6	0	76
F711	6J13A	19.6	0	b = 0 + b = 4 +(b = 1 + 5) (Stop Key 1)
F730	4K65A	19.6	0	b ≠ 0
F911	6H05C	19.6	1	[23(b = 0 + 4) Q = 0] + [23(b = 1 + 5) Q ≠ 0] + [23(b = 2 + 6) Q Pos.] + [23(b = 3 + 7) Q Neg.]
F912	6H06A	19.6	3	b = 0 + 4
F913	6H06C	19.6	3	b = 1 + 5
F914	6H07A	19.6	3	b = 2 + 6
F915	6H07C	19.6	1	b = 3 + 7
F916	6H10A	6, 19.6	0	[22(b = 0 + 4) A = 0] + [22(b = 1 + 5) A ≠ 0] + [22(b = 2 + 6) A Pos.] + [22(b = 3 + 7) A Neg.]
I258	6K66A	30, 53	1, 0	$\overline{\text{Internal Interrupt Request}}$
J062	4J62	4	0	Exit FF Clear
J063	4J63	4	0	Exit FF Set
J113	4M25A			$\overline{\text{Interrupt}}$ Half Exit
J140	2D03B	25	0	Internal M.C.
J900	4J17	28	0	Light Disconnect
K086	7J84	26	1	Auto Load Circuit
M986	2D02A	25	0	Clear Switch $\overline{\text{Down}}$
M156	7K14A	71	1	Reader Neutral Switch
P520	1F06	35	0	Breakpoint

TERM	LOCATION	PAGE	QUAD.	DEFINITION
V020	2E02	29	3	Resync. Pulses
V021	2E05	29	3	
V022	2E03	29	3	
V023	2E06	29	3	
V024	4L09	29	2	
V025	4L10B	29	3	
V028	4K61A	29	1	
V029	4K56C	29	1	
V033	4M02	4	0	Full Exit
V071	4P53	54.0,.1	1	Storage Resume
W140	4K76A	25	0	Internal M.C.
W145	4K79	25	1	
W163	7J49	25	0	External M.C.
W781	4P14C	60	3	No Buffer Active

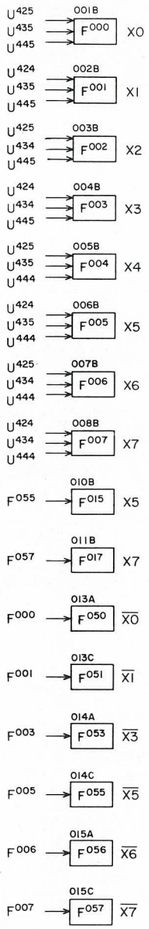

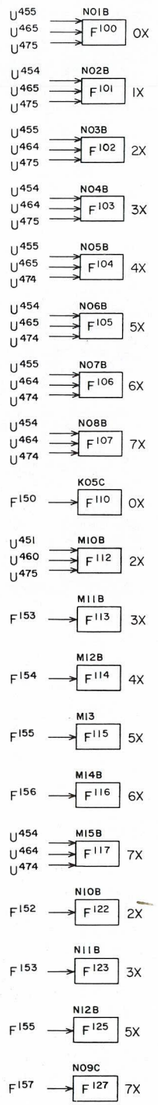

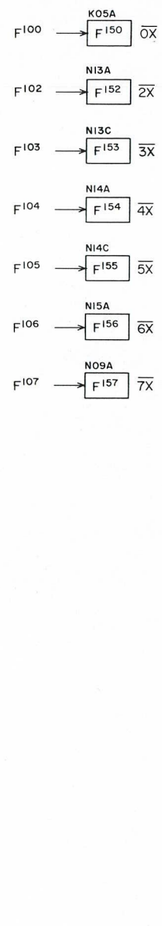

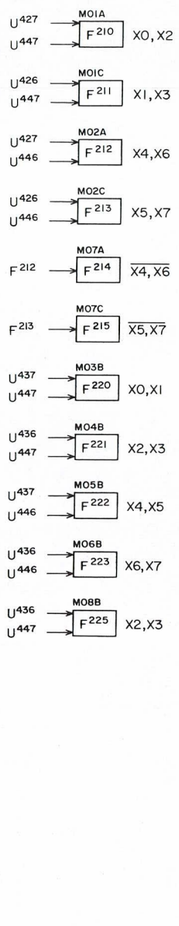

NOTE:
ALL JACKS ON CHASSIS 6 UNLESS OTHERWISE SHOWN.

REV.	AUTH.	DATE	REL.	DRW.	CHK.	APPROVED
REVISIONS						
					APPROVED	
					CHECKED	2-16-65
					DRAWN	3-1-63
					DESIGNED	I.G.A.S. 12-10-62

REFERENCE DRAWINGS

COMPONENTS (UNLESS OTHERWISE INDICATED)	TOLERANCE	VALUE	SIZE
RESISTORS			
CAPACITORS			

TITLE
TRANSLATORS
F000 THRU F299

CONTROL DATA CORPORATION

PROJECT OR PRODUCT
1604-A

DRAWING NUMBER
XDP 214620

PAGE 19.1

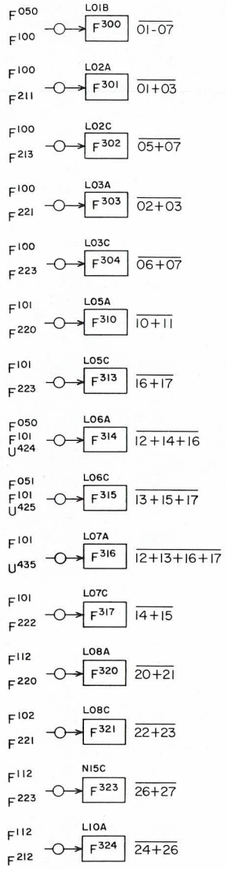

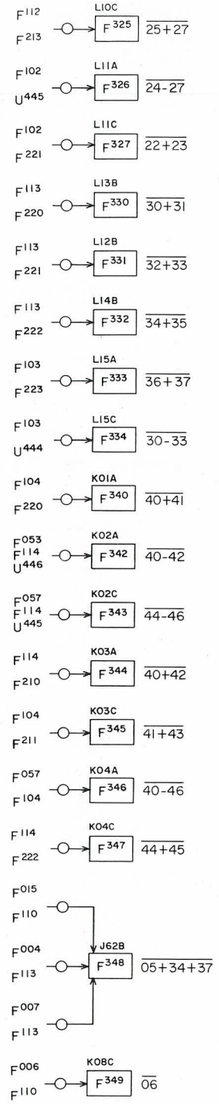

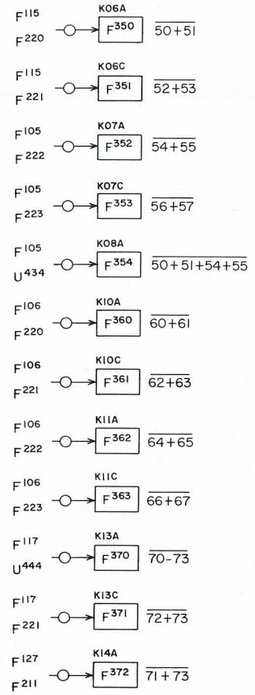

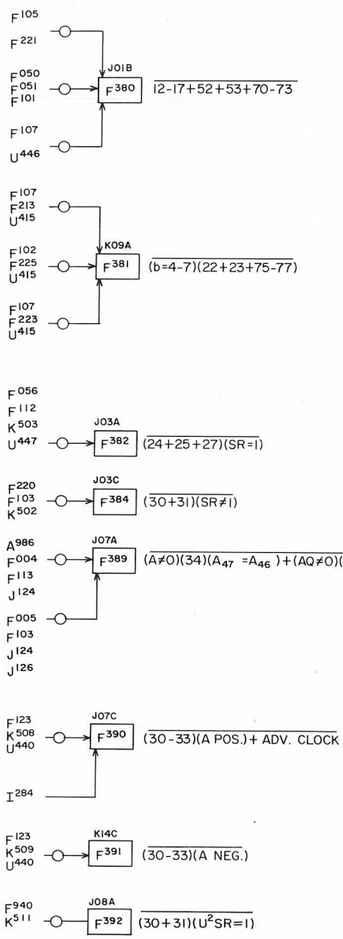

NOTE:

ALL JACKS ON CHASSIS 6 UNLESS OTHERWISE SHOWN.

REVISIONS	KEY	AUTH.	DATE	REG.	ENGR.	CHK.	APPROVED
	-						

APPROVED -
CHECKED - Miller 2-16-65
DRAWN - I. MAN 3-2-63
DESIGNED - G. A. S. 12-10-62

REFERENCE DRAWINGS

COMPONENTS (UNLESS OTHERWISE INDICATED)

	TOLERANCE	VALUE	SIZE
RESISTORS			
CAPACITORS			

TITLE
TRANSLATORS
F 300 THRU F 399

CONTROL DATA CORPORATION

PROJECT OR PRODUCT
1604-A

DRAWING "NO."
XDP 214621 G

PAGE
19.2

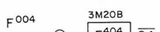

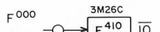

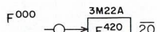

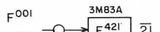

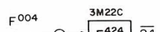

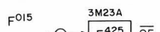

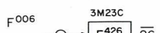

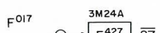

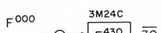

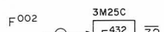

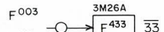

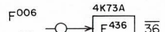

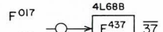



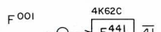







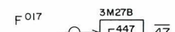

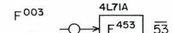

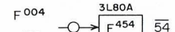

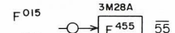

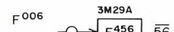

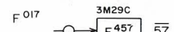



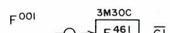

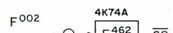



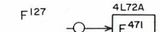



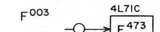









STR. ASYM.	DATE	REG. SYMB.	ORIG.	APPROVED
REVISIONS				

APPROVED: R. Hyde 3-26-63
CHECKED: J. Hyde 3-26-63
DRAWN: I. MAN 12-10-62
DESIGNED: G. A. S.

REFERENCE DRAWINGS

COMPONENTS (UNLESS OTHERWISE INDICATED)

	TOLERANCE	VALUE	SIZE
RESISTORS			
CAPACITORS			

TITLE
TRANSLATORS
F 400 THRU F 499

CONTROL DATA CORPORATION

PROJECT OR PRODUCT
1604-A

DRAWING NUMBER
XDP 214622

PAGE
19.3

Inputs	Location	Function
F300, F310, F354, F332	3L82A F500	01-07+10+11+34+35 +50+51+54+55
F327, F475, F476, U415	3L81A F501	(22+23+75+76)(b=0-3)
F333, F346, F380	4M09A F502	12-17+36+37+40-46 +52+53+70-73
F351	4M09C F503	52+53
F360, F420, F421, F447	3L82C F505	20+21+47+60+61
F381	3M84A F506	(22+23+75-77)(b=4-7)
F320, F360, F353, F447	3M84C F507	20+21+47+56+57+60+61
F361, F362, F363	4N16C F509	62-67
F326, F334	3M82A F512	24-27+30-33
F324	3M82C F513	24+26
F325	3M81A F514	25+27
F421, F447	3M81C F515	21+47
F152, F053	6H13B F516	23
F323, F325	3M80B F517	25+26+27
F426, F432	3M79B F518	26+32
F821	4M25C F519	21
F404	3M78A F520	04
F436	4M17A F521	36
F313, F437	4M11A F522	16+17+37
F343, F443	4M11C F523	43-46
F313	4M12A F524	16+17
F424, F427	3M76A F525	24+27
F425, F427, F433	3M77C F526	25+27+33
F310, F404	3N84A F527	04+10+11
F321, F516	6H09A F528	22
F472, I250	4M12C F529	72+ ADV. CLOCK
F370, F344, F437, I296, F314	4M13A F530	12+14+16+37+40+42 +70-73+ ADV. CLOCK
F347, F443	4M13C F531	43-45
F463	4M14B F533	63
F474	4N16A F534	74
F700, F707, F474	4M15A F535	74.0+74.7
F331, F384	3N84C F536	(30+31)(SR≠0)+32+33
F331	3N83B F537	32+33
F330	3N81B F540	30+31
F330, F331	3N80B F541	30-33
F345, F372	4M16A F542	41+43+71+73
F443	4N01B F543	43
F315, F441	4M16C F544	13+15+17+41
F446	4N02A F545	46
F324, F330	3M78C F546	24+26+30+31
F362	4N02C F547	64+65
F363	4N03A F548	66+67
F103, F222, F005, F105, F000, F105	3M71C F549	$\overline{34+35+50+55}$
F454	3N79B F550	54
F320, F447	3M76C F552	20+21+47
F353	3083B F553	56+57
F352, F361, F362, F363	4N04A F554	54+55+62-67
F326	3082B F555	24-27
F327, F475, F476	3081B F557	22+23+75+76
F474, F535	4M15C F558	74.1-74.6
F437	4N05B F559	37
F421	3080B F560	21
F382	3079A F561	(24+25+27)(SR=1)
F345, F471	4N06A F562	41+43+71
F371, I250	4N06C F563	72+73+ ADV. CLOCK
F323	3079C F565	26+27
F340	4N07A F566	40+41
F437	4027A F567	37
F320, F360, F447	3078A F569	20+21+47+60+61
F300, F332	3078C F571	01-07+34+35
F455	3077B F573	55
F462	4N07C F575	62
F371, F443, I296	4004A F576	43+72+73+ADV. CLOCK
F680	4J64A F577	20+21+47
F457, F461	4J32A F578	57+61
F578	4J32C F579	$\overline{57+61}$
F462	4K70C F581	62
F476	3M83C F582	76
F301, F330	3J56A F585	01+03+30+31
F303, F330	3J56C F586	02+03+30+31
K490, F433	3J55B F587	27+33
F332	3J54A F588	34+35
F389, F300	3J54C F589	(01-07)+(34)($A_{47}=A_{46}$)(A≠0) +(35)($A_{47}=A_{46}$)(AQ≠0)
F324, F334, F424, J172	3K41C F590	(24+26+27+30-33)(A NEG.)
F447	3K55A F593	47
F332, F354	3K55C F594	34+35+50+51+54+55
F350	3P16C F596	50+51
F370, F437, I240	4005A F597	37+70-73+ADV. CLOCK

REV. AUTH. DATE REQ. DRW. CHK. APPROVED

REVISIONS

APPROVED

CHECKED 3-16-63

DRAWN MAN 3-12-63

DESIGNED G.A.S. 12-10-62

REFERENCE DRAWINGS

COMPONENTS (UNLESS OTHERWISE INDICATED)

	TOLERANCE	VALUE	SIZE
RESISTORS			
CAPACITORS			

TITLE

TRANSLATORS F500 THRU F599

CONTROL DATA CORPORATION

PROJECT OR PRODUCT 1604-A

DRAWING NUMBER XDP 214623 E

PAGE 19.4

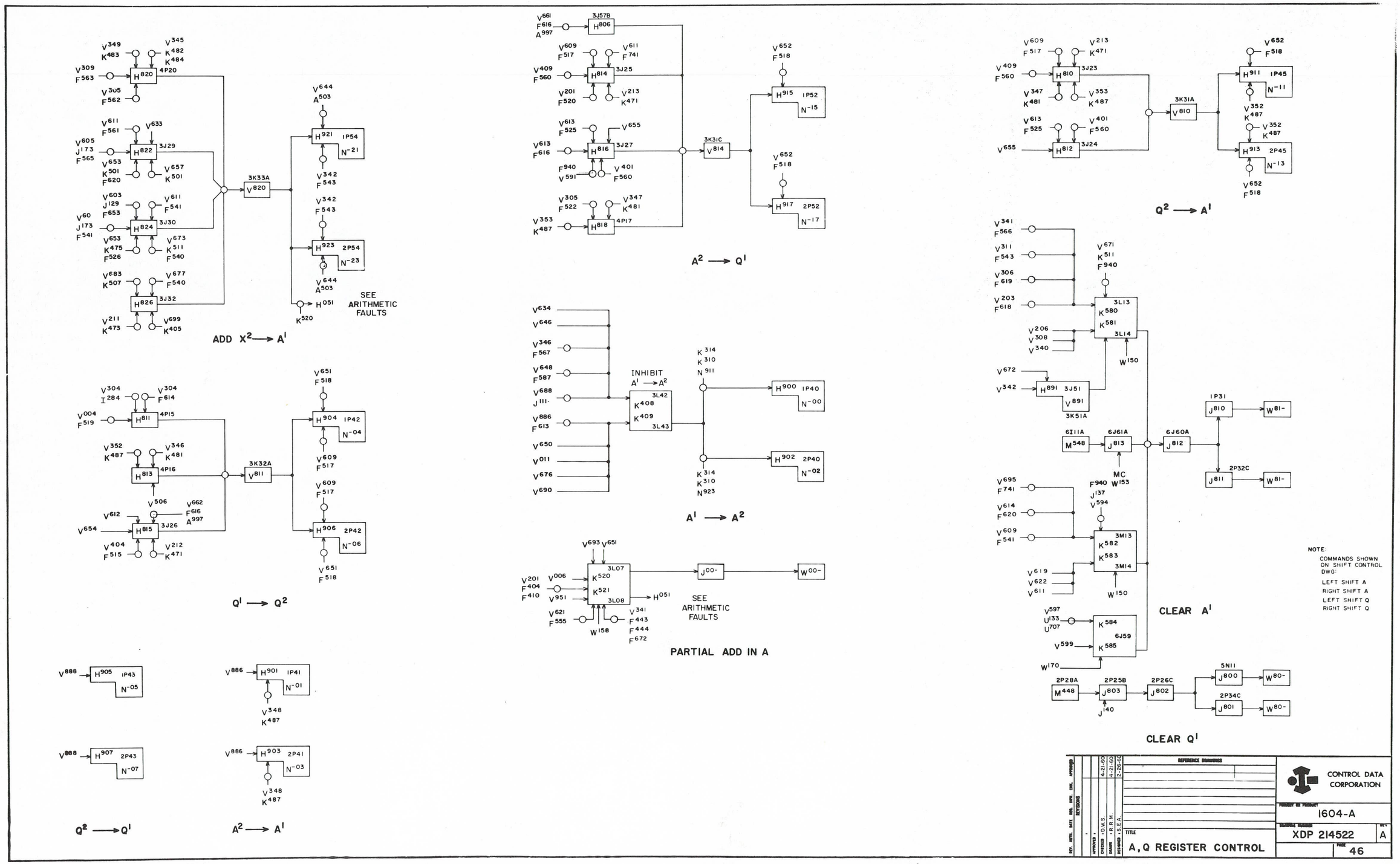
ADD X² → A¹
SEE ARITHMETIC FAULTS
Q¹ → Q²
Q² → Q¹
A² → A¹
A² → Q¹
INHIBIT A¹ → A²
A¹ → A²
PARTIAL ADD IN A
Q² → A¹
CLEAR A¹
CLEAR Q¹
NOTE:
COMMANDS SHOWN ON SHIFT CONTROL DWG:
LEFT SHIFT A
RIGHT SHIFT A
LEFT SHIFT Q
RIGHT SHIFT Q
CONTROL DATA CORPORATION
1604-A
XDP 214522
A
46
A, Q REGISTER CONTROL

A REGISTER

RANK A^1
48 STAGES
A^{000}/A^{001} THROUGH A^{470}/A^{471}

RANK A^2
48 STAGES
A^{002}/A^{003} THROUGH A^{472}/A^{473}

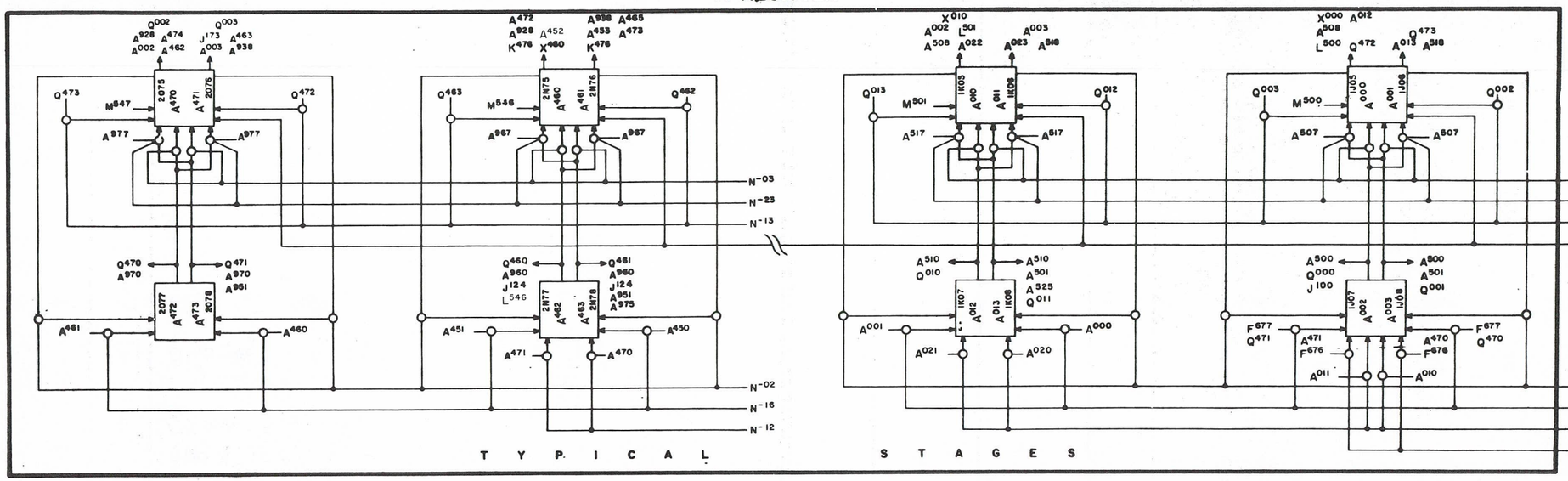

Q REGISTER

RANK Q^1
48 STAGES
Q^{000}/Q^{001} THROUGH Q^{470}/Q^{471}

RANK Q^2
48 STAGES
Q^{002}/Q^{003} THROUGH Q^{472}/Q^{473}

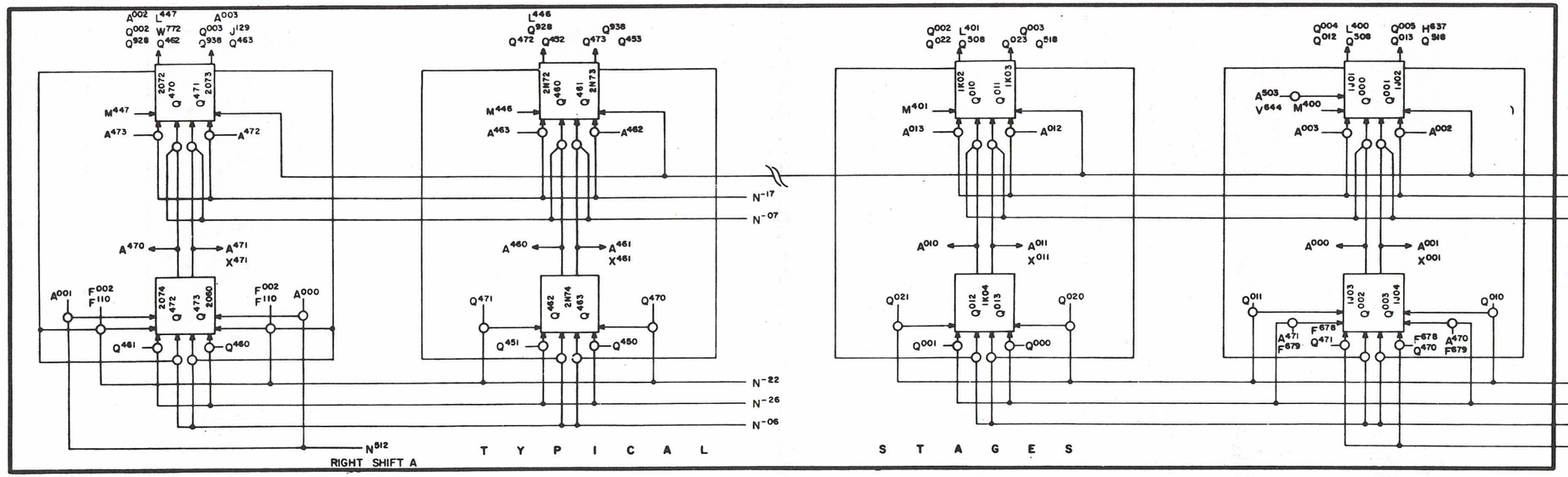

APPROVED		
CHECKED	D. SWEDBERG	3-25-60
DRAWN	R. MILLER	3-24-60
ENGINEER	S. ASCHENBRENNER	1-13-60

REFERENCE DRAWINGS

COMPONENTS (UNLESS OTHERWISE INDICATED)

	TOLERANCE	VALUE	MFR.
RESISTORS			
CAPACITORS			

TITLE: LOGIC DIAGRAM A & Q REGISTER

CONTROL DATA CORPORATION

PROJECT OR PRODUCT: 1604-A

DRAWING NUMBER: XDP214563 REV

PAGE: 47.0

TERM	LOCATION	PAGE	QUAD.	DEFINITION
F676	1J70A	19.5	1	05 + 34 + 37 + Normalize
F677	1J70C	19.5	1	$\overline{05 + 34 + 37 + \text{Normalize}}$
F678	1H83A	19.5	1	$\underline{Q^6}$
F679	1H83C	19.5	1	$\overline{Q^6}$
N000	1K20B			$A^1 \rightarrow A^2$
N001	1J15A			$A^2 \rightarrow A^1$
N010	1J20B			Right Shift A
N011	1J17B			$Q^2 \rightarrow A^1$
N014	1K21B			Left Shift A
N021	1J16B			Add X^2 to A^1
N100	1M22B			$A^1 \rightarrow A^2$
N101	1M25B			$A^2 \rightarrow A^1$
N110	1M21B			Right Shift A
N111	1M23B			$Q^2 \rightarrow A^1$
N114	1N25B			Left Shift A
N121	1M24B			Add X^2 to A^1
N200	1N40B			$A^1 \rightarrow A^2$
N201	1O39B			$A^2 \rightarrow A^1$
N210	1O42B			Right Shift A
N211	1O41B			$Q^2 \rightarrow A^1$
N214	1N41B			Left Shift A
N221	1O40B			Add X^2 to A^1
N614	1H84A			Connect A_{47} to A_{00}
W810	1O16B			Clear A
W811	1J40B			

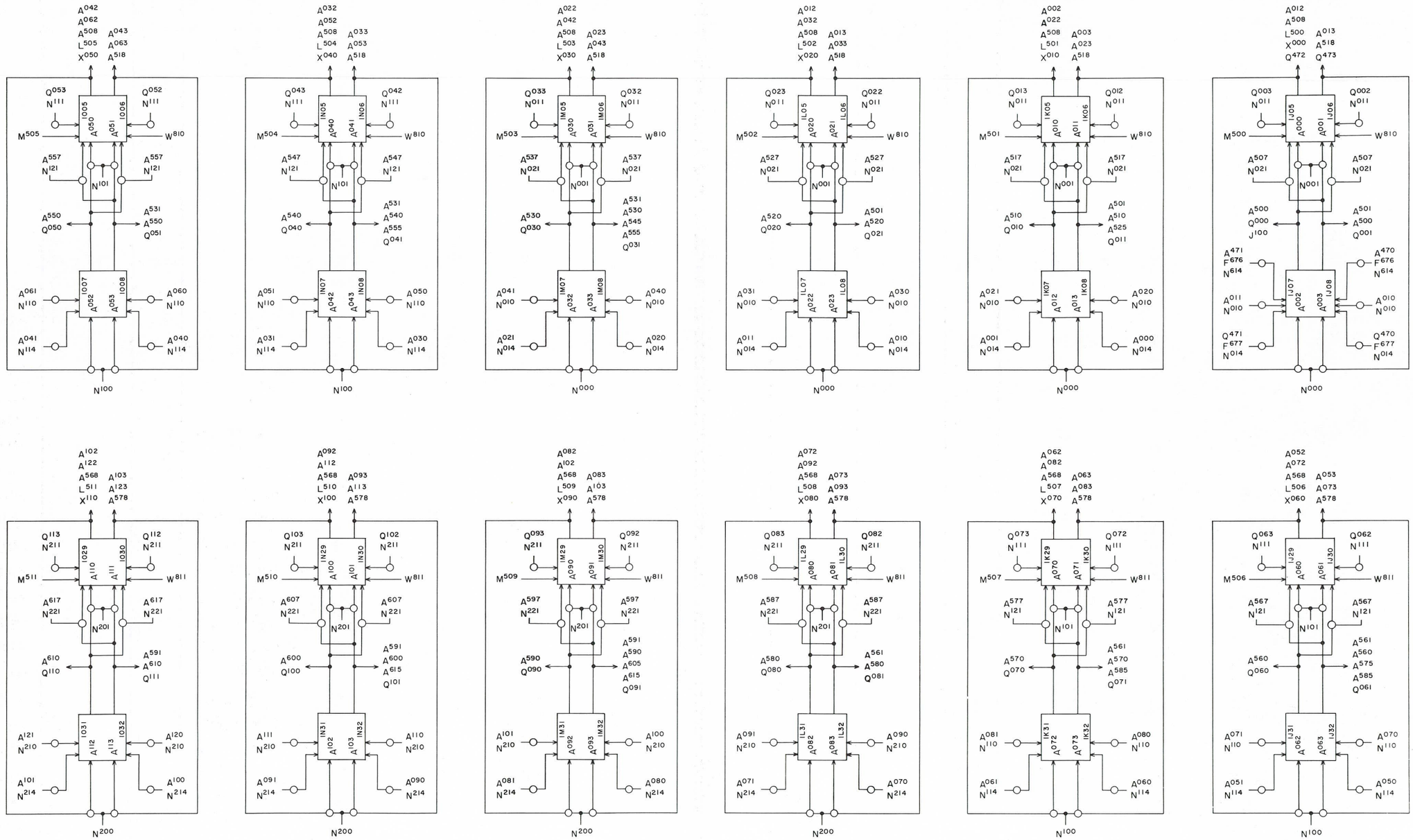

REV.	AUTH.	DATE	REQ.	DRW.	CHK.	APPROVED
REVISIONS						
APPROVED						
CHECKED						
DRAWN	R.R.M.	9-6-62				
DESIGNED						

REFERENCE DRAWINGS

COMPONENTS (UNLESS OTHERWISE INDICATED)

	TOLERANCE	VALUE	SIZE
RESISTORS			
CAPACITORS			

TITLE
A REGISTER
BITS 00 THRU 11

CONTROL DATA CORPORATION

PROJECT OR PRODUCT
1604-A

DRAWING NUMBER
XDP 214593

REV

PAGE
47.1

TERM	LOCATION	PAGE	QUAD.	DEFINITION
N300	1J63B			$A^1 \rightarrow A^2$
N301	1J60B			$A^2 \rightarrow A^1$
N310	1J64B			Right Shift A
N311	1J62B			$Q^2 \rightarrow A^1$
N314	1K64B			Left Shift A
N321	1J61B			Add X^2 to A^1
N400	1M63B			$A^1 \rightarrow A^2$
N401	1M65B			$A^2 \rightarrow A^1$
N410	1M62B			Right Shift A
N411	1M64B			$Q^2 \rightarrow A^1$
N414	1M61B			Left Shift A
N421	1M68B			Add X^2 to A^1
N500	1P69B			$A^1 \rightarrow A^2$
N501	1P72B			$A^2 \rightarrow A^1$
N510	1O71B			Right Shift A
N511	1P70B			$Q^2 \rightarrow A^1$
N514	1O70B			Left Shift A
N521	1P71B			Add X^2 to A^1
W812	1O44B			Clear A
W813	1O62B			

TERM	LOCATION	PAGE	QUAD.	DEFINITION

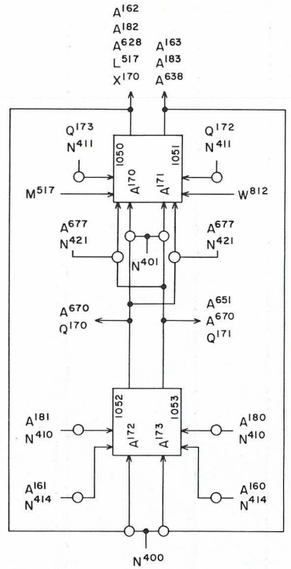

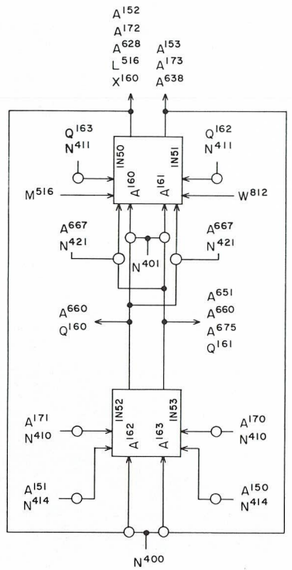

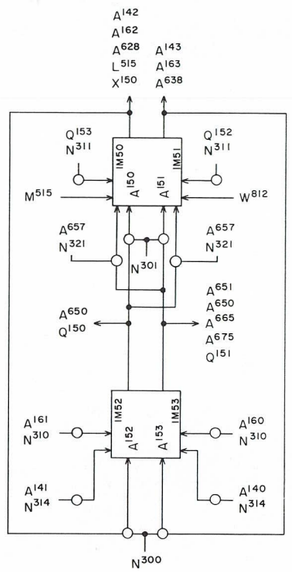

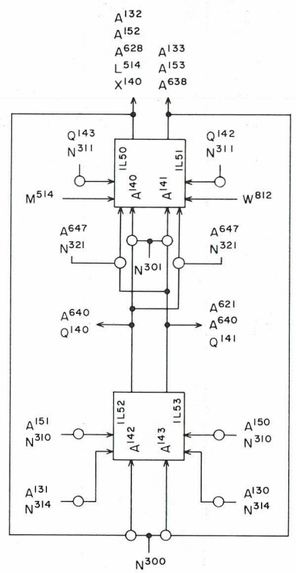

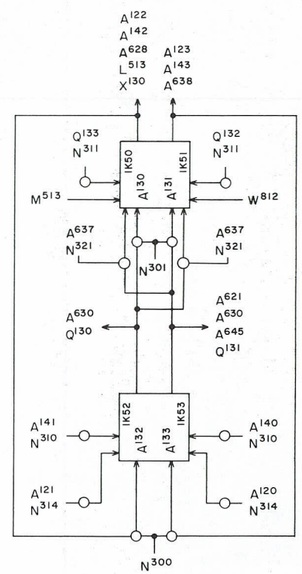

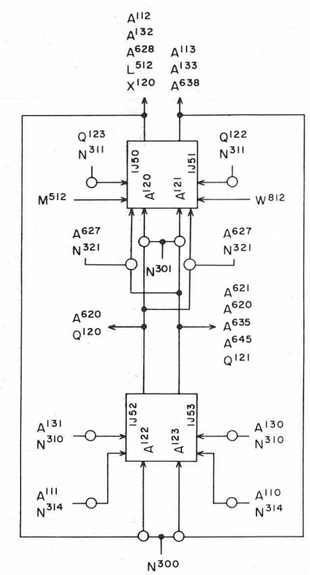

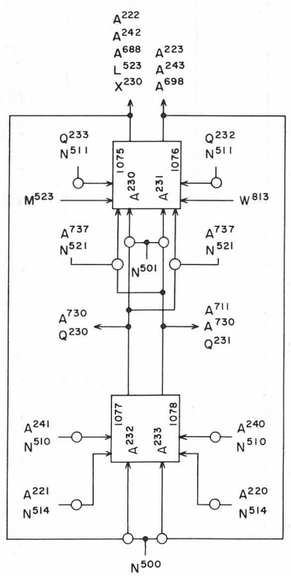

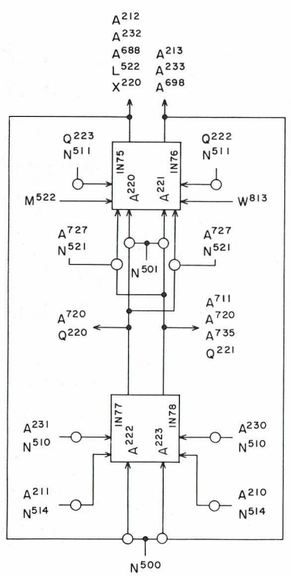

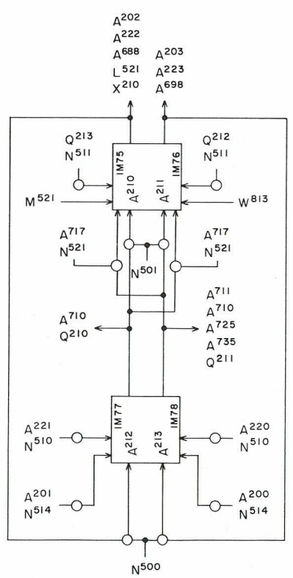

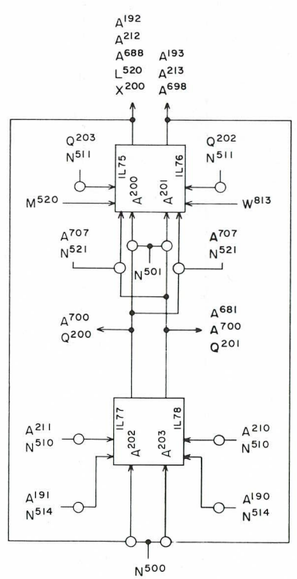

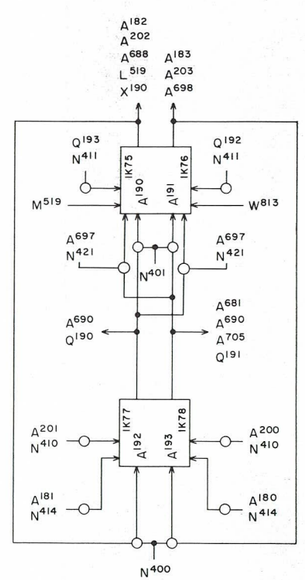

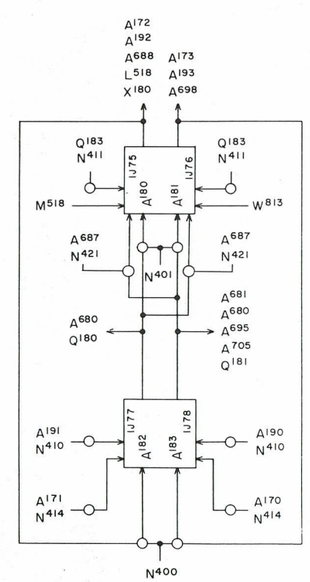

REVISIONS				
KEY	AUTH.	DATE	REQ.	DRW. CHK. APPROVED

DESIGNED R. R. M. 9-6-62
DRAWN
CHECKED
APPROVED

REFERENCE DRAWINGS

COMPONENTS (UNLESS OTHERWISE INDICATED)

	TOLERANCE	VALUE	SIZE
RESISTORS			
CAPACITORS			

TITLE

A REGISTER BITS 12 THRU 23

CONTROL DATA CORPORATION

PROJECT OR PRODUCT 1604-A

DRAWING NUMBER XDP 214594 REV

PAGE 47.2

TERM	LOCATION	PAGE	QUAD.	DEFINITIO I
N002	2K20B			$A^1 \rightarrow A^2$
N003	2J71B			$A^2 \rightarrow A^1$
N012	2J20B			A Right Shift
N013	2J17B			$Q^2 \rightarrow A^1$
N016	2K21B			Left Shift A
N023	2J16B			Add X^2 to A^1
N102	2M22B			$A^1 \rightarrow A^2$
N103	2M25B			$A^2 \rightarrow A^1$
N112	2M21B			A Right Shift
N113	2M23B			$Q^2 \rightarrow A^1$
N116	2N25B			Left Shift A
N123	2M24B			Add X^2 to A^1
N202	2N40B			$A^1 \rightarrow A^2$
N203	2O39B			$A^2 \rightarrow A^1$
N212	2O42B			A Right Shift
N213	2O41B			$Q^2 \rightarrow A^1$
N216	2N41B			Left Shift A
N223	2O40B			Add X^2 to A^1
W814	2D16B			Clear A
W815	2J40B			

TERM	LOCATION	PAGE	QUAD.	DEFINITION

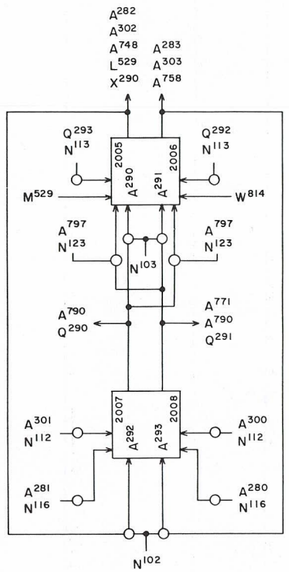

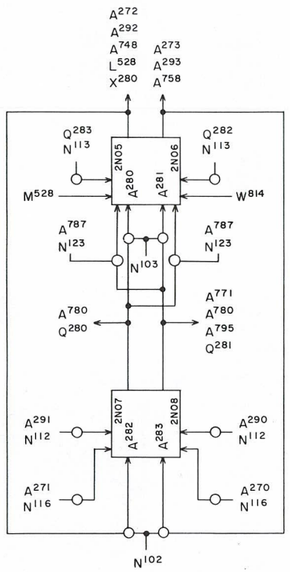

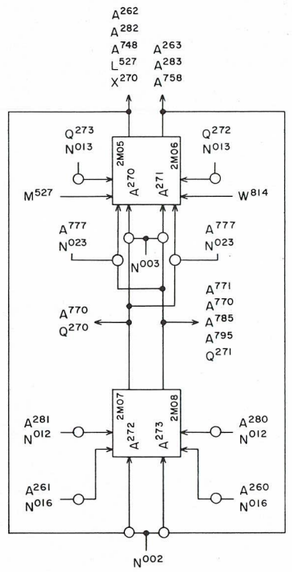

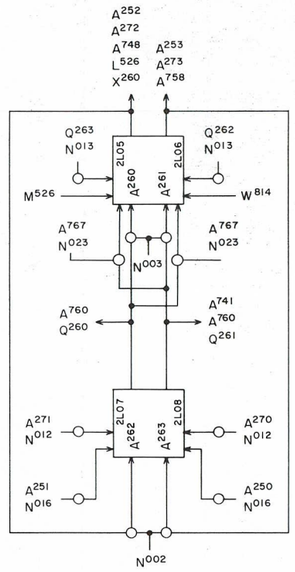

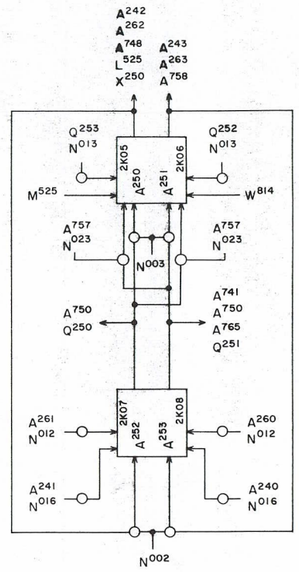

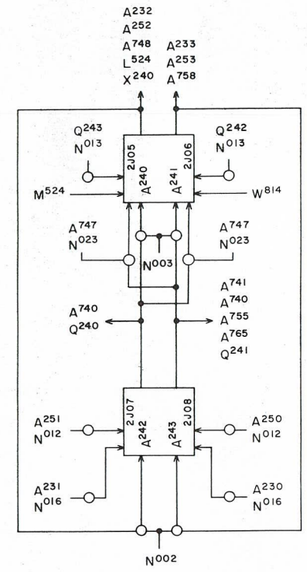

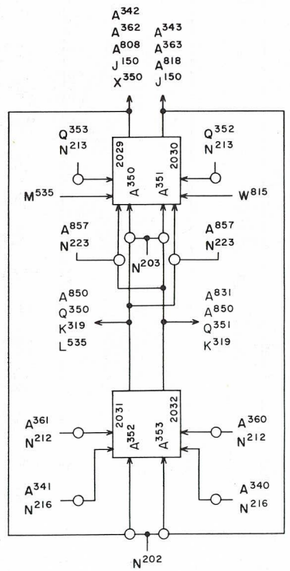

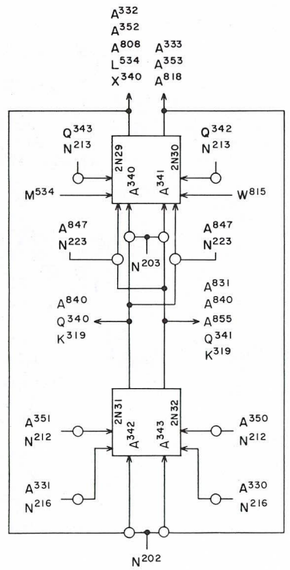

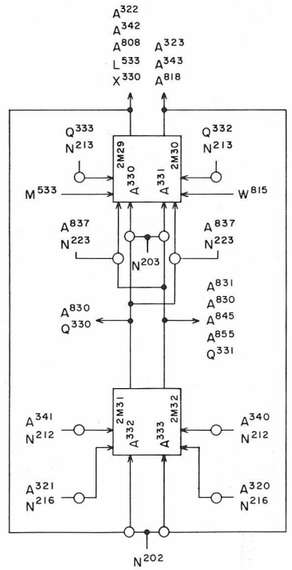

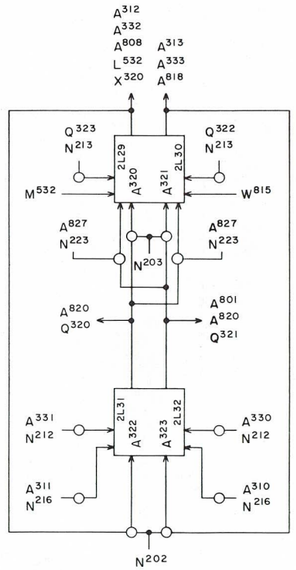

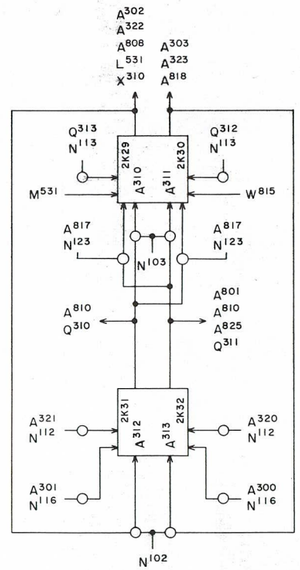

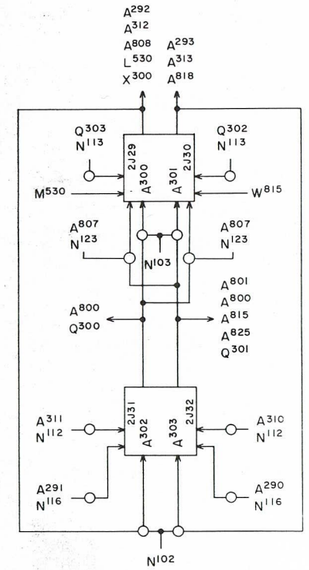

REV.	APPR.	DATE	ENG. APPROVED	DRFT. CHK.	APPROVED
REVISIONS	-				

APPROVED -
CHECKED - R. R. M.
DRAWN - 9-7-62
DESIGNED -

REFERENCE DRAWINGS

COMPONENTS (UNLESS OTHERWISE INDICATED)

	TOLERANCE	VALUE	SIZE
RESISTORS			
CAPACITORS			

TITLE
A REGISTER
BITS 24 THRU 35

CONTROL DATA CORPORATION

PROJECT OR PRODUCT
1604-A

DRAWING NUMBER
XDP 214595

REV

PAGE
47.3

TERM	LOCATION	PAGE	QUAD.	DEFINITION
N302	2J63B			$A^1 \rightarrow A^2$
N303	2J60B			$A^2 \rightarrow A^1$
N312	2J64B			A Right Shift
N313	2J62B			$Q^2 \rightarrow A^1$
N316	2K64B			Left Shift A
N323	2J61B			Add X^2 to A^1
N402	2M63B			$A^1 \rightarrow A^2$
N403	2M65B			$A^2 \rightarrow A^1$
N412	2M62B			A Right Shift
N413	2M64B			$Q^2 \rightarrow A^1$
N416	2M61B			Left Shift A
N423	2M68B			Add X^2 to A^1
N502	2P69B			$A^1 \rightarrow A$
N503	2P72B			$A^2 \rightarrow A$
N512	2O71B			A Right Shift
N513	2P70B			$Q^2 \rightarrow A^1$
N516	2O70B			Left Shift A
N523	2P71B			Add X^2 to A^1
W816	2O44B			Clear A
W817	2O62B			

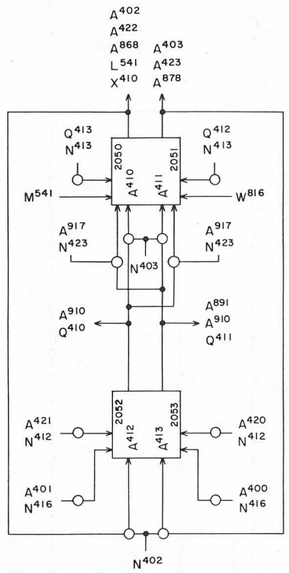

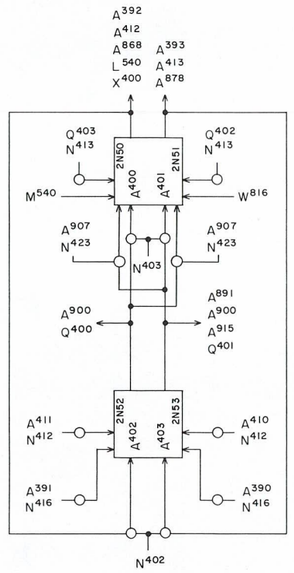

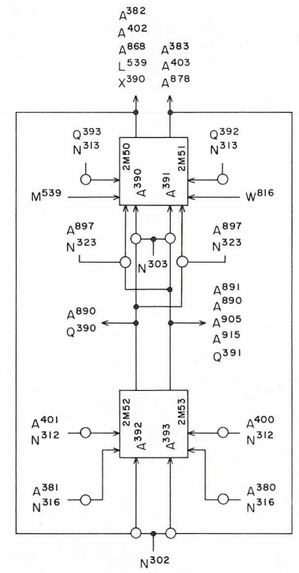

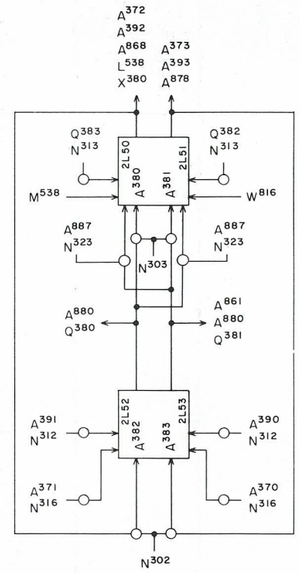

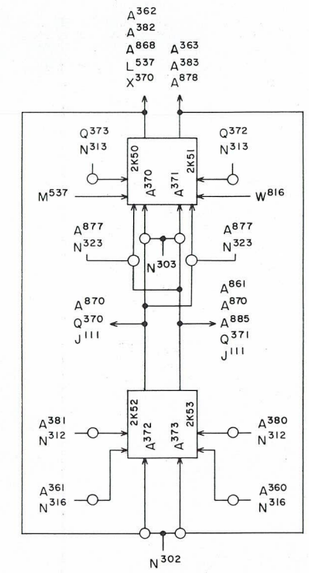

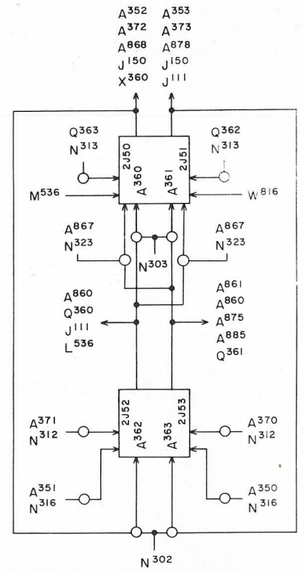

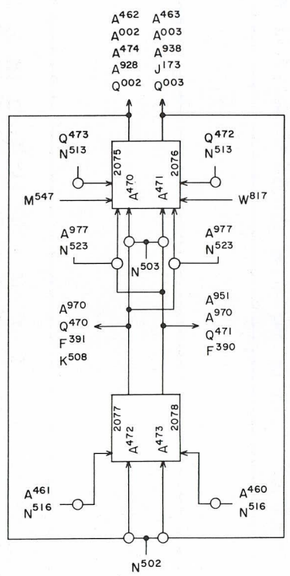

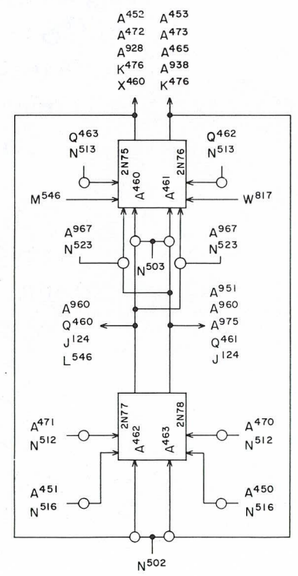

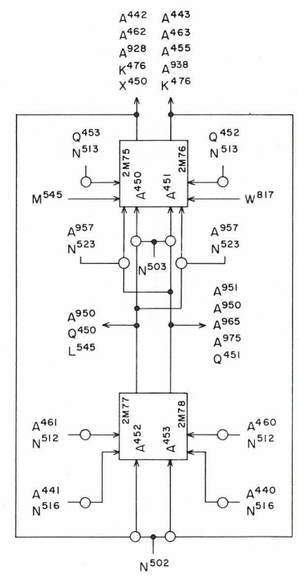

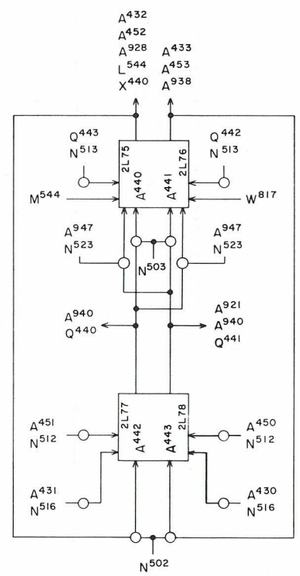

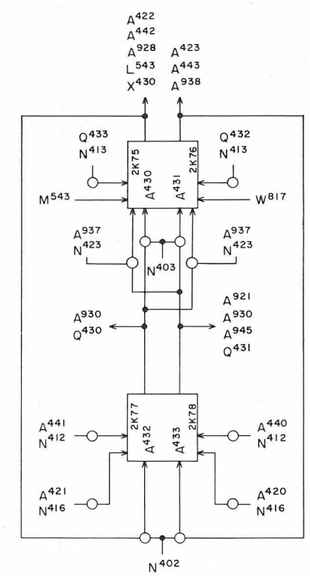

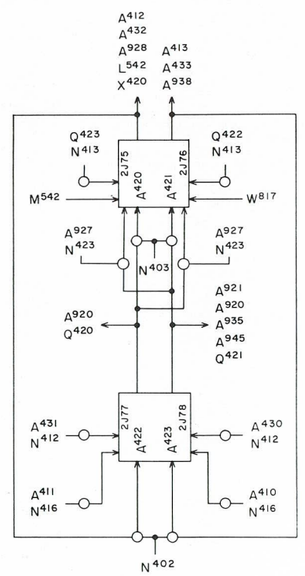

REV.	APPR.	DATE	REQ.	SUPR.	ENG.	APPROVED
REVISIONS						
APPROVED						
CHECKED						
DRAWN	J. R. R. M.					9-7-62
DESIGNED						

REFERENCE DRAWINGS

COMPONENTS (UNLESS OTHERWISE INDICATED)

	TOLERANCE	VALUE	SIZE
RESISTORS			
CAPACITORS			

TITLE

A REGISTER BITS 36 THRU 47

CONTROL DATA CORPORATION

PROJECT OR PRODUCT 1604-A

DRAWING NUMBER XDP 214596 REV

PAGE 47.4

TERM	LOCATION	PAGE	QUAD.	DEFINITION
F678	1H83A			06
F679	1H83C			$\overline{06}$
N004	1M01B			$Q^1 \rightarrow Q^2$
N005	1K01B			$Q^2 \rightarrow Q^1$
N015	1L01B			$A^2 \rightarrow Q^1$
N020	1N01B			Right Shift Q
N024	1J21B			Left Shift Q
N104	1N23B			$Q^1 \rightarrow Q^2$
N105	1M20B			$Q^2 \rightarrow Q^1$
N115	1N24B			$A^2 \rightarrow Q^1$
N120	1L25B			Right Shift Q
N124	1K25B			Left Shift Q
N204	1M41B			$Q^1 \rightarrow Q^2$
N205	1M39B			$Q^2 \rightarrow Q^1$
N215	1M40B			$A^2 \rightarrow Q^1$
N220	1O25B			Right Shift Q
N224	1O24B			Left Shift Q
N624	1H84C			Connect Q_{47} to Q_{00}
N930	3J76A			Even Clock Slave
W800	1O15B		}	Clear Q
W801	1O43B		}	

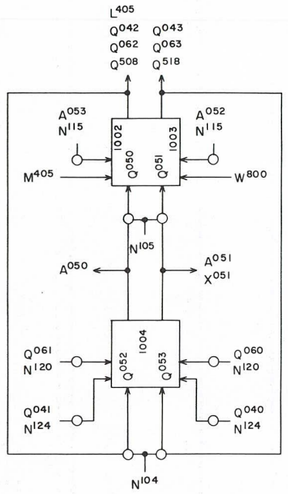

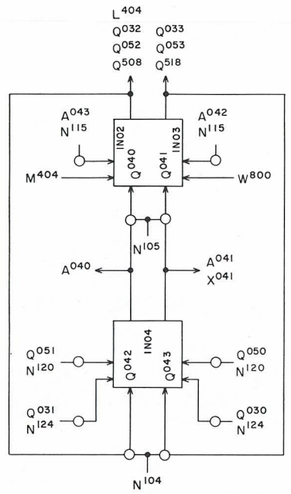

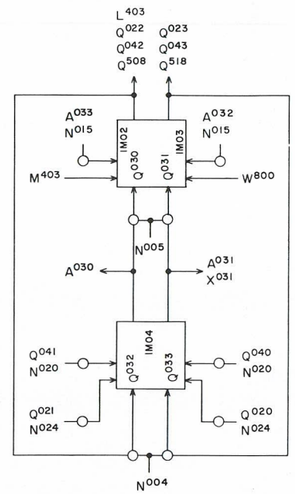

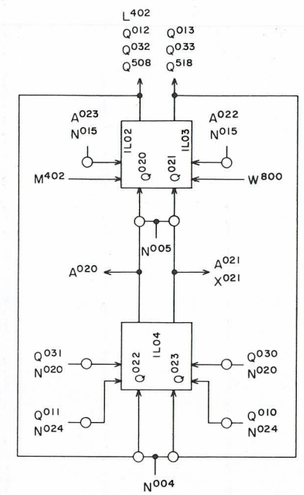

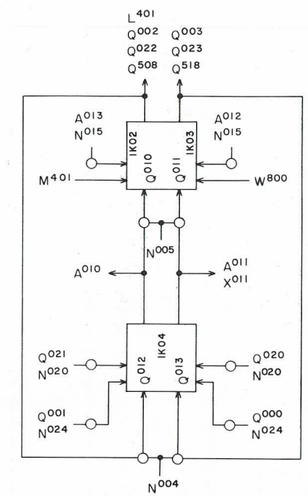

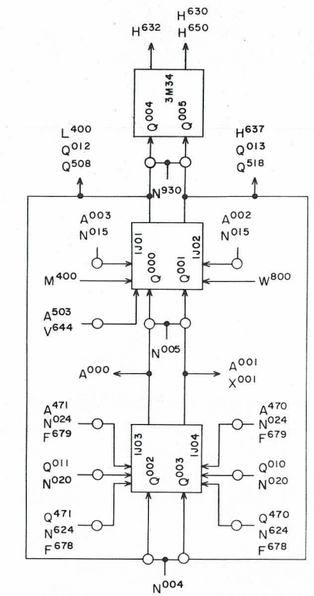

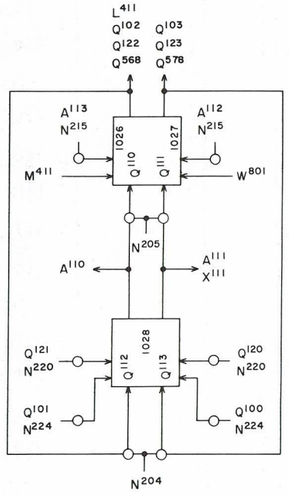

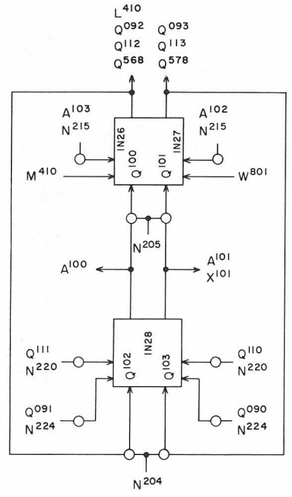

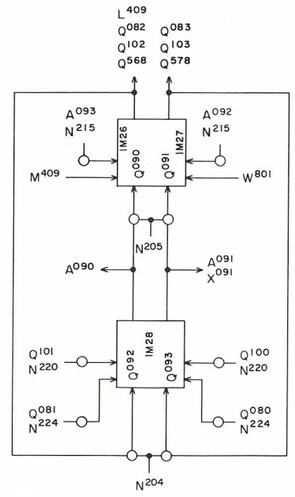

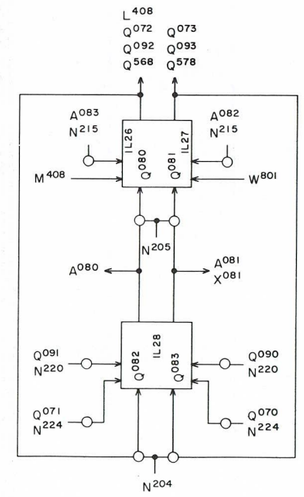

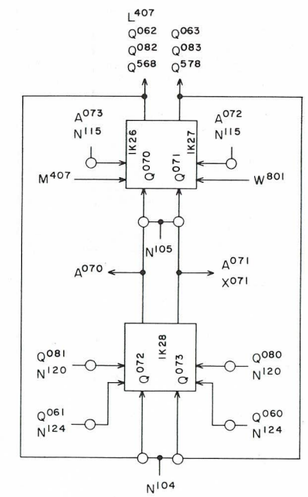

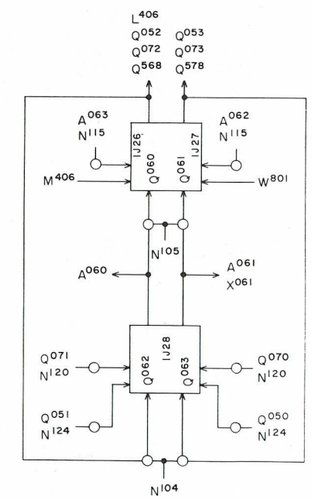

REV.	AUTH.	DATE	REQ. DEPT.	CHG.	APPROVED
REVISIONS					
APPROVED					
CHECKED					
DRAWN	I. R. R. M.				9-7-62
DESIGNED					

REFERENCE DRAWINGS

COMPONENTS (UNLESS OTHERWISE INDICATED)

	TOLERANCE	VALUE	SIZE
RESISTORS			
CAPACITORS			

TITLE

Q REGISTER BITS 00 THRU 11

CONTROL DATA CORPORATION

PROJECT OR PRODUCT: 1604-A

DRAWING NUMBER: XDP 214597 REV

TERM	LOCATION	PAGE	QUAD.	DEFINITION
N304	1M46B			$Q^1 \rightarrow Q^2$
N305	1L63B			$Q^2 \rightarrow Q^1$
N315	1J46B			$A^2 \rightarrow Q^1$
N320	1J65B			Right Shift Q
N324	1J45B			Left Shift Q
N404	1L68B			$Q^1 \rightarrow Q^2$
N405	1M60B			$Q^2 \rightarrow Q^1$
N415	1L64B			$A^2 \rightarrow Q^1$
N420	1M69B			Right Shift Q
N424	1N60B			Left Shift Q
N504	1O69B			$Q^1 \rightarrow Q^2$
N505	1N71B			$Q^2 \rightarrow Q^1$
N515	1N70B			$A^2 \rightarrow Q^1$
N520	1N69B			Right Shift Q
N524	1N68B			Left Shift Q
W802	1O46B			Clear Q
W803	1O63B			

TERM	LOCATION	PAGE	QUAD.	DEFINITION

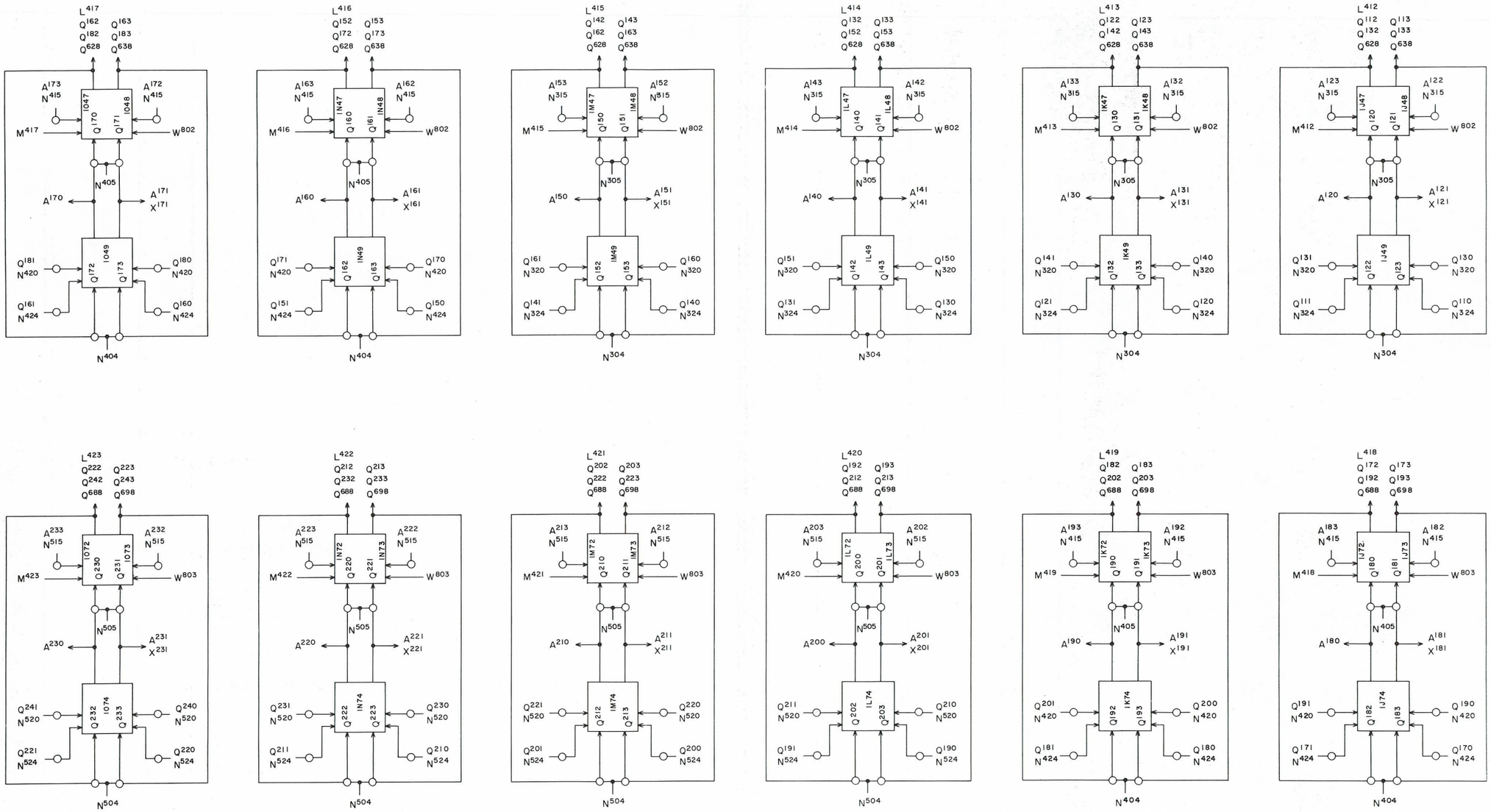

REV.	AUTH.	DATE	REQ.	DRW.	CHK.	APPROVED

REVISIONS

APPROVED :
CHECKED :
DRAWN : R. R. M. 9-10-62
DESIGNED :

REFERENCE DRAWINGS

COMPONENTS (UNLESS OTHERWISE INDICATED)

	TOLERANCE	VALUE	SIZE
RESISTORS			
CAPACITORS			

TITLE
Q REGISTER
BITS 12 THRU 23

CONTROL DATA CORPORATION

PROJECT OR PRODUCT
1604-A

DRAWING NUMBER
XDP 214598

REV
H

PAGE
47.6

TERM	LOCATION	PAGE	QUAD.	DEFINITION
N006	2M01B			$Q^1 \rightarrow Q^2$
N007	2K01B			$Q^2 \rightarrow Q^1$
N017	2L01B			$A^2 \rightarrow Q^1$
N022	2N01B			Right Shift Q
N026	2J21B			Left Shift Q
N106	2N23B			$Q^1 \rightarrow Q^2$
N107	2M20B			$Q^2 \rightarrow Q^1$
N117	2N24B			$A^2 \rightarrow Q^1$
N122	2L25B			Right Shift Q
N126	2K25B			Left Shift Q
N206	2M41B			$Q^1 \rightarrow Q^2$
N207	2M39B			$Q^2 \rightarrow Q^1$
N217	2M40B			$A^2 \rightarrow Q^1$
N222	2O25B			Right Shift Q
N226	2O24B			Left Shift Q
W804	2O15B		}	Clear Q
W805	2O43B		}	

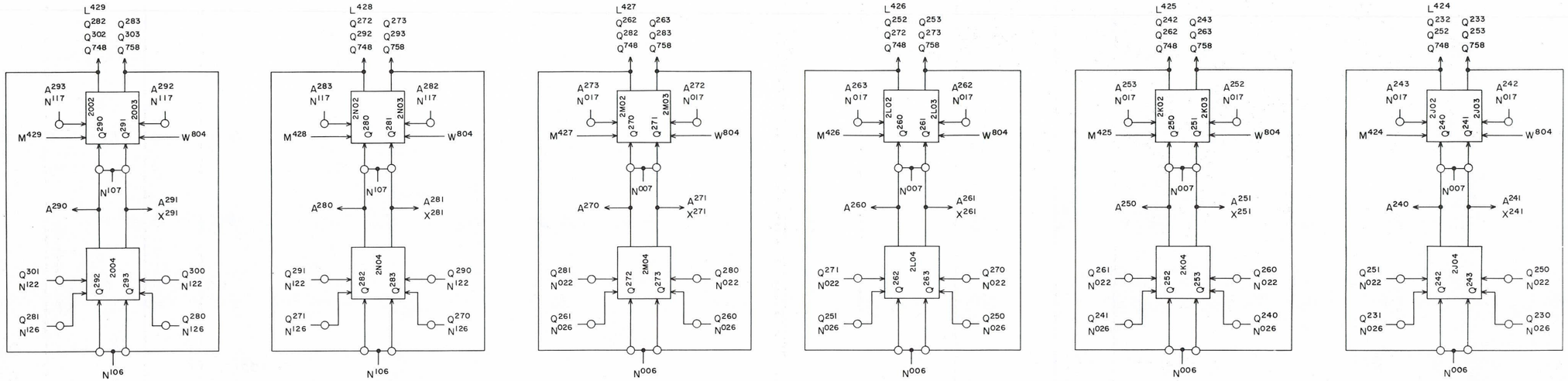

REV.	AUTH.	DATE	REVISIONS	APPROVED	CHECKED	DRAWN	DESIGNED
						R. R. M.	9-10-62

REFERENCE DRAWINGS

COMPONENTS (UNLESS OTHERWISE INDICATED)

	TOLERANCE	VALUE	SIZE
RESISTORS			
CAPACITORS			

TITLE

Q REGISTER BITS 24 THRU 35

CONTROL DATA CORPORATION

PROJECT OR PRODUCT: 1604-A

DRAWING NUMBER: XDP 214599 REV

TERM	LOCATION	PAGE	QUAD.	DEFINITION
F002	6O03B	19	0	f = _2
F110	6K05C	19	0	f = 0_
N306	2M46B			$Q^1 \rightarrow Q^2$
N307	2L63B			$Q^2 \rightarrow Q^1$
N317	2J46B			$A^2 \rightarrow Q^1$
N322	2J65B			Right Shift Q
N326	2J45B			Left Shift Q
N406	2L68B			$Q^1 \rightarrow Q^2$
N407	2M60B			$Q^2 \rightarrow Q^1$
N417	2L64B			$A^2 \rightarrow Q^1$
N422	2M69B			Right Shift Q
N426	2N60B			Left Shift Q
N506	2O69B			$Q^1 \rightarrow Q^2$
N507	2N71B			$Q^2 \rightarrow Q^1$
N512	2O71B			Connect A_{00} to Q_{47}
N517	2N70B			$A^2 \rightarrow Q^1$
N522	2N69B			Right Shift Q
N526	2N68B			Left Shift Q
W806	2O46B			} Clear Q
W807	2O63B			

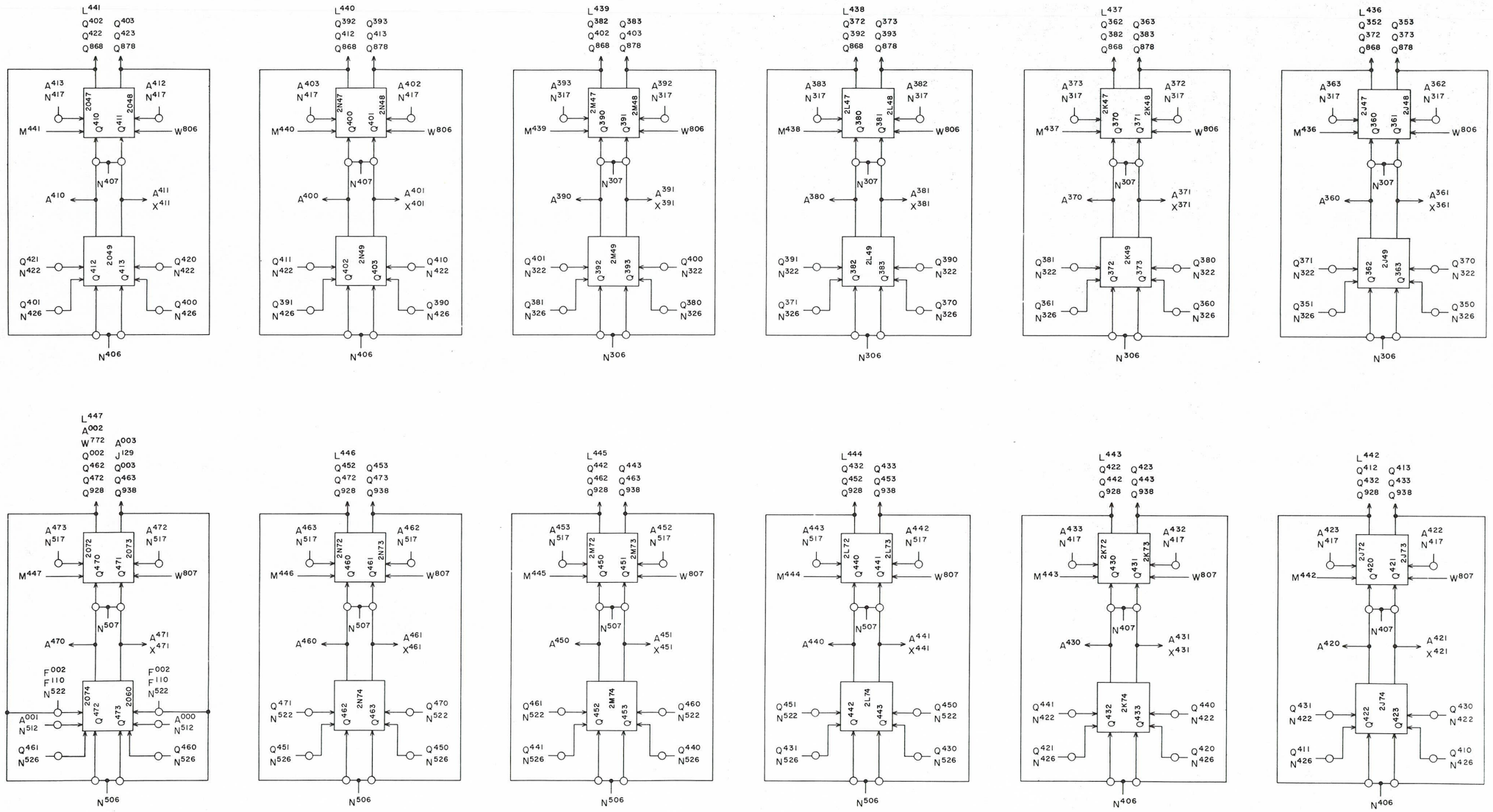

REV.	AUTH.	DATE	SEQ.	DRW.	CHK.	APPROVED

REVISIONS

APPROVED :
CHECKED :
DRAWN : R.R.M. 9-11-62
DESIGNED :

REFERENCE DRAWINGS

COMPONENTS (UNLESS OTHERWISE INDICATED)

	TOLERANCE	VALUE	SIZE
RESISTORS			
CAPACITORS			

TITLE
Q REGISTER
BITS 36 THRU 47

CONTROL DATA CORPORATION

PROJECT OR PRODUCT
1604-A

DRAWING NUMBER
XDP 214600

REV

PAGE
47.8

STAGE TOGGLE CONTROL

STAGE NO-BORROW INPUT

STAGE BORROW INPUT

GROUP BORROW INPUT

SECTION BORROW INPUT

SECTION BORROW GENERATION

SECTION BORROW ENABLE

GROUP BORROW GENERATION

GROUP BORROW ENABLE

STAGE BORROW ENABLE

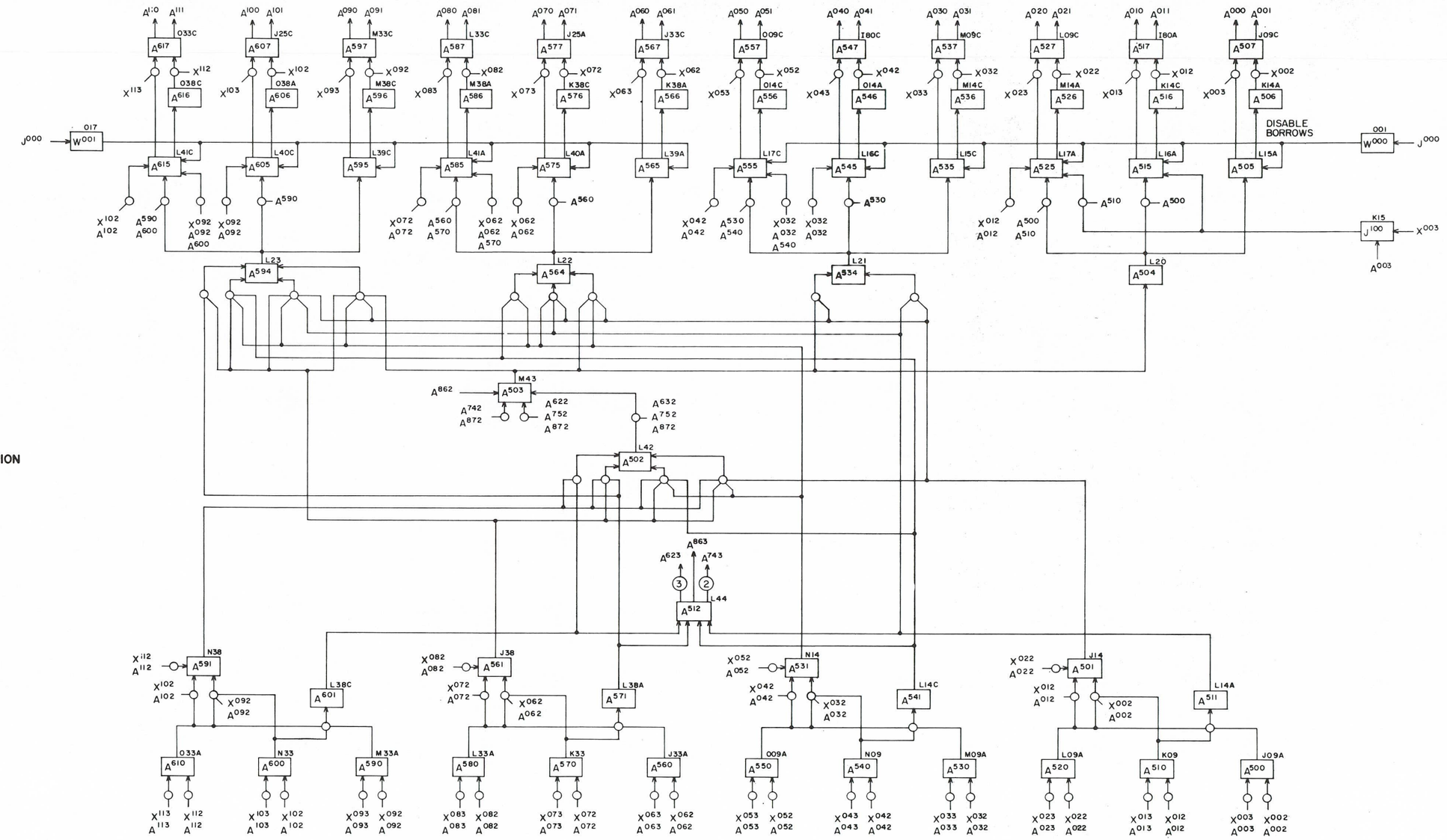

NOTE:
ALL JACKS ON CHASSIS 1
UNLESS OTHERWISE SHOWN.

REV.	INITIAL	DATE	REVISIONS	APPROVED	CHKD.	APPROVED

APPROVED		3-19-60
CHECKED	R. MILLER	3-30-60
DRAWN	S. ASCHENBRENNER	11-22-60

REFERENCE DRAWINGS

COMPONENTS (UNLESS OTHERWISE INDICATED)

	TOLERANCE	VALUE	BASE
RESISTORS			
CAPACITORS			

CONTROL DATA CORPORATION

PROJECT OR PRODUCT: 1604-A

TITLE: LOGIC DIAGRAM ACCUMULATOR BORROW PYRAMID — SECTION 1

DRAWING NUMBER: XDP 214579 REV.

1 OF 4 PAGE 48.0

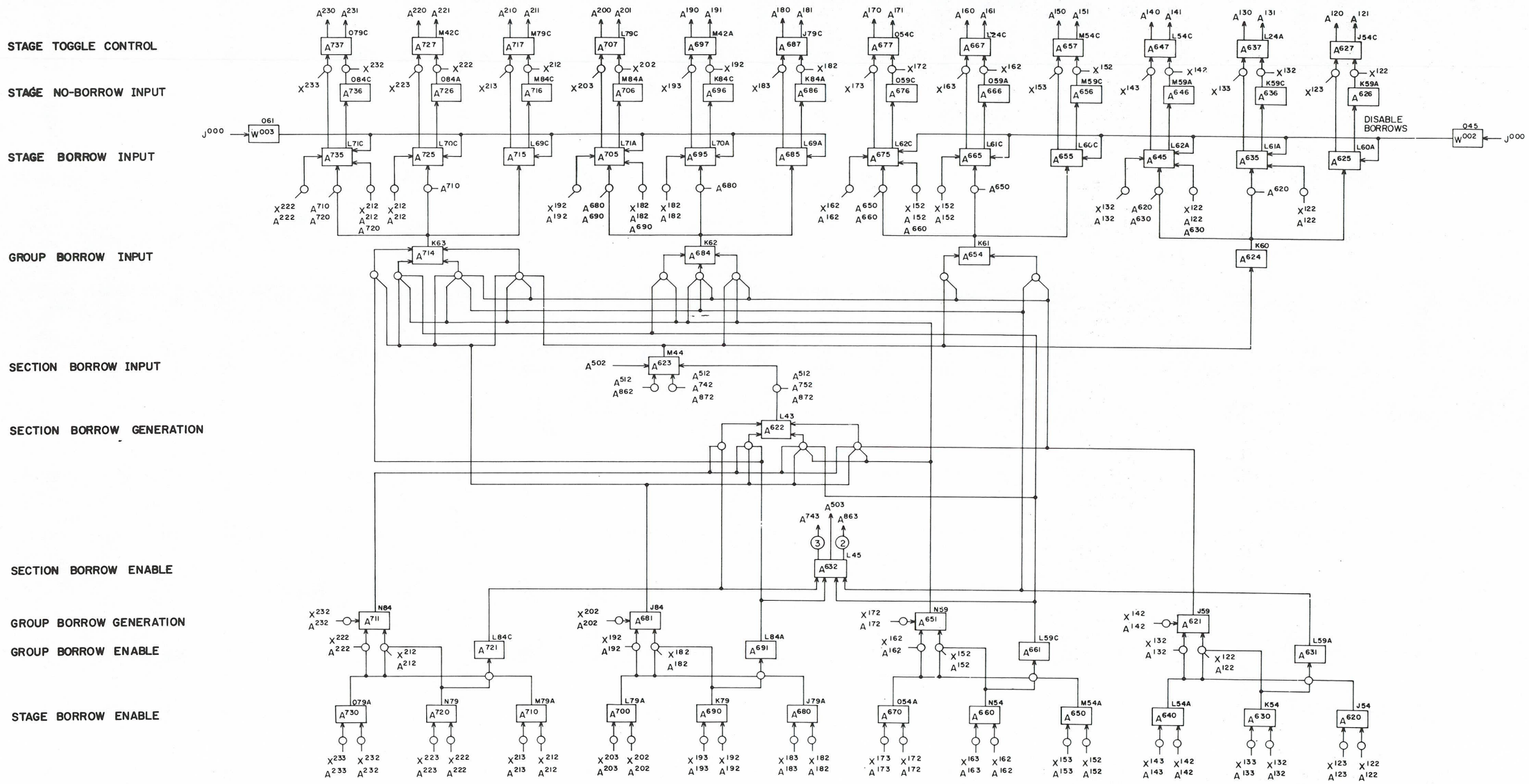

NOTE:
ALL JACKS ON CHASSIS 1
UNLESS OTHERWISE SHOWN.

REFERENCE DRAWINGS	
COMPONENTS (UNLESS OTHERWISE INDICATED)	
TOLERANCE / VALUE / SIZE	
RESISTORS	
CAPACITORS	
DRAWN	R. MILLER 3-31-60
DESIGNED	S. ASCHENBRENNER 1-25-60
TITLE	LOGIC DIAGRAM ACCUMULATOR BORROW PYRAMID — SECTION 2

CONTROL DATA CORPORATION

PROJECT OR PROJECT: 1604-A

DRAW: XDP 214572

2 OF 4 | PAGE 48.1

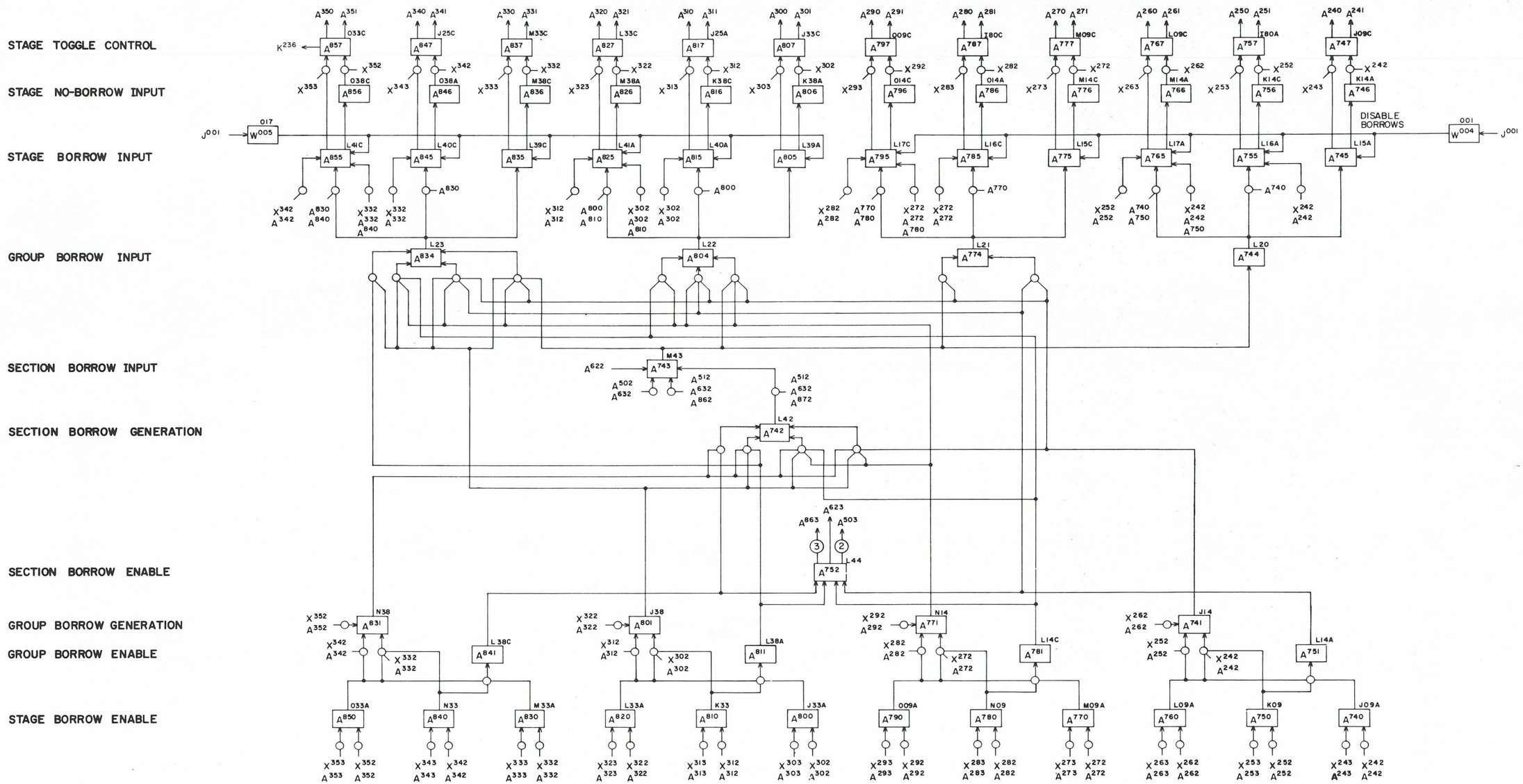

NOTE:
ALL JACKS ON CHASSIS 2
UNLESS OTHERWISE SHOWN.

REFERENCE DRAWINGS	
DRAWN	R. MILLER 4-11-60
DESIGNED	S. ASCHENBRENNER 2-11-60
TITLE	LOGIC DIAGRAM ACCUMULATOR BORROW PYRAMID — SECTION 3
CONTROL DATA CORPORATION	
PROJECT OR PRODUCT	1604-A
DRAWING NUMBER	XDP 214575
REV	
PAGE	3 OF 4 48.2

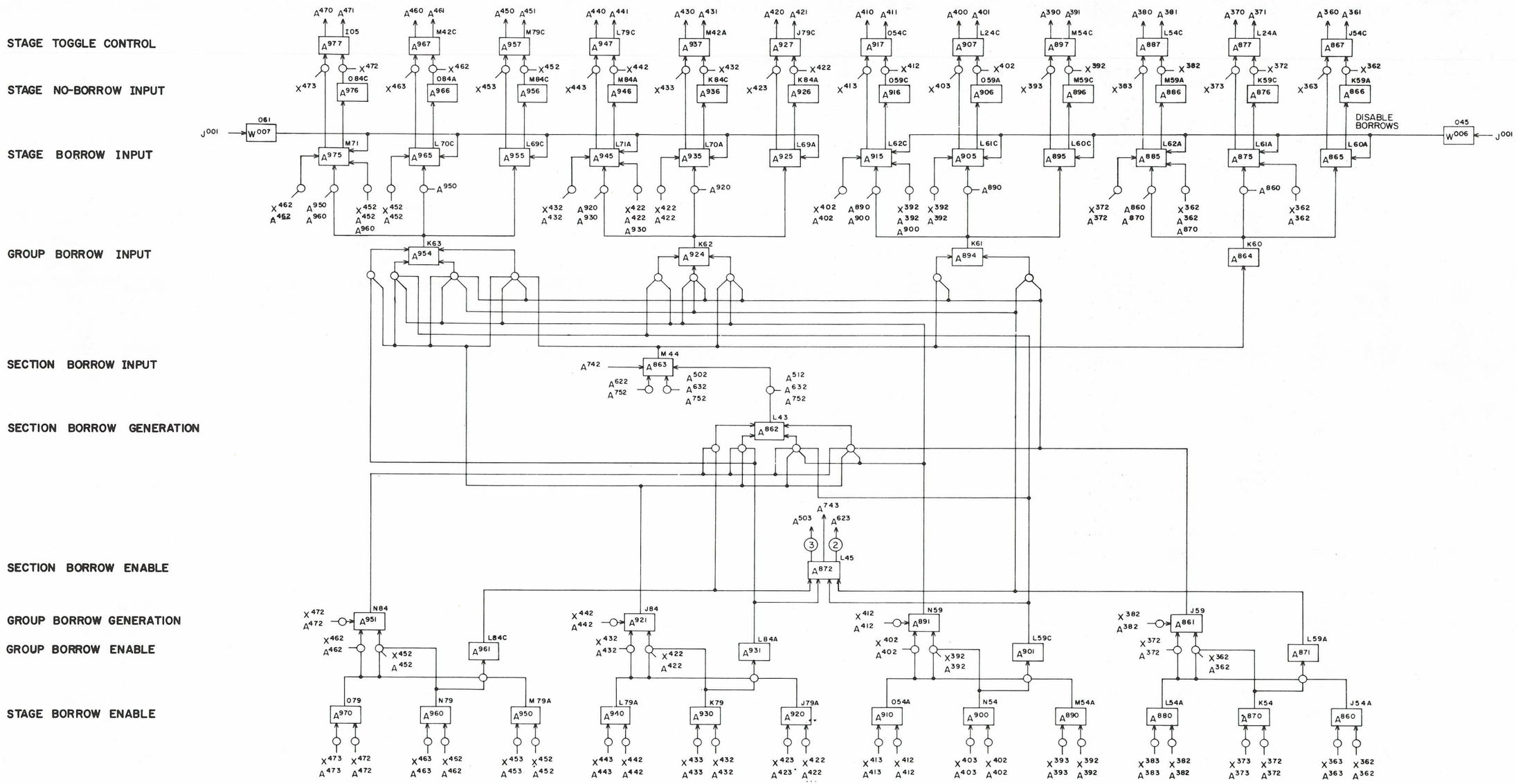

NOTE:
ALL JACKS ON CHASSIS 2
UNLESS OTHERWISE SHOWN.

REFERENCE DRAWINGS	
TITLE	LOGIC DIAGRAM ACCUMULATOR BORROW PYRAMID — SECTION 4
DRAWN	R. MILLER 4-12-60
DESIGNED	S. ASCHENBRENNER 2-8-60
CONTROL DATA CORPORATION	
PROJECT OR PRODUCT	1604-A
DRAWING NUMBER	XDP 214576
PAGE	4 OF 4 — 48.3

RANK X^1

48 STAGES

X^{000}/X^{001} THROUGH X^{470}/X^{471}

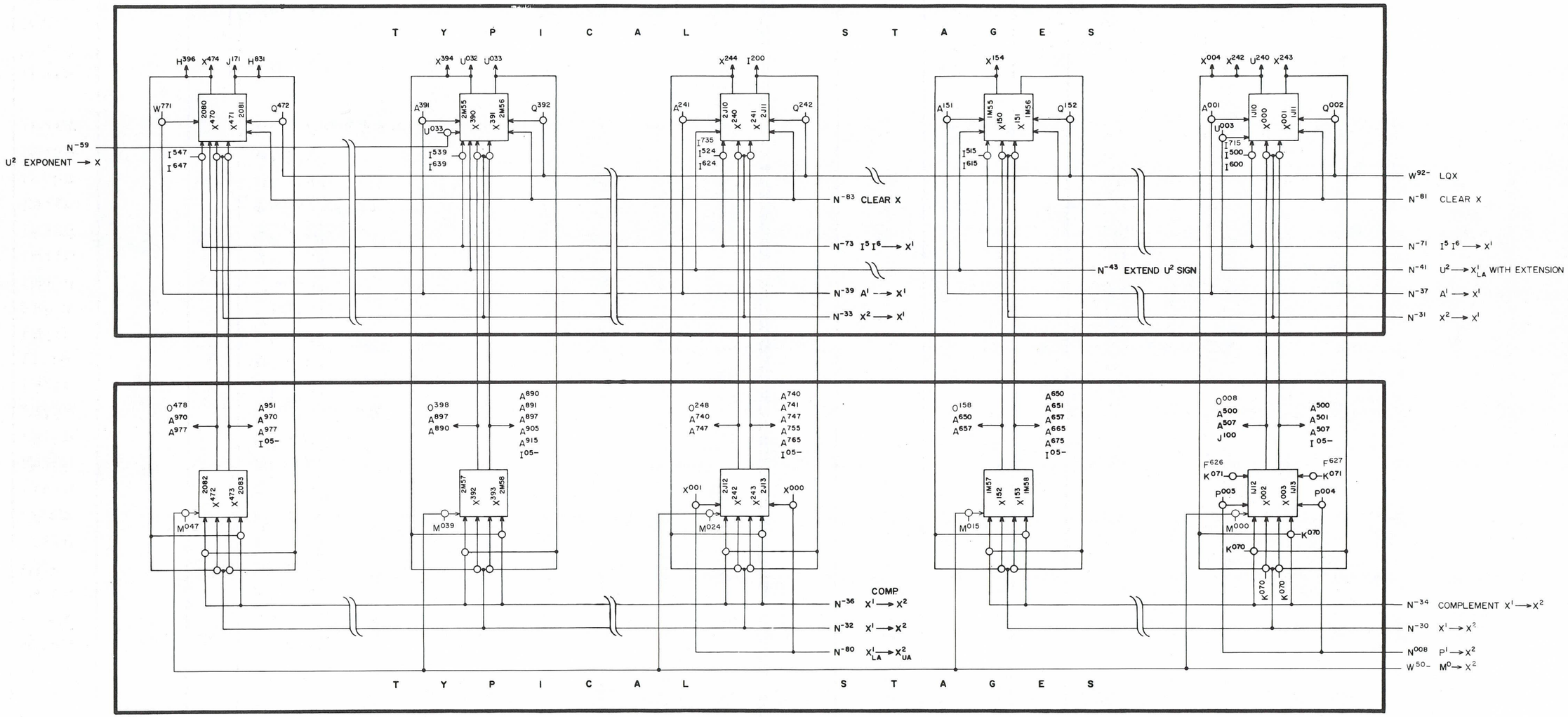

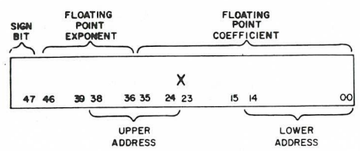

RANK X^2

48 STAGES

X^{002}/X^{003} THROUGH X^{472}/X^{473}

REV.	AUTH.	DATE	REVISIONS	APPROVED	CHK.	APPROVED
						4-7-60
				CHECKED	D.W.S.	4-7-60
				DRAWN	E.A.B.	2-12-60
				DESIGNED	S.E.A.	

REFERENCE DRAWINGS

COMPONENTS (UNLESS OTHERWISE INDICATED)

	TOLERANCE	VALUE	SIZE
RESISTORS			
CAPACITORS			

TITLE

X REGISTER

CONTROL DATA CORPORATION

PROJECT NO. PRODUCT 1604-A

DRAWING NUMBER XDP 214552 REV. C

PAGE 49.0

TERM	LOCATION	PAGE	QUAD.	DEFINITION
F626	4M81A	19.5	0	72 + (30 - 33) (A Pos.) + Adv. Clock
F627	4M81C	19.5	0	73 + (30 - 33) (A Neg.)
K070	4O71	14	0	Set X^2 to 1 FF
K071	4N71	14	0	
N030	1J23B			$X^1 \rightarrow X^2$
N031	1K22B			$X^2 \rightarrow X^1$
N034	1J24B			Comp. $X^1 \rightarrow X^2$
N037	1N16B			$A^1 \rightarrow X^1$
N041	1O20B			$U^2 \rightarrow X^1$
N068	1K23B			$P^1 \rightarrow X^2$
N071	1J22B			$I^5I^6I^7 \rightarrow X^1$
N081	1K24B			Clear X
N130	1N20B			$X^1 \rightarrow X^2$
N131	1N17B			$X^2 \rightarrow X^1$
N134	1N15B			Comp. $X^1 \rightarrow X^2$
N137	1N22B			$A^1 \rightarrow X^1$
N141	1J41B			$U^2 \rightarrow X^1$
N168	1N21B			$P^1 \rightarrow X^2$
N171	1J39B			$I^5I^6I^7 \rightarrow X^1$
N181	1N42B			Clear X
N230	1N43B			$X^1 \rightarrow X^2$
N231	1N39B			$X^2 \rightarrow X^1$
N234	1N44B			Comp. $X^1 \rightarrow X^2$
N241	1P50B			$U^2 \rightarrow X^1$
N268	1N45B			$P^1 \rightarrow X^2$
N910	1P24A			Even Clock Slave
W500	7P21B			$M^0 \rightarrow X^2$
W501	7P22B			
W920	1O21B			$Q^2 \rightarrow X^1$
W921	1P38B			

TERM	LOCATION	PAGE	QUAD.	DEFINITION

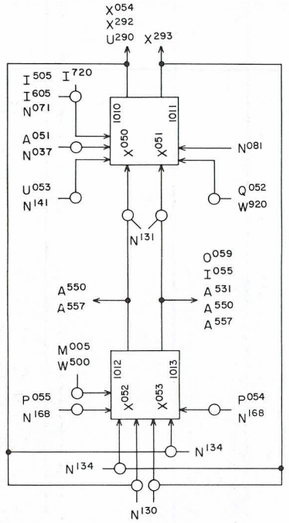

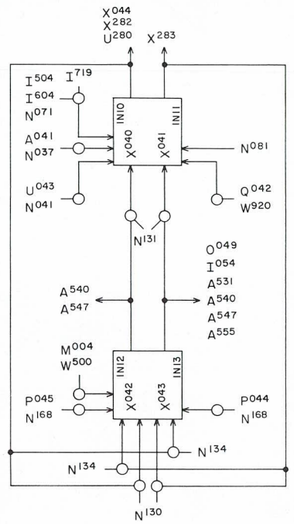

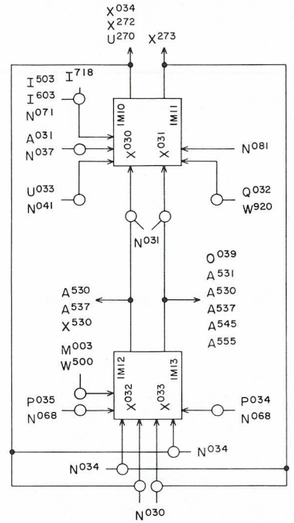

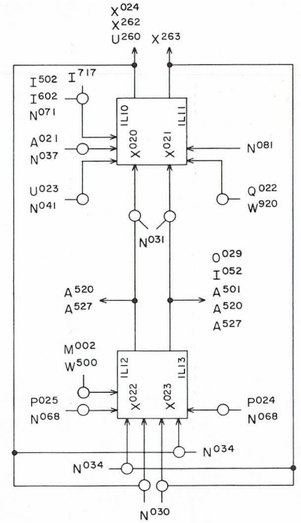

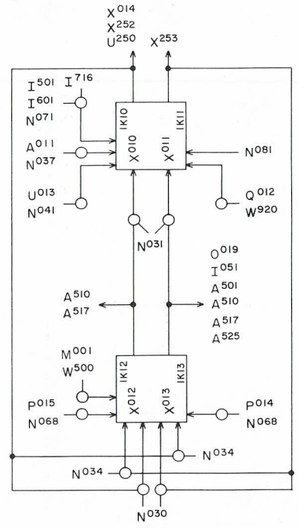

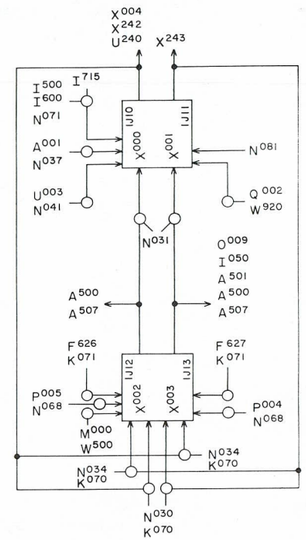

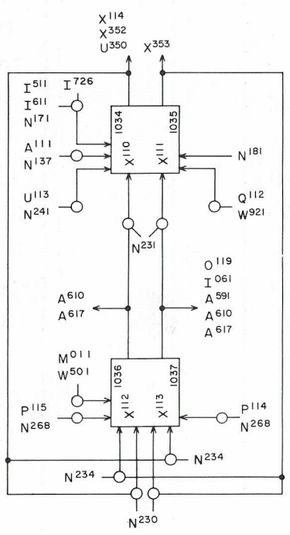

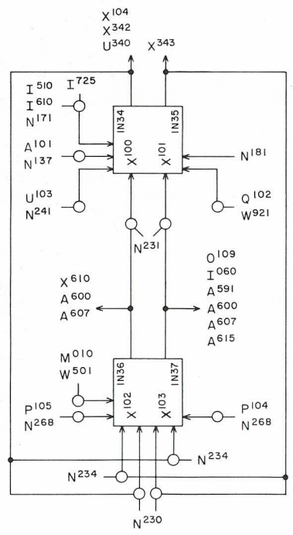

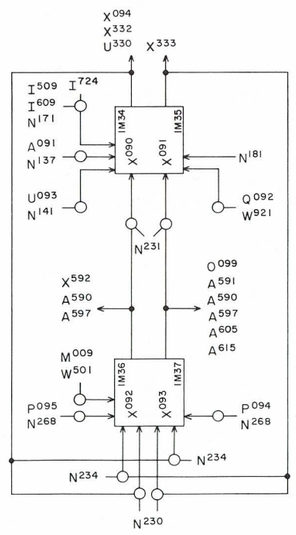

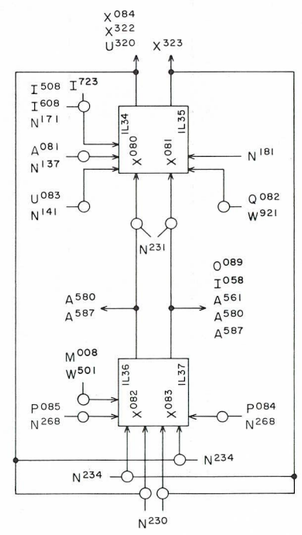

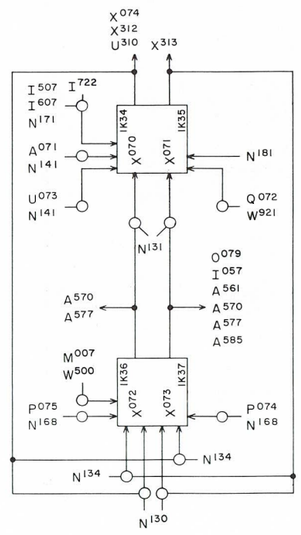

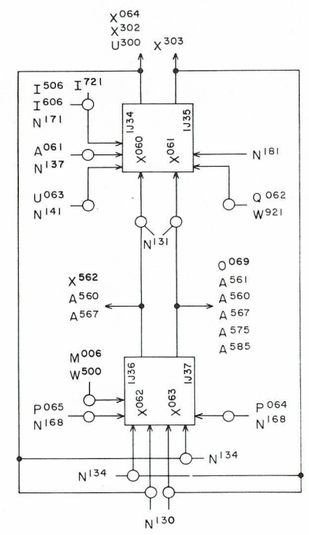

REV.	APPR.	DATE	DES. SUPR.	CHK.	APPROVED
REVISIONS					

APPROVED -
CHECKED -
DRAWN - R.M. / E.S. 9-5-62
DESIGNED -

REFERENCE DRAWINGS

COMPONENTS (UNLESS OTHERWISE INDICATED)

	TOLERANCE	VALUE	SIZE
RESISTORS			
CAPACITORS			

TITLE
X REGISTER BITS 00 THRU 11

CONTROL DATA CORPORATION

PROJECT OR PRODUCT
1604-A

DRAWING NUMBER
XDP 214601

REV
A

PAGE
49.1

TERM	LOCATION	PAGE	QUAD.	DEFINITION
N237	1N46B			$A^1 \rightarrow X^1$
N241	1P50B			$U^2 \rightarrow X^1$
N271	1J68B			$I^5 I^6 I^7 \rightarrow X^1$
N281	1N61B			Clear X
N330	1K65B			$X^1 \rightarrow X^2$
N331	1M45B			$X^2 \rightarrow X^1$
N334	1J42B			Comp. $X^1 \rightarrow X^2$
N337	1N65A			$A^1 \rightarrow X^1$
N368	1J69B			$P^1 \rightarrow X^2$
N371	1J71B			$I^5 I^6 I^7 \rightarrow X^1$
N381	1O65B			Clear X
N430	1N64B			$A^1 \rightarrow A^2$
N431	1M70B			$A^2 \rightarrow A^1$
N434	1N62B			Comp. $X^1 \rightarrow X^2$
N443	1O23B			Extend U^2 Sign
N530	1P68B			$X^1 \rightarrow X^2$
N531	1O68B			$X^2 \rightarrow X^1$
N534	1O64B			Comp. $X^1 \rightarrow X^2$
N543	1N63B			Extend U^2 Sign
W501	7P22B			$M^0 \rightarrow X^2$
W502	7P23B			
W922	1P49B			$Q^2 \rightarrow X^1$
W923	1P63B			

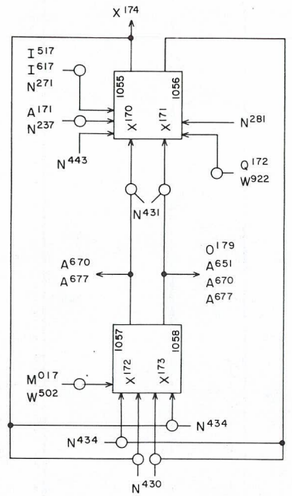

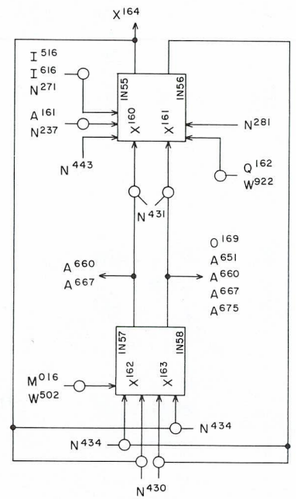

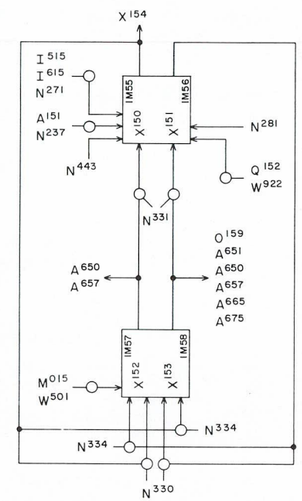

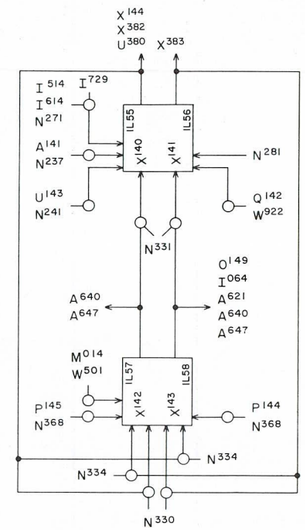

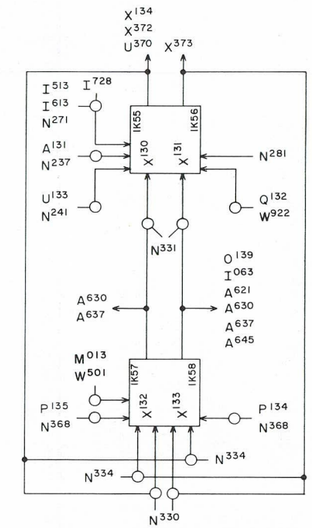

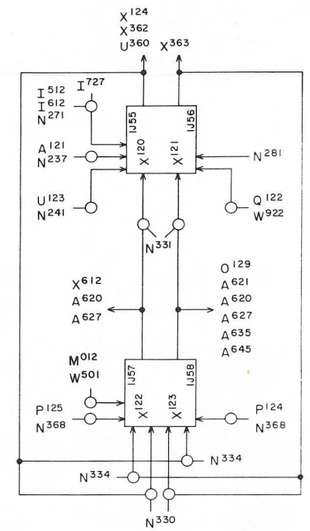

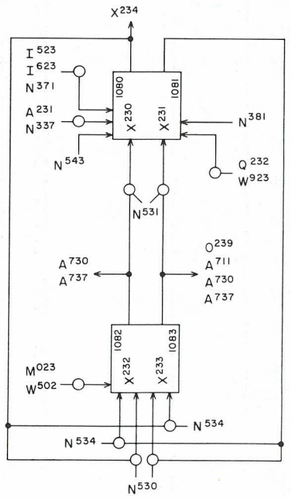

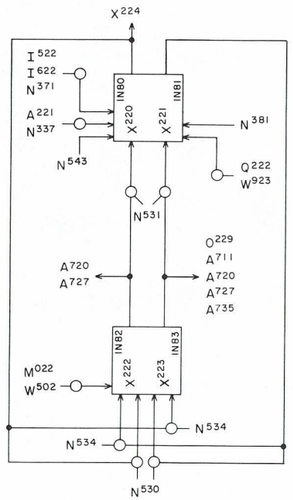

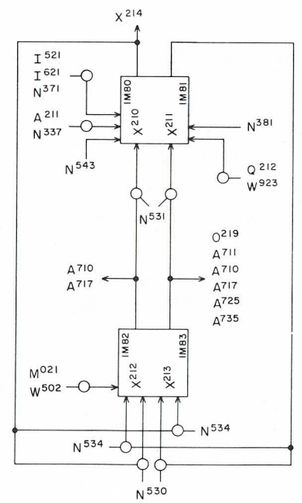

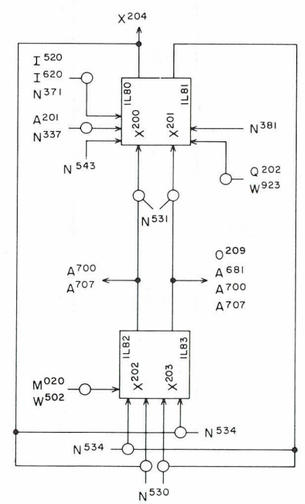

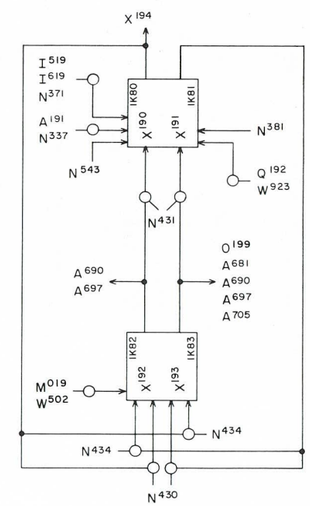

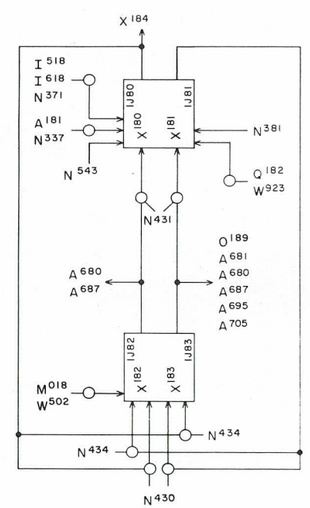

KEY	AUTH.	DATE	REVISIONS	ENGR.	CHK.	APPROVED
			-			

APPROVED
CHECKED
DRAWN - R.M./E.S. 9-11-62
DESIGNED

REFERENCE DRAWINGS

COMPONENTS (UNLESS OTHERWISE INDICATED)

	TOLERANCE	VALUE	SIZE
RESISTORS			
CAPACITORS			

TITLE

X REGISTER BITS 12 THRU 23

CONTROL DATA CORPORATION

PROJECT OR PRODUCT
1604-A

DRAWING NUMBER
XDP 214602

REV

PAGE
49.2

TERM	LOCATION	PAGE	QUAD.	DEFINITION
N032	2J23B			$X^1 \rightarrow X^2$
N033	2K22B			$X^2 \rightarrow X^1$
N036	2J24B			Comp. $X^1 \rightarrow X^2$
N039	2N16B			$A^1 \rightarrow X^1$
N043	2O20B			Extend U^2 Sign
N073	2J22B			$I^5I^6I^7 \rightarrow X^1$
N080	2K23B			$X^1_{LA} \rightarrow X^2_{UA}$
N083	2K24B			Clear X
N132	2N20B			$X^1 \rightarrow X^2$
N133	2N17B			$X^2 \rightarrow X^1$
N136	2N15B			Comp. $X^1 \rightarrow X^2$
N139	2N22B			$A^1 \rightarrow X^1$
N173	2J39B			$I^5I^6I^7 \rightarrow X^1$
N180	2N21B			$X^1_{LA} \rightarrow X^2_{UA}$
N183	2N42B			Clear X
N232	2N43B			$X^1 \rightarrow X^2$
N233	2N39B			$X^2 \rightarrow X^1$
N236	2N44B			Comp. $X^1 \rightarrow X^2$
N243	2J41B			Extend U^2 Sign
N280	2N45B			$X^1_{LA} \rightarrow X^2_{UA}$
W503	7P50B			$M^0 \rightarrow X^2$
W504	7P51B			
W924	2O21B			$Q^2 \rightarrow X^1$
W925	2P38B			

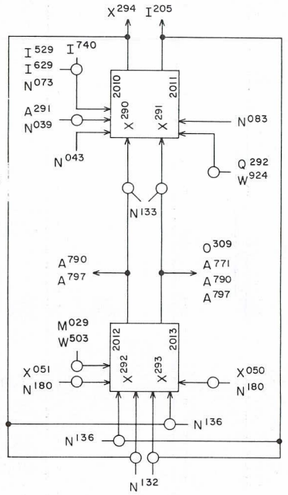

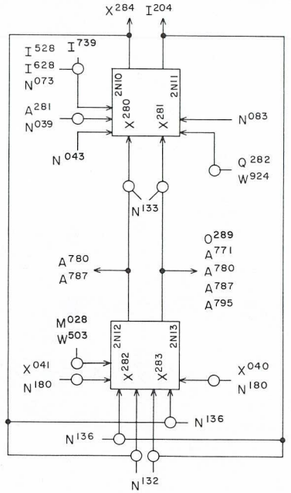

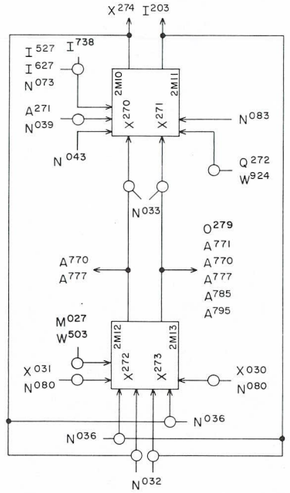

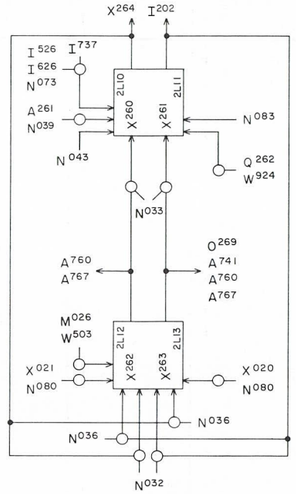

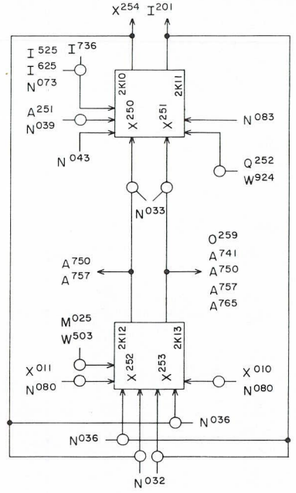

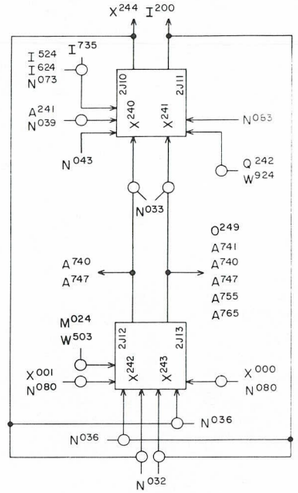

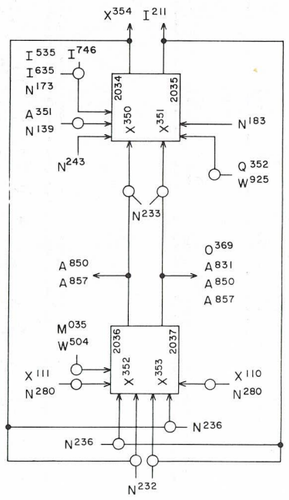

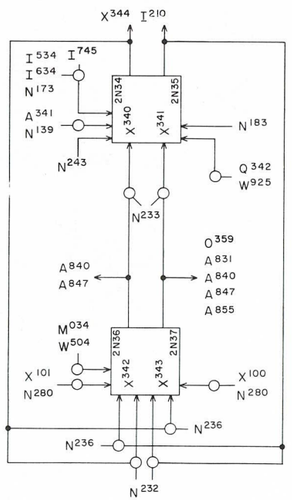

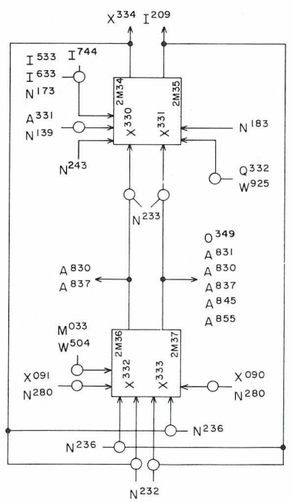

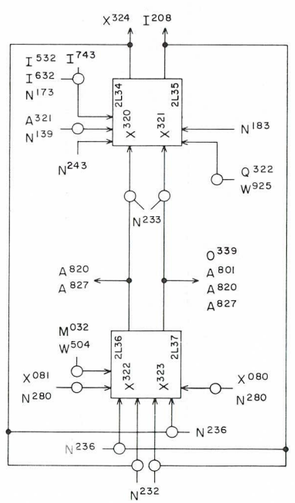

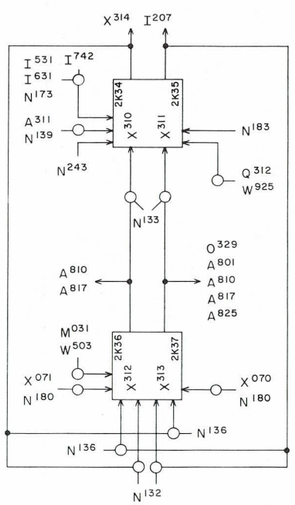

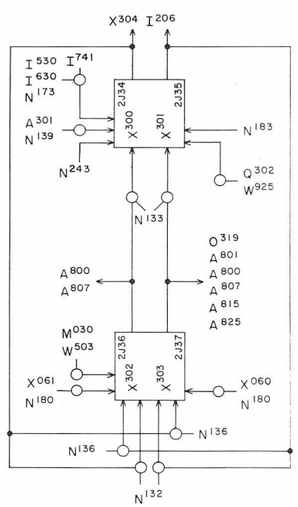

REV.	AUTH.	DATE	REL. DRW.	CHK.	APPROVED
REVISIONS					
APPROVED					
CHECKED					9-12-62
DRAWN			R.M./E.S.		
DESIGNED					

REFERENCE DRAWINGS

COMPONENTS (UNLESS OTHERWISE INDICATED)

	TOLERANCE	VALUE	SIZE
RESISTORS			
CAPACITORS			

TITLE

X REGISTER
BITS 24 THRU 35

CONTROL DATA CORPORATION

PROJECT OR PRODUCT
1604-A

DRAWING NUMBER
XDP 214603

REV
—

PAGE
49.3

TERM	LOCATION	PAGE	QUAD.	DEFINITION
N059	2P47B			$U^2_{exp} \rightarrow X^1$
N143	2O23B			Extend U^2 Sign
N159	2P51B			$U^2_{exp} \rightarrow X^1$
N239	2N46B			$A^1 \rightarrow X^1$
N273	2J68B			$I^5I^6I^7 \rightarrow X^1$
N283	2N61B			Clear X
N332	2K65B			$X^1 \rightarrow X^2$
N333	2M45B			$X^2 \rightarrow X^1$
N336	2J42B			Comp. $X^1 \rightarrow X^2$
N339	2N65A			$A^1 \rightarrow X^1$
N343	2P50B			Extend U^2 Sign
N373	2J71B			$I^5I^6I^7 \rightarrow X^1$
N383	2O65B			Clear X
N432	2N64B			$X^1 \rightarrow X^2$
N433	2M70B			$X^2 \rightarrow X^1$
N436	2N62B			Comp. $X^1 \rightarrow X^2$
N532	2P68B			$X^1 \rightarrow X^2$
N533	2O68B			$X^2 \rightarrow X^1$
N536	2O64B			Comp. $X^1 \rightarrow X^2$
W504	7P51B			$M^0 \rightarrow X^2$
W505	7P52B			
W926	2P49B			$Q^2 \rightarrow X^1$
W927	2P63B			

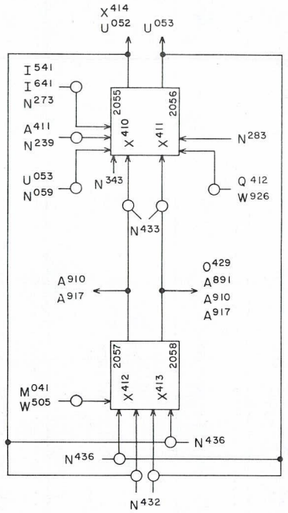

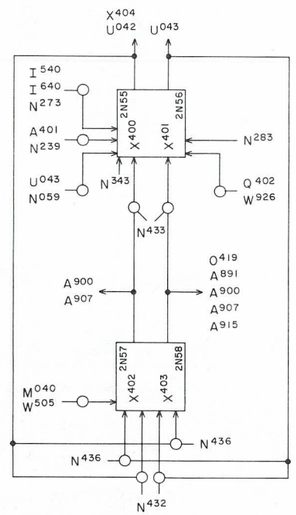

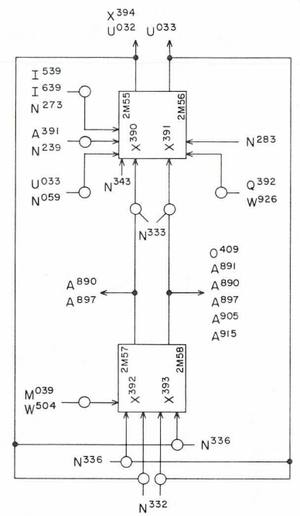

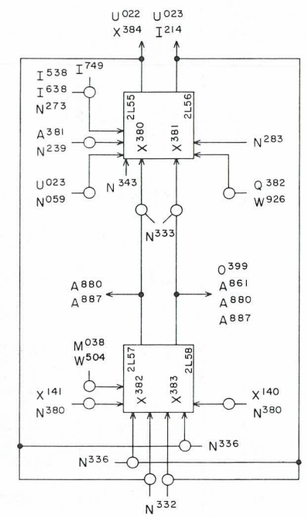

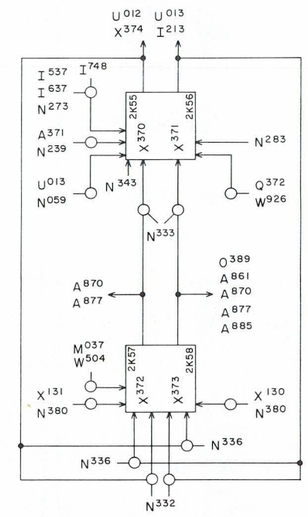

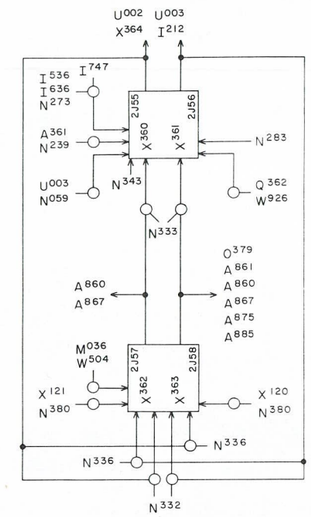

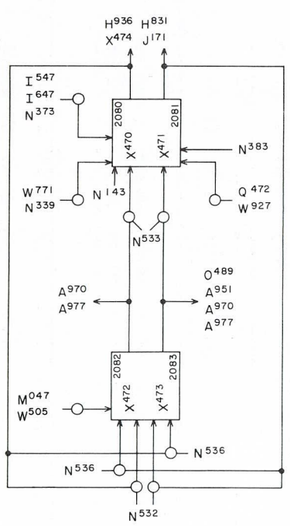

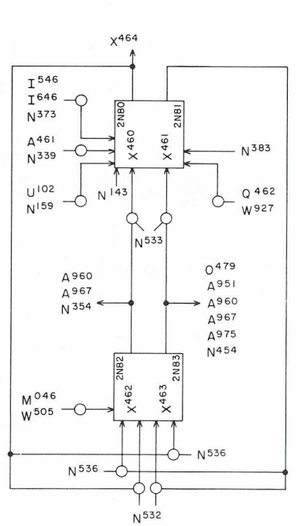

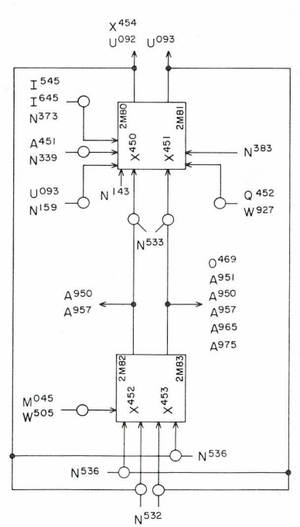

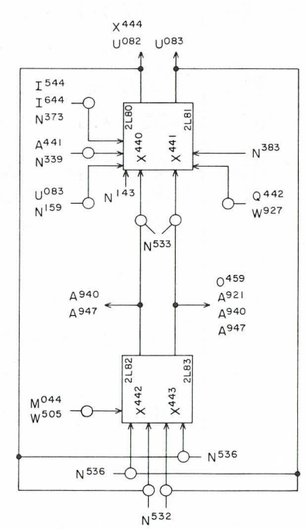

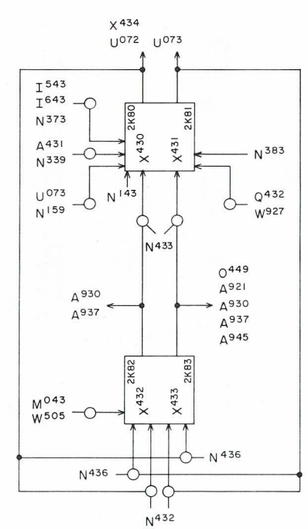

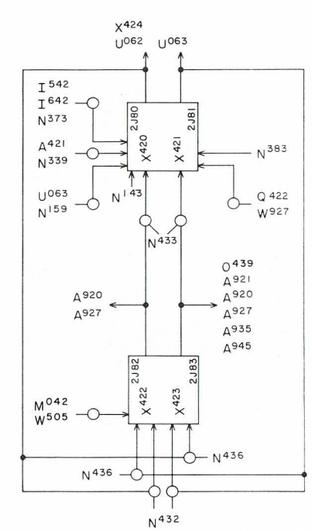

REV.	AUTH.	DATE	REV.	CHK.	APPROVED

REVISIONS

APPROVED -
CHECKED -
DRAWN - R.M. / E.S. 9-7-62
DESIGNED -

REFERENCE DRAWINGS

COMPONENTS (UNLESS OTHERWISE INDICATED)

	TOLERANCE	VALUE	SIZE
RESISTORS			
CAPACITORS			

TITLE

X REGISTER BITS 36 THRU 47

CONTROL DATA CORPORATION

PROJECT OR PRODUCT 1604-A

DRAWING NUMBER XDP 214604 REV A

PAGE 49.4

TERM	LOCATION	PAGE	QUAD.	DEFINITION
F462	4K74A	19.3	3	$\overline{62}$
F476	3M31C	19.3	3	$\overline{76}$
F523	4M11C	19.4	2	43 - 46
F527	3N84A	19.4	0	04 + 10 + 11
F541	3N80B	19.4	2	30 - 33
F543	4N01	19.4	2	43
F548	4N03A	19.4	1	66 + 67
F553	3O83B	19.4	1	56 + 57
F566	4N07A	19.4	3	40 + 41
F569	3O78A	19.4	1	20 + 21 + 47 + 60 + 61
F575	4N07C	19.4	1	62
F576	4O04A	19.4	1	43 + 72 + 73 + Adv. Clock
F593	3K55A	19.4	3	47
F597	4O05A	19.4	3	37 + 70 - 73 + Adv. Clock
F641	3P27B	19.5	0	30 - 33
F737	3P26B	19.6	2	32 + 33
F740	3P25B	19.6	2	30 + 31
F840	3P22B	19.6	1	30 + 31
K203	4K30	8.0	1	RO Wait Storage 1
K205	4K31B	8.1	3	RO Wait Storage 2
K208	3O31A	11	0	Iterative Wait Storage
K211	4M41C	10.0	3	S & T Wait Storage
K216	4P42C	16	0	f = 74.1 - 6
K218	4O80A	5	1	Indirect Wait Storage
K252	4N17A	17.0	2	Aux. Seq. Wait Storage
N380	2J69B			$X^1_L \rightarrow X^2_U$
U142	5L60B	18.3	2	U^2 Pos.
V000	4J02	5	3	Execute Instruction
V005	4K02C	28	1	Manual Control
V073	3H08	54.0, .1	1	Storage Resume
V099	4K11	5	1	RNI Seq.
V205	3K61	7	0	ZA Seq.

TERM	LOCATION	PAGE	QUAD.	DEFINITION
V307	4K24C	8.0	0	
V309	4K26	8.0	1	
V311	4K27C	8.0	1	
V340	4K41	8.0	1	
V341	4K42	8.1	0	RO Seq.
V343	4K45A	8.1	0	
V345	4K47	8.1	0	
V349	4K50A	8.1	1	
V405	3M59A	9	2	
V407	3M60	9	2	WO Seq.
V409	3M62	9	3	
V521	4M29	10.1	3	
V527	4M34C	10.1	0	
V529	4M35C	10.1	0	S & T Seq.
V541	4M46	10.1	3	
V544	4M48C	10.2	0	
V605	3O22	11	0	
V609	3O25	11	1	Iterative Seq. (Main)
V611	3O27	11	1	
V651	3O41	15	0	Iterative Seq. (End Sign Correction)
V663	3O53C	13	0	
V665	3O55	13	0	
V667	3O57	13	1	Iterative Seq. (Ex. Floating Point)
V669	3O59A	13	1	
V677	3O72	14	0	
V686	3P42	14	1	
V691	3P53C	14	2	Iterative Seq. (Round, Norm., Final Ass'y.)
V696	3P62C	14	2	
V701	4O10	16	0	EXF Seq.
V789	4M79A	33	0	Interrupt Seq.
W144	4K78B	25	1	Internal M. C.

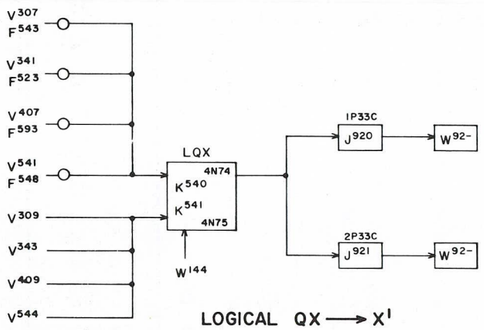

LOGICAL QX ⟶ X¹

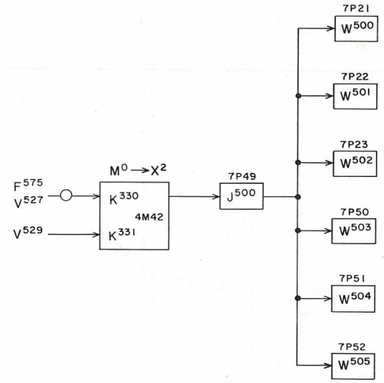

M⁰ ⟶ X²

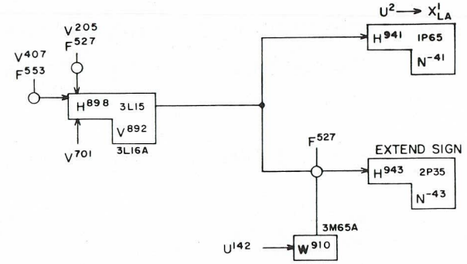

U² ⟶ X¹LA
WITH EXTENSION

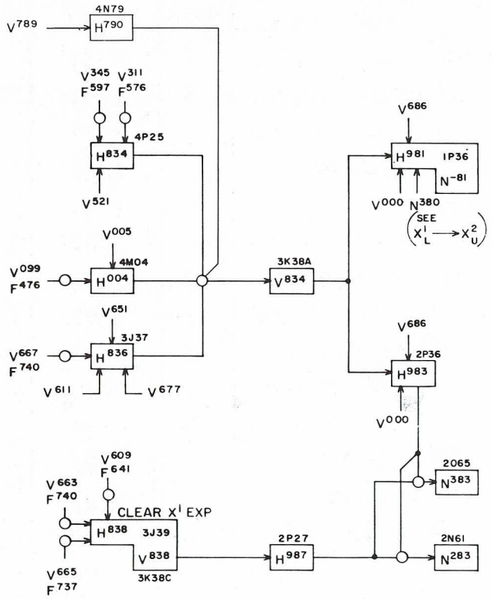

CLEAR X¹

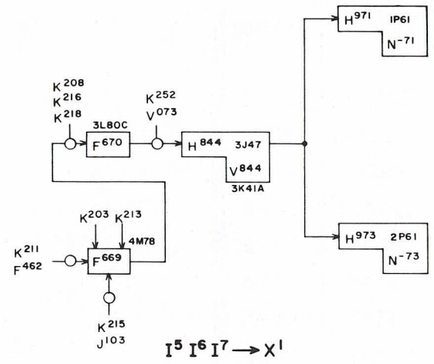

I⁵ I⁶ I⁷ ⟶ X¹

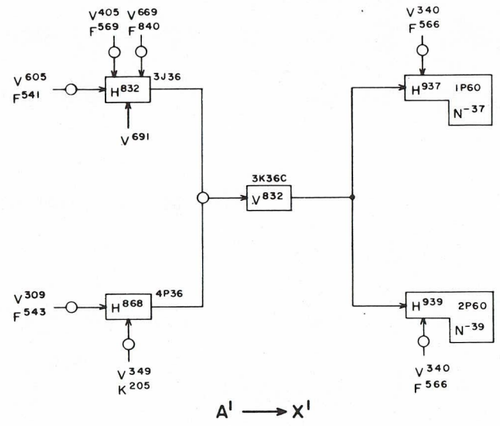

A¹ ⟶ X¹

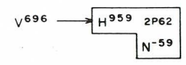

U² EXP ⟶ X¹

REV.	AUTH.	DATE	REVISIONS	APPROVED	CHKD.	DRWN.	DESIGNED
			-	-	4-25-60	4-25-60	2-18-60
					D.W.S.	R.R.M.	S.E.A.

REFERENCE DRAWINGS

CONTROL DATA CORPORATION

PROJECT OR PRODUCT: 1604-A

DRAWING NUMBER: XDP 214553 REV. C

TITLE: X REGISTER CONTROL

SHEET: 1 OF 2 PAGE: 50.0

TERM	LOCATION	PAGE	QUAD.	DEFINITION
F430	3M24C	19.3	2	$\overline{30}$
F432	3M25C	19.3	0	$\overline{32}$
F440	3M09A	19.3	0	30 + 31
F514	3M81A	19.4	0	25 + 27
F529	4M12C	8.0	0	72 + Adv. Clock
F530	4M13A	19.4	0	12 + 14 + 16 + 37 + 40 + 42 + 70 - 73 + Adv. Clock
F531	4M13C	19.4	0	43 - 45
F533	4M14B	19.4	0	63
F534	4N16A	19.4	0	74
F535	4M15A	19.4	2	74.0 + 74.7
F536	8N84C	19.4	2	(30 + 31) (SR ≠ 1) + 32 + 33
F537	3N83B	19.4	2	32 + 33
F540	3N81B	19.4	2	30 + 31
F541	3N80B	19.4	2	30 - 33
F542	4M16A	19.4	2	41 + 43 + 71 + 73
F543	4N01B	19.4	2	43
F544	4M16C	19.4	2	13 + 15 + 17 + 41
F545	4N02A	19.4	1	46
F546	3M78C	19.4	1	24 + 26 + 30 + 31
F547	4N02C	19.4	1	64 + 65
F548	4N03A	19.4	1	66 + 67
F557	3O81B	19.4	3	22 + 23 + 75 + 76
F563	4N06C	19.4	3	72 + 73 + Adv. Clock
F575	4N07C	19.4	1	62
F616	3K29C	19.5	0	32
F628	4K70A	19.5	0	53
F640	3P28B	19.5	2	30 + 31
F717	4N39B	19.6	2	b = 1 - 6
F740	3P25B	19.6	2	30 + 31
K500	3K10B	11	2	AQ Sign Record FF
K510	3K13A	14	2	U^2 Sign Record FF
K512	3K13C	14	2	X^1 Sign Record FF
K513	3K15B	14	2	X^1 Sign Record FF
N241	1P50B			$U^2 \rightarrow X^1$
N368	1J69B			$P^1 \rightarrow X^2$

TERM	LOCATION	PAGE	QUAD.	DEFINITION
V206	3K62	7	2	ZA Seq.
V303	4K25C	8.0	0	RO Seq.
V304	4K22	8.0	0	
V305	4K23	8.0	0	
V307	4K24C	8.0	0	
V310	4K27A	8.0	1	
V340	4K41	8.0	1	
V341	4K42	8.1	0	
V344	4K46	8.1	0	
V407	3M60	9	2	WO Seq.
V524	4M32A	10.1	0	S & T Seq.
V540	4M45	10.1	3	
V542	4M47A	10.1	3	
V561	4M30C	10.1	0	
V602	3O20C	11	0	Iterative Seq. (Main)
V610	3O26	11	1	
V620	3O33	11	2	
V622	3O36A	11	2	
V623	3O37	11	2	
V652	3O42	15	0	Iterative Seq.
V662	3O53A	13	0	Iterative Seq. (Ex. Floating Point)
V663	3O53C	13	0	
V664	3O54	13	0	
V665	3O55	13	0	
V666	3O56A	13	0	
V671	3O59C	13	2	
V674	3O63A	13	2	
V678	3O73A	14	0	Iterative Seq. (Round, Norm., Final Ass'y.)
V680	3O74	14	0	
V682	3P34C	14	0	
V692	3P55	14	2	
V693	3O04C	13	2	Iterative Seq. (Ex. Floating Point)
V696	3P62C	14	2	Iterative Seq. (Round, Norm., Final Ass'y.)
V702	4O11	16	0	EXF Seq.
V971	3K30B	9	1	(Storage Resume) (56 + 60 + Return Jump) (WO Wait Storage) (Aux. Wait Storage)
W144	4K78	25	1	Internal M. C.

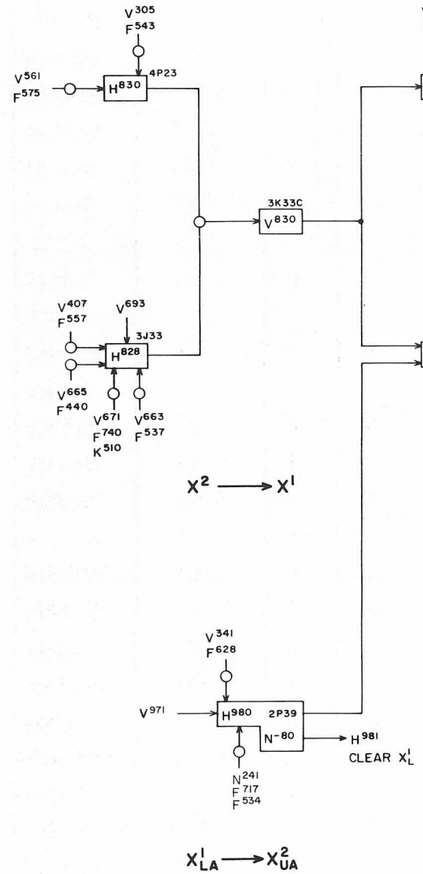

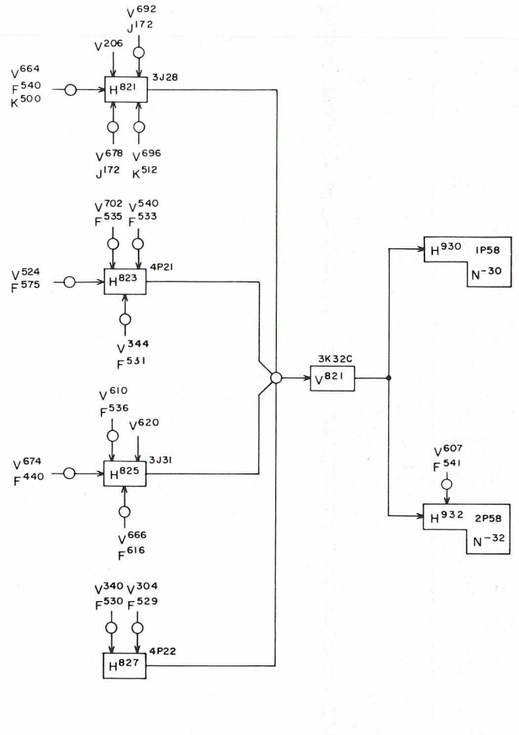

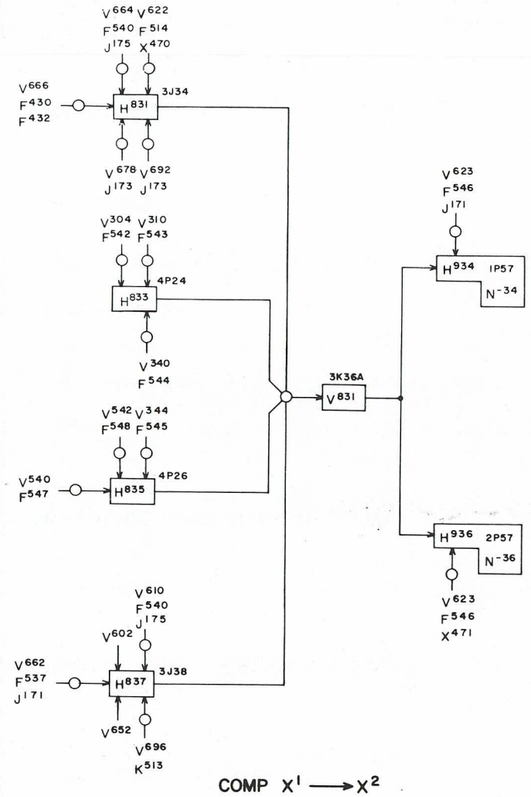

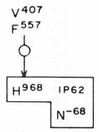

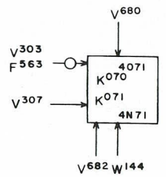

SET X^2 TO ONE

REV.	AUTH.	DATE	REVISIONS	DRW.	CHK.	APPROVED
-			APPROVED			
			CHECKED D.W.S.		4-25-60	
			DRAWN I.R.R.M.		4-25-60	
			DESIGNED S.E.A.		2-2-60	

REFERENCE DRAWINGS

CONTROL DATA CORPORATION

PROJECT OR PRODUCT: 1604-A

TITLE: X REGISTER CONTROL

DRAWING NUMBER: XDP 214554 REV. E

PAGE 50.1

TERM	LOCATION	PAGE	QUAD.	DEFINITION
F455	3M28A	19.3	1	$\overline{55}$
F477	3K24A	19.3	3	$\overline{36 + 37}$
F514	3M81A	19.4	0	25 + 27
F550	3N79B	19.4	1	54
F567	4O27A	19.4	3	37
F571	3O78C	19.4	1	01 - 07 + 34 + 35
F573	3O77B	19.4	1	55
F585	3J56A	19.4	3	01 + 03 + 30 + 31
F586	3J56C	19.4	3	02 + 03 + 30 + 31
F588	3J54A	19.4	3	34 + 35
F630	3K27C	19.5	0	27
F636	3K26A	19.5	0	05 + 07 + 34 + 35
F641	3P27B	19.5	2	30 - 33
F652	3M39A	19.5	1	06 + 07 + 35
F940	3P21B	19.6	3	30 + 31
J111	3N11C	52	1	$A^{36} \neq A^{37}$
J123	3N13A	52	1	$A^{35} = A^{36}$
J130	3M65C	52	0	A = 0
J131	3N03C	52	1	$A^{36} = A^{37}$
J134	3N08A	21	3	$R \leq 36_{10}$
K487	4P39	8.1	0	f = 37 FF
N911	1P24C			Odd Clock Slave
N923	2P24C			
N925	2P24A			
N931	3J76C			
N932	3L20A			
N933	3L20C			
N935	3O49C			
N991	3M09C			
V010	3L79	5, 25	2	Clear Control FF's
V011	3L78C	25	1	Internal M. C.
V050	3L78A	7	3	$R^2 \rightarrow$ B Exit

TERM	LOCATION	PAGE	QUAD.	DEFINITION
V202	3K59A	7	0	ZA Seq.
V206	3K62	7	0	
V210	3K65A	7	1	
V220	3K77C	7	1	
V221	3K76C	7	1	
V222	3K76A	7	1	
V223	3K69C	7	1	
V346	4K48	8.1	0	
V347	4K49B	8.1	0	RO Sequence
V348	4K51C	8.1	1	
V560	4M30A	10.0, .1	0	S & T Seq.
V590	3O02A	13	2	Iterative Seq. (Ex. Floating Point)
V594	3O06	13	3	
V622	3O36A	11	2	Iterative Seq. (Main)
V623	3O37	11	2	
V630	3M36	12	0	Iterative Seq. (Multiply Step)
V634	3M39	12	0	
V635	3M38C	12	0	
V637	3M40	12	0	
V644	3M51	12	3	Iterative Seq. (Divide Step)
V645	3M52A	12	3	
V646	3M53	12	3	
V647	3M54	12	3	
V660	3O52A	13	0	Iterative Seq. (Ex. Floating Point)
V672	3O61	13	2	
V675	3O63C	13	2	
V687	3P44A	14	1	Iterative Seq.
V688	3P47A	14	1	Iterative Seq. (Round, Norm., Final Ass'y.)
V689	3P47C	14	1	
V860	3K42A	21	1	$R^2 \rightarrow R^1$
W147	3J06C	25	2	Internal M. C.
W151	3J06A	25	2	

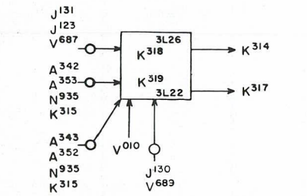

NORMALIZE SHIFT EXIT CONTROL

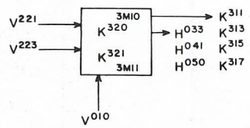

SHIFT EXIT CONTROL

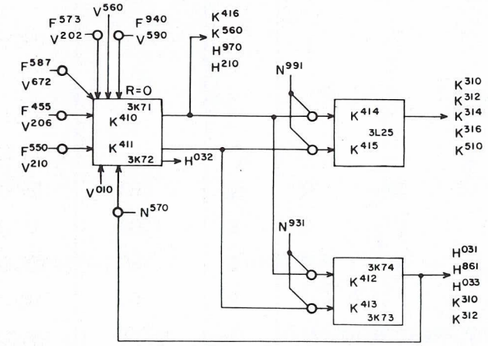

SHIFT INITIATE CONTROL

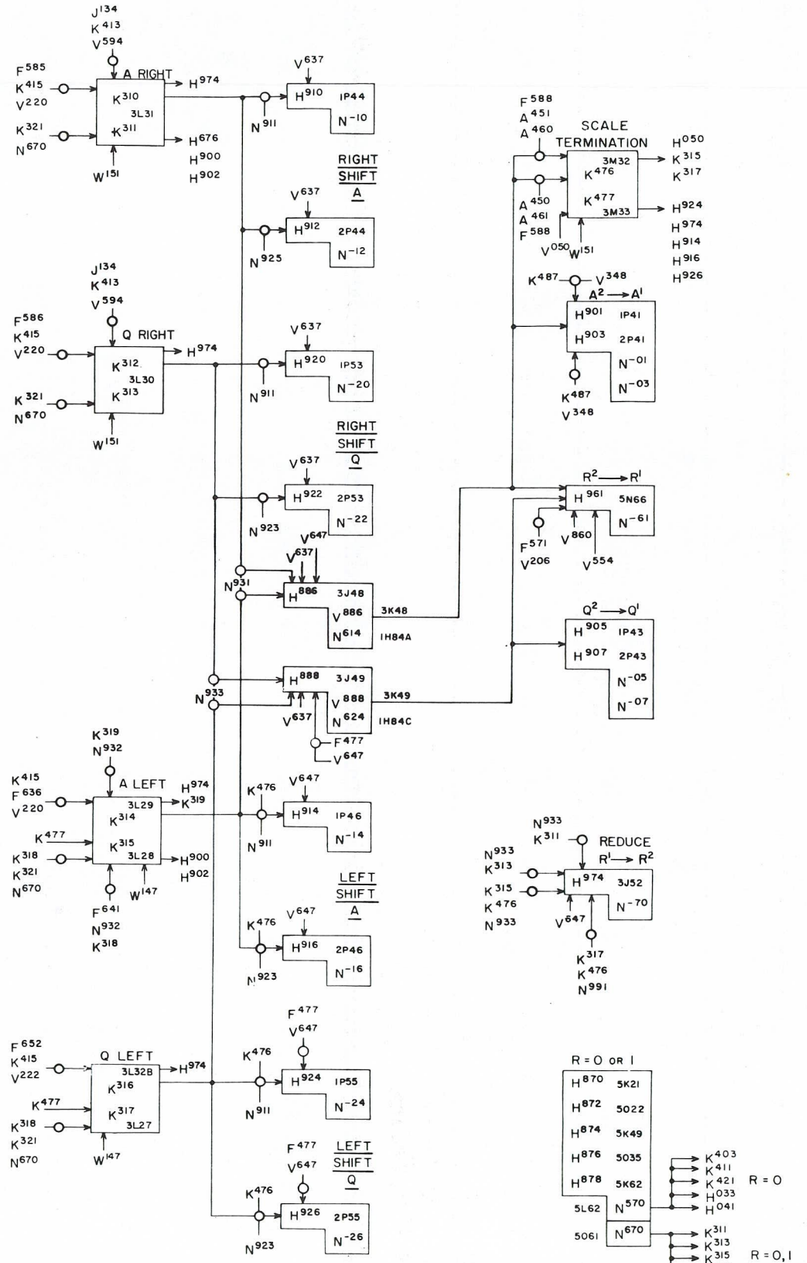

SHIFT INSTRUCTION CONTROL

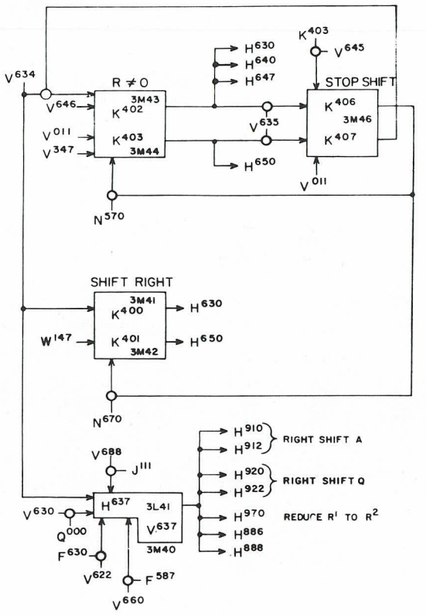

MULTIPLY SHIFT CONTROL

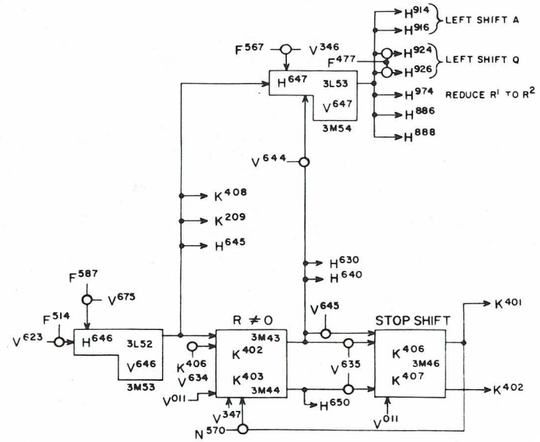

DIVIDE SHIFT CONTROL

REV.	AUTH.	DATE	REQ.	ORIG.	CHK.	APPROVED
REVISIONS						

APPROVED :
CHECKED : DMCS
DRAWN : E.A. BUTENHOFF 2-2-60
DESIGNED : S. ASCHENBRENNER 12-2-59

REFERENCE DRAWINGS

COMPONENTS (UNLESS OTHERWISE INDICATED)

	TOLERANCE	VALUE	SIZE
RESISTORS			
CAPACITORS			

TITLE

SHIFT CONTROL

CONTROL DATA CORPORATION

PROJECT OR PRODUCT

1604-A

DRAWING NUMBER

XDP 214583

REV

SHEET 51

TERM	LOCATION	PAGE	QUAD.	DEFINITION
A504	1L20	48.0	1	End Around
A512	1L44	48.0	3	Sec. 1 Borrow Enable - Accumulator Borrow Pyramid
A632	1L45	48.1	3	Sec. 2 Borrow Enable - Accumulator Borrow Pyramid
A752	2L44	48.2	3	Sec. 3 Borrow Enable - Accumulator Borrow Pyramid
A872	2L45	48.3	3	Sec. 4 Borrow Enable - Accumulator Borrow Pyramid
F433	3M26A	19.3	0	$\overline{33}$
F476	3M31C	19.3	3	$\overline{76}$
F516	6H13B	19.4	2	f = 23
F528	6H09A	19.4	0	f = 22
F661	4K63A	19.5	1	X5 + X7
F662	4K63C	19.5	1	X4 + X4 + X6
F910	6H05A	19.6	1	No Selective Jump
F912	6H06A	19	3	b = 0 + 4
F913	6H06C	19	3	b = 1 + 5
F914	6H07A	19	3	b = 2 + 6
F915	6H07C	19	1	b = 3 + 7

TERM	LOCATION	PAGE	QUAD.	DEFINITION

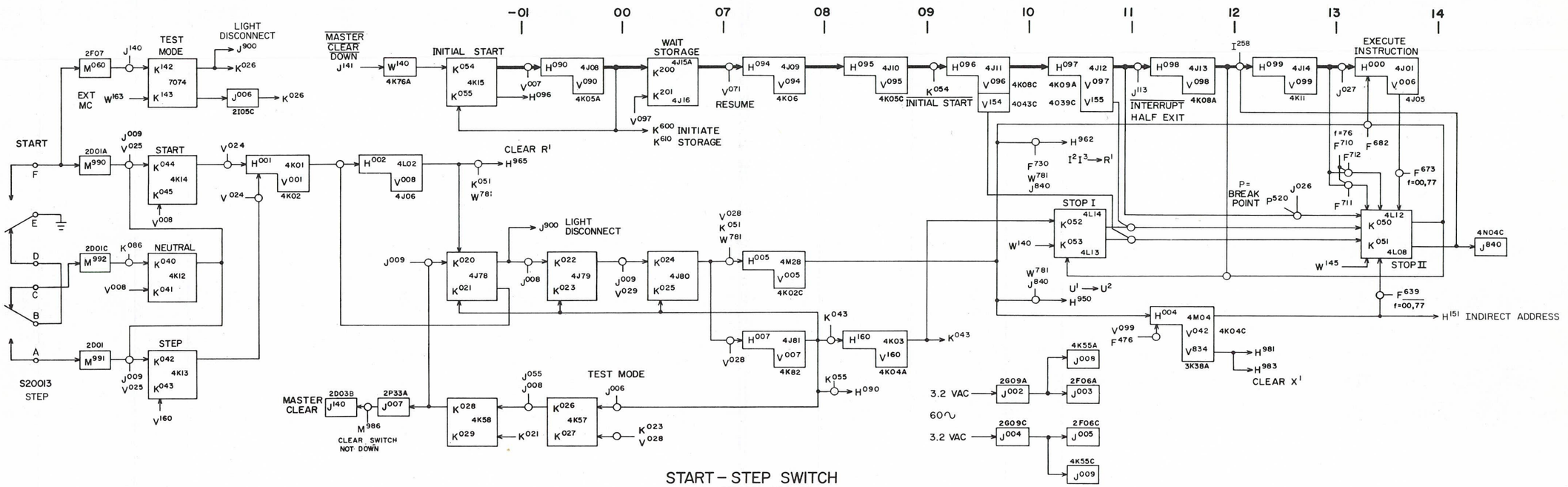

START – STEP SWITCH
AND AFFECTED CIRCUITS

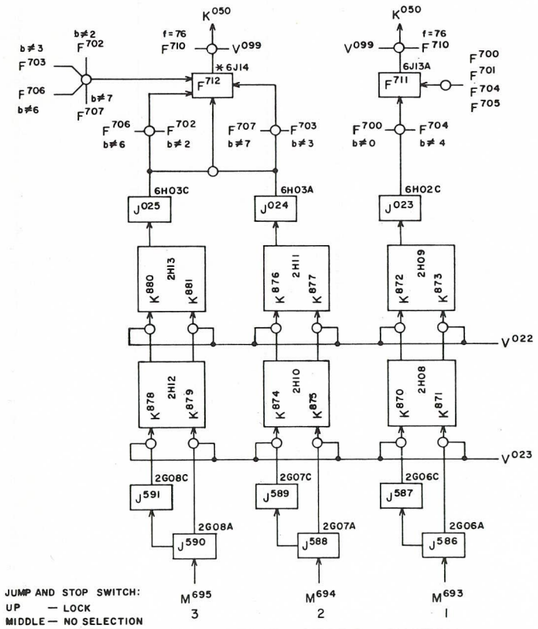

SELECTIVE STOPS SWITCH

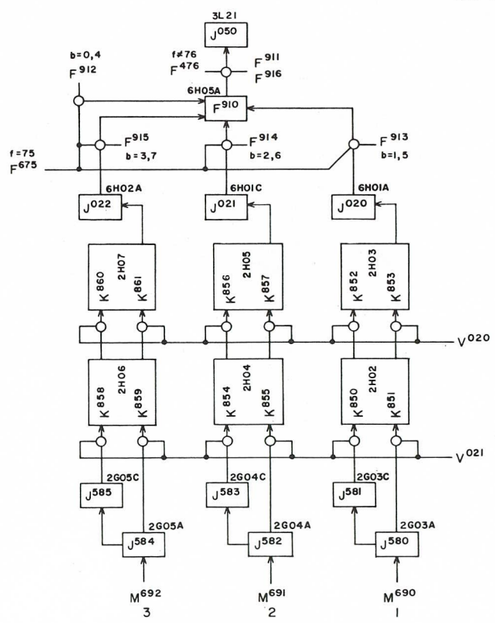

SELECTIVE JUMPS SWITCH

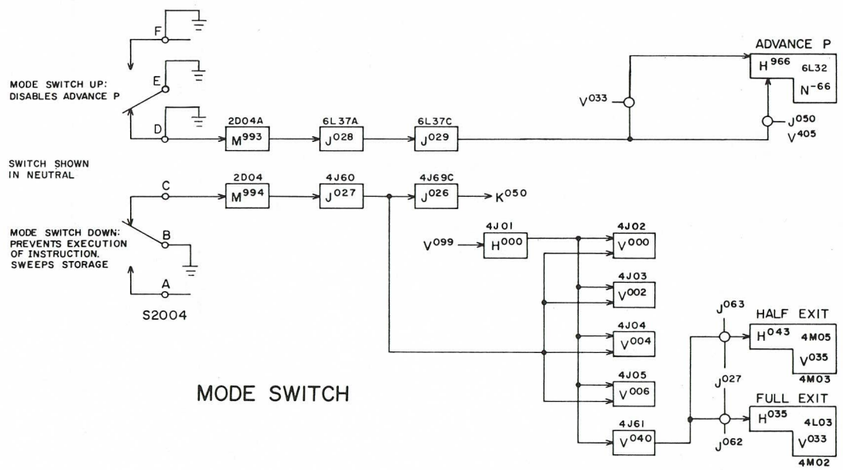

MODE SWITCH

REV.	REVISIONS	APPROVED	DATE
		APPROVED	3-1-60
		CHECKED — D.W.S.	3-1-60
		DRAWN — R.R.M.	
		DESIGNED — S.E.A.	1-5-60

REFERENCE DRAWINGS

COMPONENTS (UNLESS OTHERWISE INDICATED)

	TOLERANCE	VALUE	SIZE
RESISTORS			
CAPACITORS			

TITLE

MANUAL CONTROL

CONTROL DATA CORPORATION

PROJECT OR PRODUCT
1604-A

DRAWING NUMBER
XDP 214521

SHEET J

PAGE 28

TERM	LOCATION	PAGE	QUAD.	DEFINITION
N920	2F08A			Even Clock Slave
N921	2F08C			Odd Clock Slave

TERM	LOCATION	PAGE	QUAD.	DEFINITION

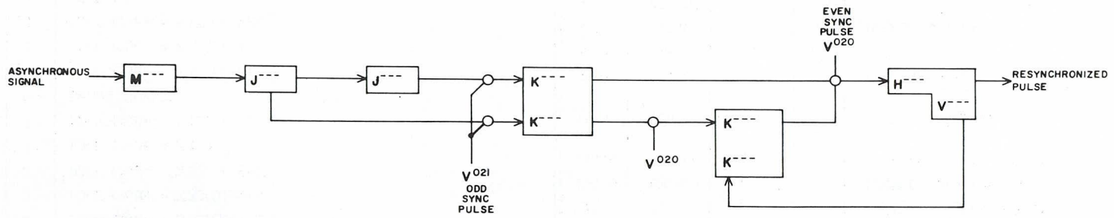

TYPICAL RESYNCHRONIZING CIRCUIT

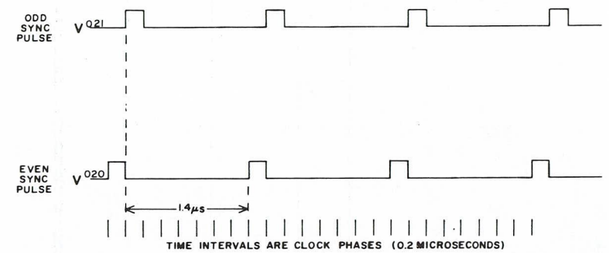

SYNC PULSE TIMING CHART

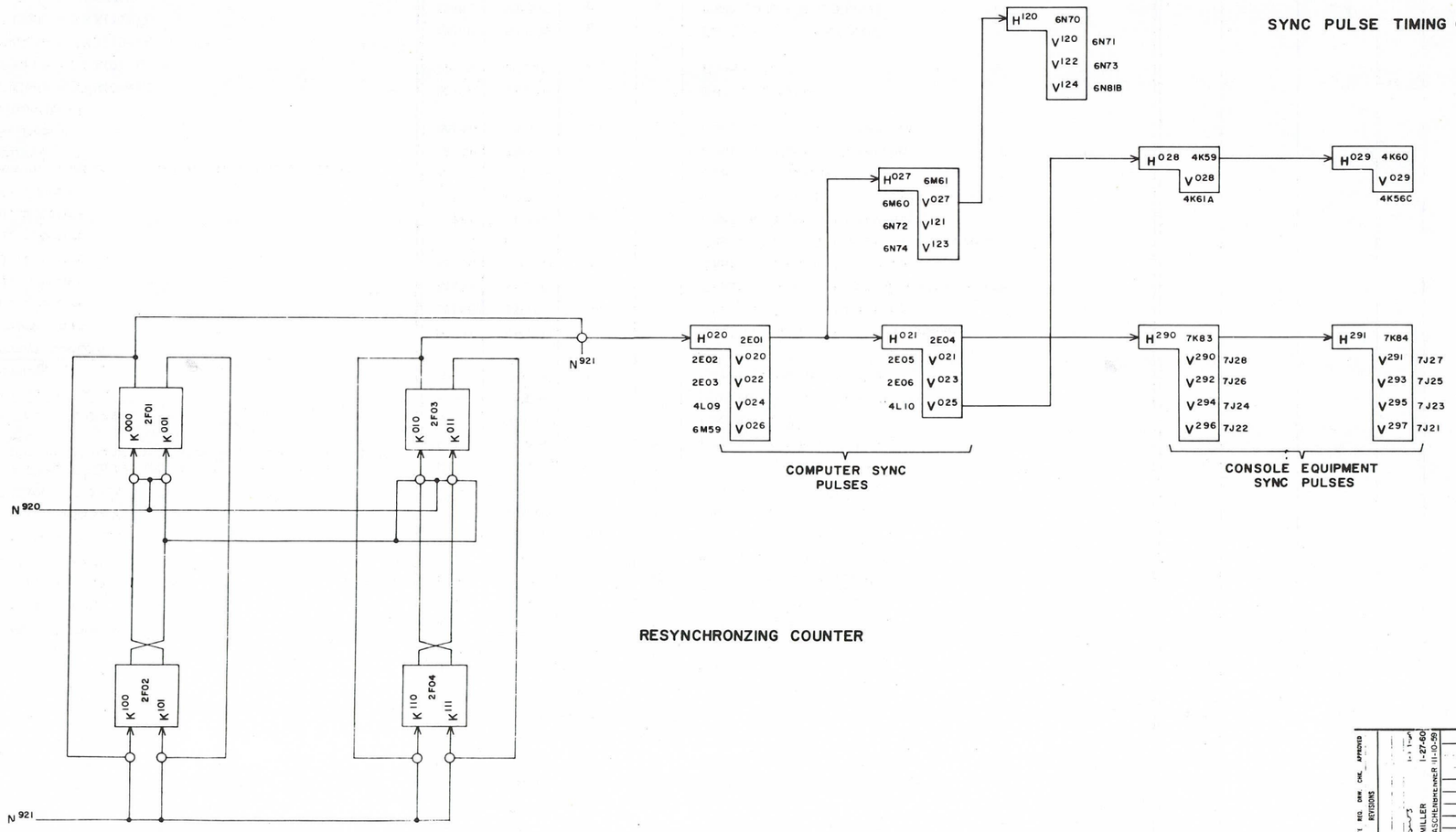

RESYNCHRONZING COUNTER

REV. AUTH. DATE REQ. DRW. CHK. APPROVED
REVISIONS

APPROVED
CHECKED
DRAWN R. MILLER 1-27-60
DESIGNED S. ASCHENBRENNER 11-10-59

REFERENCE DRAWINGS

CONTROL DATA CORPORATION

PROJECT OR PRODUCT 1604-A

DRAWING NUMBER XDP 214578 REV.

TITLE LOGIC DIAGRAM
RESYNCHRONZING COUNTER

PAGE 29

TERM	LOCATION	PAGE	QUAD.	DEFINITION
I186	6N43C	31	2	Sense 0XX00,1
I286	6J05C	33	1	Interrupt Lockout
I293	6E77A	33	1	Interrupt Lockout
I367	6M76C	31	3	Select 0XX00,1
I375	6K40	31	3	EXF Code = XX0XX
I376	6K45	31	3	EXF Code = XX1XX
I378	6L47	31	3	EXF Code = XX3XX
I383	6M33	31	2	Sense 0XX00,1
I384	6M69	31	3	EXF Code = XX0XX
I385	6M82	31	3	EXF Code = X1XXX
I386	6N26	31	3	EXF Code = X2XXX
I387	6N44	31	3	EXF Code = X3XXX
I388	6N53	31	3	EXF Code = X4XXX
I389	6N57	31	3	EXF Code = X5XXX
I390	6N69	31	3	EXF Code = X6XXX
I394	6J33C	31	1	(Sense Chnl. 7^{I} Interrupt) (Condition Met) + (Sense Chn. 7^{0} Interrupt) (Condition Met) + (Sense Interrupt Exit FF (FF Set)
I397	6O63C	31	1	EXF Code = X0XXX
I398	6O39A	31	3	EXF Code = XX2XX
J068	6H83	33	2	Interrupt
J070	6J47	33	1	Interrupt Lockout
J177	6J84C			Overflow Fault
J191	6N52A	60	0	Chnl. 1 Active
J192	6N52C	60	0	Chnl. 2 Active
J193	6N56A	60	2	Chnl. 3 Active
J194	6N56C	60	2	Chnl. 4 Active
J195	6N60A	60	1	Chnl. 5 Active
J196	6N60C	60	1	Chnl. 6 Active
J197	6O64C	53	0	(Allow Internal Interrupt) (Overflow Fault + Clock Overflow)
J450	8N02	62,16	2	Sense Ready
J451	8N01	62,16	2	Function Ready
J504	6M70B	66	3	EXF Code = XXX(00x)X
J505	6M71B	66	3	EXF Code = XXX(01x)X
J506	6M72B	66	3	EXF Code = XXX(10x)X
J507	6M73B	66	3	EXF Code = XXX(11x)X
J526	6K01C	31	1	EXF Code = X1XXX
J937	7N64C	66	2	Chnl. 1 Sense Ready
J941	7N66C	66	2	Chnl. 2 Sense Ready
J942	7N79A	66	3	EXF Code = XXX(xx0)X
J943	7N79C	66	3	EXF Code = XXX(xx1)X
J946	7N71B	66	3	EXF Code = XXX(0xx)X
J947	7N77B	66	3	EXF Code = XXX(1xx)X
J960	7O60	66	3	EXF Code = X11XX
J963	7O61	66	3	EXF Code = X12XX
J965	7O64C	66	0	Sense 112XX
J974	6M74B	66	3	EXF Code = XXX(xx0)X
J975	6M75B	66	3	EXF Code = XXX(xx1)X
J976	6M76A	66	3	EXF Code = XXX(xx0)X
J977	6M77B	66	3	EXF Code = XXX(xx1)X

TERM	LOCATION	PAGE	QUAD.	DEFINITION
K136	4P54C	16	2	Sense Resync. FF
K144	6M56	60	3	Real Time Clock Selected FF
K339	6G02C	8.1	1	Clock Overflow
K700	6N50A	45, 17.1	0,2	Chnl. 1
K702	6N51A	45, 17.1	0,2	Chnl. 2
K704	6N54A	45, 17.1	0,2	Chnl. 3
K706	6N55A	45,17.1	0,2	Chnl. 4
K708	6N58A	45, 17.1	0.2	Chnl. 5
K710	6N59A	45, 17.1	0,2	Chnl. 6
				} Buffer Active
K723	6O51C	60	0	Wait Ready FF (Chnl. 1)
K726	6O52A	60	0	Wait Resume FF (Chnl. 2)
K731	6O55C	60	2	Wait Ready FF (Chnl. 3)
K734	6O56A	60	2	Wait Resume FF (Chnl. 4)
K739	6O59C	60	1	Wait Ready FF (Chnl. 5)
K742	6O6A	60	1	Wait Resume FF (Chnl. 6)
K905	7L61C	66	1	End of Tape FF (reader)
K907	7L59C	66	0	Interrupt on End of Tape
K930	7J09A	71	1	Character Mode
K989	7O69C	67	2	Interrupt on Carriage Return or Tab
K997	7O70C	67	2	Carriage Return or Tab
M051	8P14C			Chnl. 7, External Sense Response
M150	8P19B	32	2	Chnl. 2, External Interrupt
M151	8P19C			Chnls. 1 & 2, External Sense Response
M250	8P22B	32	2	Chnl. 4, External Interrupt
M251	8P22C			Chnls. 3 & 4, External Sense Response
M350	8P25B	32	2	Chnl. 6, External Interrupt
M351	8P25C			Chnls. 5 & 6, External Sense Response
M450	7M70A	32	2	Chnl. 1, External Interrupt
M550	7M70B	32	2	Chnl. 3, External Interrupt
M650	7M70C	32	2	Chnl. 5, External Interrupt
N909	6L38B			Odd Clock Slave
N928	6O33C			Even Clock
O000	8J09A	62	3	EXF Code = XXXX(xx0)
O001	8J09C	62	3	EXF Code = XXXX(xx1)
O030	8M09A	62	3	EXF Code = XXX(xx0)X
O120	8J29A	62	2	EXF Code = (xx0)XXXX
O130	8K29A	62	2	EXF Code = (x0x)XXXX
O140	8L29A	62	2	EXF Code = (0xx)XXXX
O620	8J31A	62	2	EXF Code = (xx0)XXXX
O630	8K34A	62	2	EXF Code = (x0x)XXXX
O640	8L31A	62	2	EXF Code = (0xx)XXXX
U707	5O63	53	3	U^{11} - U^{14} Unequal
V006	4J05	5	3	RNI Sequence
V404	3M58	9	0	
V407	3M60	9	0	WO Sequence
V415	6L66C	9	2	
V598	6J69	14	3	Iterative Seq. (Round, Norm., Final Ass'y.)

TERM	LOCATION	PAGE	QUAD.	DEFINITION
W152		25	3	Internal M.C.
W159		25	1	
W164		25	0	External M.C.
W167		25	1	
W184		25	2	Internal M.C.

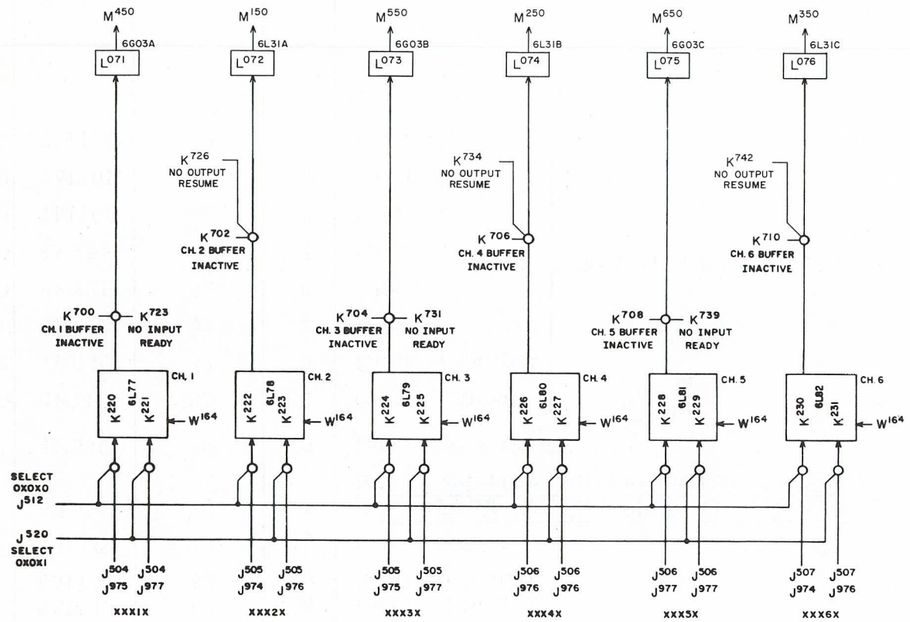

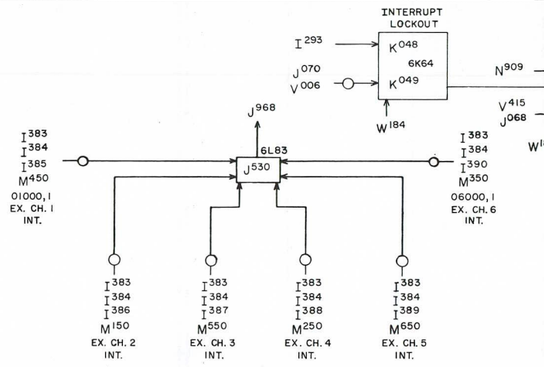

ACTIVE INTERRUPTS

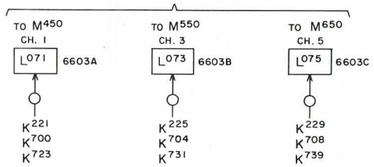

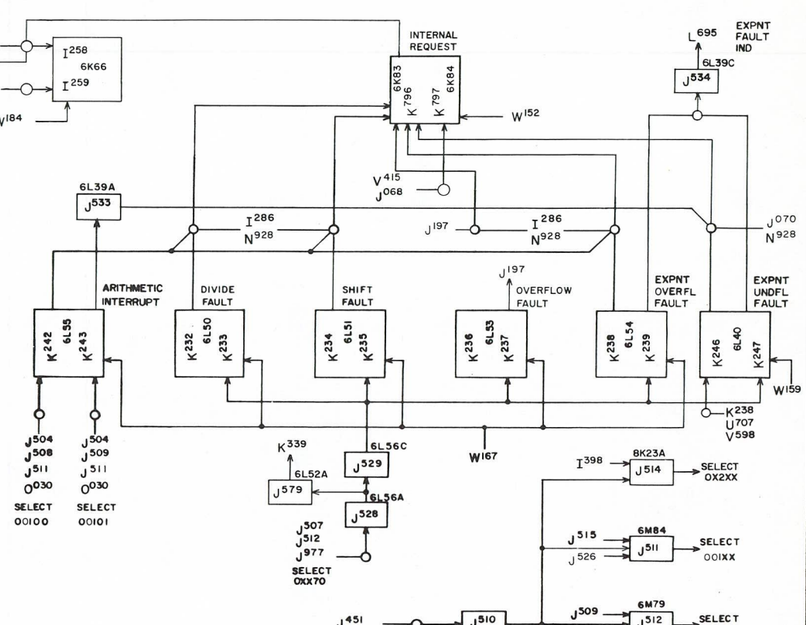

INTERRUPT CIRCUITS

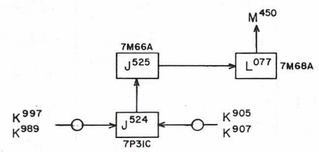

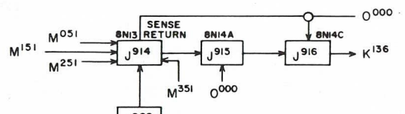

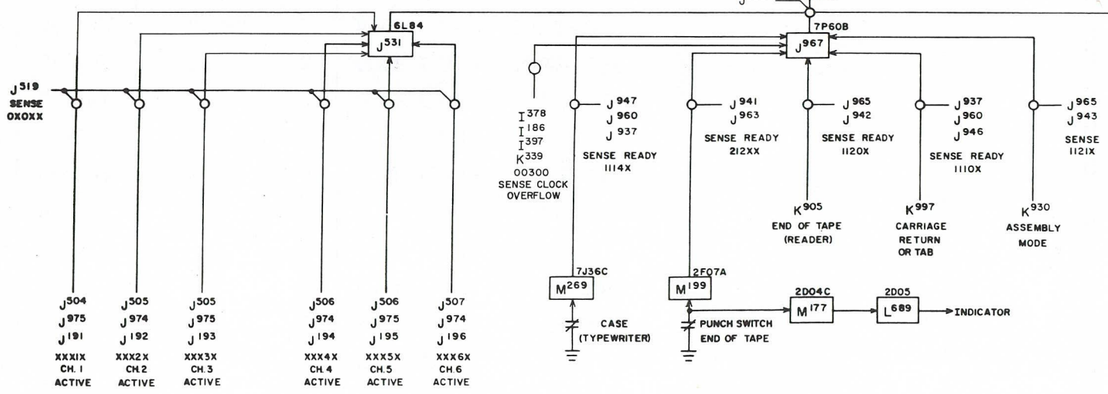

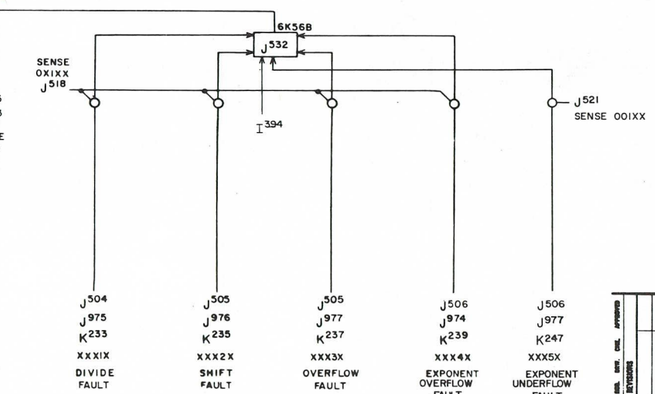

SENSE CIRCUIT

REVISIONS	APPROVED	CHECKED	DRAWN	DESIGNED
-	-	D.W.S. 3-11-60	R.R.M. 3-11-60	S.E.A. 1-20-60

REFERENCE DRAWINGS

CONTROL DATA CORPORATION

PROJECT OR PRODUCT 1604-A

DRAWING NUMBER XDP 214532 REV. F

TITLE SENSE & INTERRUPT CKTS.

PAGE 30

TERM	LOCATION	PAGE	QUAD.	DEFINITION
I048	8P72A	62	2	EXF Code = X(x1x)XXX
I050	8O72A	62	3	EXF Code = XXXX(xx1)
I051	8O72C	62	3	EXF Code = XXXX(xlx)
I052	8O73A	62	3	EXF Code = XXXX(lxx)
I053	8O73C	62	3	EXF Code = XXX(001)X
I054	8O74A	62	3	EXF Code = XXX(xlx)X
I055	8O74C	62	3	EXF Code = XXX(lxx)X
I056	8O80A	62	3	EXF Code = XX(xxl)XX
I057	8O80C	62	3	EXF Code = XX(xlx)XX
I058	8O81A	62	3	EXF Code = XX(lxx)XX
I059	8O81C	62	3	EXF Code = X(xxl)XXX
I060	8O82A	62	2	EXF Code = X(xlx)XXX
I061	8O82C	62	2	EXF Code = X(lxx)XXX
I270	6K75A	32	3	Interrupt Address Register
I271	6K75C	32	3	
I272	6K76A	32	3	
I273	6K65C	32	3	
I274	6K77A	32	3	
I275	6K77C	32	3	
I364	6K72A	32	3	Master Interrupt Mask
J510	6M78A	62	0	Internal Select
J517	6M78C	62	0	Internal Sense
J521	6J61C	30	3	Sense 001XX
J532	6K56B	30	3	Sense Fault (Divide, Shift, Overflow, Exp. Overflow, Exp. Underflow, Interrupt Exit FF Set.)
K069	4P54C	9	2	Interrupt Exit FF
M050	8P14B	32	3	External Interrupt Request: Chnl. 7 Input
M070	7K04C	32	3	Chnl. 7 Output
M150	8P19B	32	2	Chnl. 2
M250	8P22B	32	2	Chnl. 4
M350	8P25B	32	2	Chnl. 6
M450	7M70A	32	2	Chnl. 1
M550	7M70B	32	2	Chnl. 3
M650	7M70C	32	2	Chnl. 5

TERM	LOCATION	PAGE	QUAD.	DEFINITION
O000	8J09A	62	3	EXF Code = XXXX(xx0)
O030	8M09A	62	3	EXF Code = XXX(xx0)X
O060	8J20A	62	3	EXF Code = XX(xx0)XX
O070	8K20A	62	3	EXF Code = XX(x0x)XX
O080	8L20A	62	3	EXF Code = XX(0xx)XX
O090	8M20A	62	3	EXF Code = X(xx0)XXX
O100	8N20A	62	3	EXF Code = X(x0x)XXX
O110	8O20A	62	2	EXF Code = X(0xx)XXX
W160	7J39A	25	0	External M.C.
W166	6L75A	25	0	

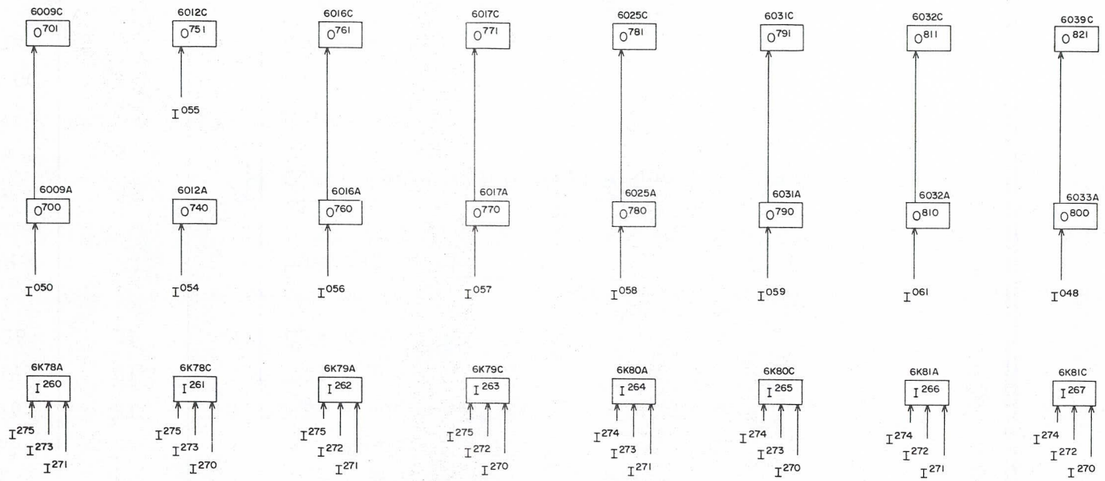

INTERRUPT ADDRESS TRANSLATORS

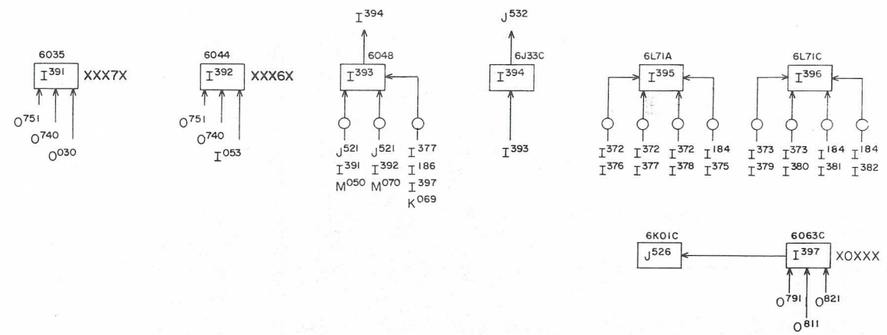

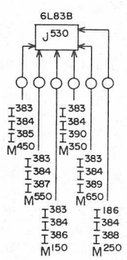

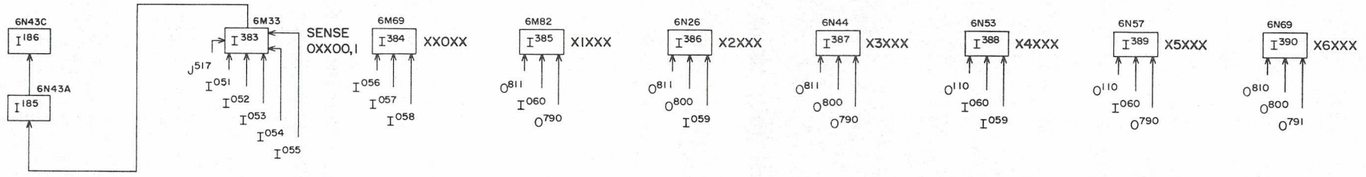

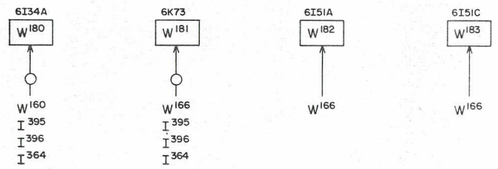

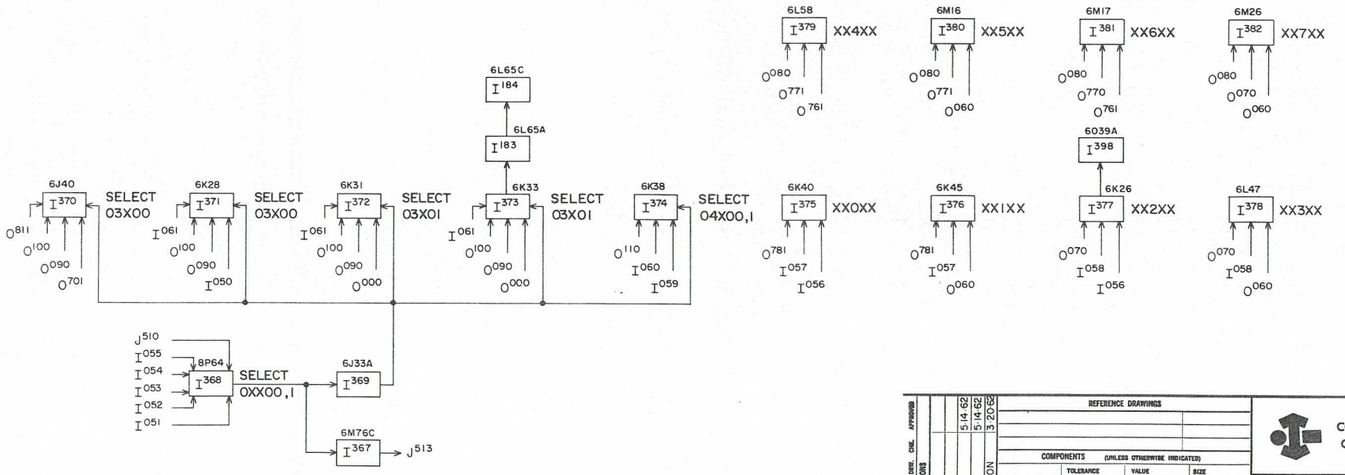

REV.	AUTH.	DATE	REVISIONS	REQ.	CHK.	APPROVED
-					5.14.62	5.14.62

APPROVED -
CHECKED - D.H.
DRAWN - HAN
DESIGNED - J.N. BENSON

REFERENCE DRAWINGS

COMPONENTS (UNLESS OTHERWISE INDICATED)

	TOLERANCE	VALUE	SIZE
RESISTORS			
CAPACITORS			

TITLE
INTERRUPT SELECT & SENSE TRANSLATORS

CONTROL DATA CORPORATION

PROJECT OR PRODUCT
1604-A

DRAWING NUMBER
XDP 214512 E

PAGE
31

TERM	LOCATION	PAGE	QUAD.	DEFINITION
I050	8O72A	62	3	EXF Code = XXXX(xx1)
I253	6J02	33	2	Internal Interrupt
I260	6K78A	31	0	IAR = 0
I261	6K78C	31	0	IAR = 1
I262	6K79A	31	0	IAR = 2
I263	6K79C	31	0	IAR = 3
I264	6K80A	31	0	IAR = 4
I265	6K80C	31	0	IAR = 5
I266	6K81A	31	0	IAR = 6
I267	6K81C	31	1	IAR = 7
I291	6E76A	33	1	$\overline{\text{Interrupt Lockout}}$
I292	6E76C	33	1	$\overline{\text{Interrupt Lockout}}$
I370	6J40	31	3	Select 03X00
I371	6K28	31	3	Select 03X00
I372	6K31	31	3	Select 03X01
I373	6K33	31	3	Select 03X01
I374	6K38	31	3	Select 04X00,1
I375	6K40	31	3	EXF Code = XX0XX
I376	6K45	31	3	EXF Code = XX1XX
I377	6K26	31	3	EXF Code = XX2XX
I378	6L47	31	3	EXF Code = XX3XX
I379	6L68	31	3	EXF Code = XX4XX
I380	6M16	31	3	EXF Code = XX5XX
I381	6M17	31	3	EXF Code = XX6XX
I382	6M26	31	3	EXF Code = XX7XX
J070	6J47A	33	1	$\overline{\text{Interrupt Lockout}}$
N852	6I75	9	2	Clear External Interrupt Request
N854	6I74	9	2	Clear External Interrupt Request
N982	6F76A			Even Clock
N984	6F76C			Even Clock
N986	6N74			Even Clock
O700	6O09A	31	0	EXF Code = XXXX (xx0)
V404	3M58	9	0	WO Seq.

TERM	LOCATION	PAGE	QUAD.	DEFINITION
W180	6I34A	31	2	Disallow All External Interrupts + External M.C. + Disallow Any One External Interrupt
W181	6K73	31	2	
W182	6I51A	31	2	External M.C.
W183	6I51A	31	2	External M.C.

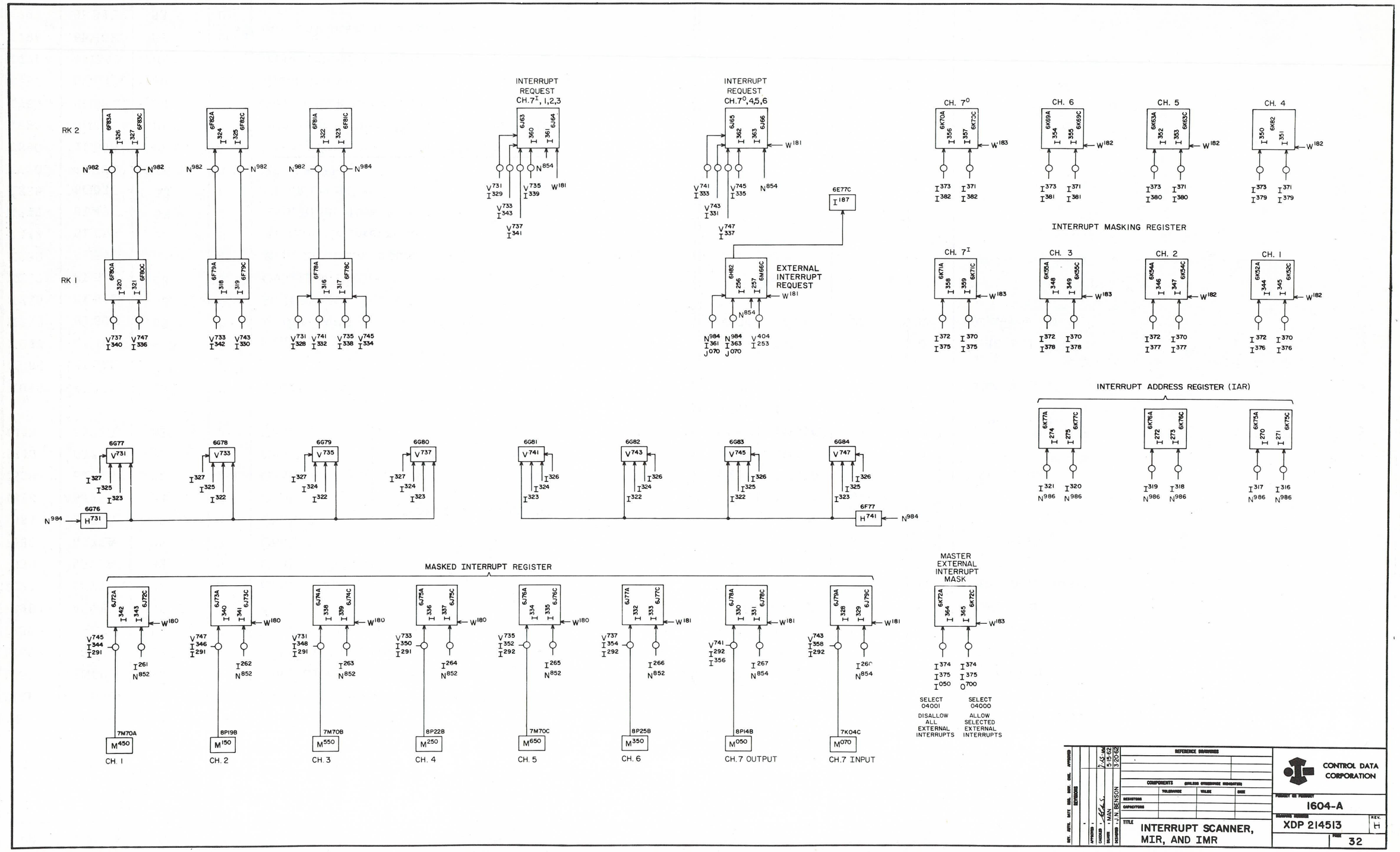

RK 2
RK 1
INTERRUPT REQUEST CH.7I, 1,2,3
INTERRUPT REQUEST CH.7O,4,5,6
EXTERNAL INTERRUPT REQUEST
CH. 7O
CH. 6
CH. 5
CH. 4
INTERRUPT MASKING REGISTER
CH. 7I
CH. 3
CH. 2
CH. 1
INTERRUPT ADDRESS REGISTER (IAR)
MASKED INTERRUPT REGISTER
MASTER EXTERNAL INTERRUPT MASK
SELECT 04001 DISALLOW ALL EXTERNAL INTERRUPTS
SELECT 04000 ALLOW SELECTED EXTERNAL INTERRUPTS
CH. 1
CH. 2
CH. 3
CH. 4
CH. 5
CH. 6
CH. 7 OUTPUT
CH. 7 INPUT
CONTROL DATA CORPORATION
1604-A
XDP 214513
REV. H
32
INTERRUPT SCANNER, MIR, AND IMR
J.N. BENSON

TERM	LOCATION	PAGE	QUAD.	DEFINITION
H012	4M76	5,25	2	$\overline{\text{Clear Control FF's}}$
I187	6E77C	32	1	$\overline{\text{External Interrupt}}$
I241	4K54C	8.1	0	f = 00 + 77 FF (Advance Clock)
I251	4N60	33	3	Adv. Clock
I256	6H82	32	1	$\overline{\text{External Interrupt}}$
I259	6K66C	53,30	0	Internal Interrupt Request
I296	4O59C	33	3	$\overline{\text{Adv. Clock}}$
I328	6J79A	32	3	Chnl.7 Input
I330	6J78A	32	3	Chnl. 7 Output
I332	6J77A	32	3	Chnl. 6
I334	6J76A	32	2	Chnl. 5
I336	6J75A	32	2	Chnl. 4
I338	6J74A	32	2	Chnl. 3
I340	6J73A	32	2	Chnl. 2
I342	6J72A	32	2	Chnl. 1
				} Masked Interrupt Res.
K055	4K15C	28	0	Initial Start
K066	4L15C	4,5	0	
K067	4L16C	4,5	0	Exit FF Slave
K233	6L50C	53	0	$\overline{\text{Divide Fault}}$
K235	6L51C	53	0	Shift Fault
K237	6L53C	53	1	Overflow Fault
K239	6L54C	53	1	Exp. Overflow Fault
K242	6L55A	53	0	Arithmetic Interrupt
K247	6L40C	53	1	Exp. Underflow Fault
K339	6G02C	53	1	Clock Overflow
K570	4N78A	10.2,23	3	$R^2 \rightarrow$ B FF
K690	4L63A	10.2	3	$\overline{\text{Interupt + Clock Request During 63 (I)}}$
K693	4N68C	10.2	3	Interrupt + Clock Request During 63 (II)
K753	6O62C	60	3	Adv. Clock Resync. Logic
K755	6O64A	60	3	Clock Wait FF
K771	4M54B	10.2	3	Input Transfer Active
K796	6K83B	53	0	Internal Interrupt Request FF
K797	6K84B	53	0	
K831	4P63C	10.0	2	S & T Seq.

TERM	LOCATION	PAGE	QUAD.	DEFINITION
N880	4O39A	10.2	3	S & T Seq.
N901	4O38C			Odd Clock Slave
N940	4M74A			Even Clock Slave
N946	4P60B			
N951	4N84B			Odd Clock Slave
V031	4M01	5	0	Jump Exit
V033	4M02	5	0	Full Exit
V035	4M03	5	0	Half Exit
V098	4K08A	5	1	RNI Seq.
V122	6N73	29	1	Resync. Pulse
V351	4K51A	8.1	1	
V352	4K52	8.1	1	RO Seq.
V354	4K61A	8.1	1	
V402	3M56A	9	0	
V410	3M63A	9	1	WO Seq.
V420	3M56C	9	0	
V550	4M57C	10.2	0	S & T Seq.
V552	4I10A	10.2	2	
V760	4N50C	8.1	3	RO Seq.
W143	4J82	25	0	Internal M.C.
W164	6L76	25	0	External M.C.

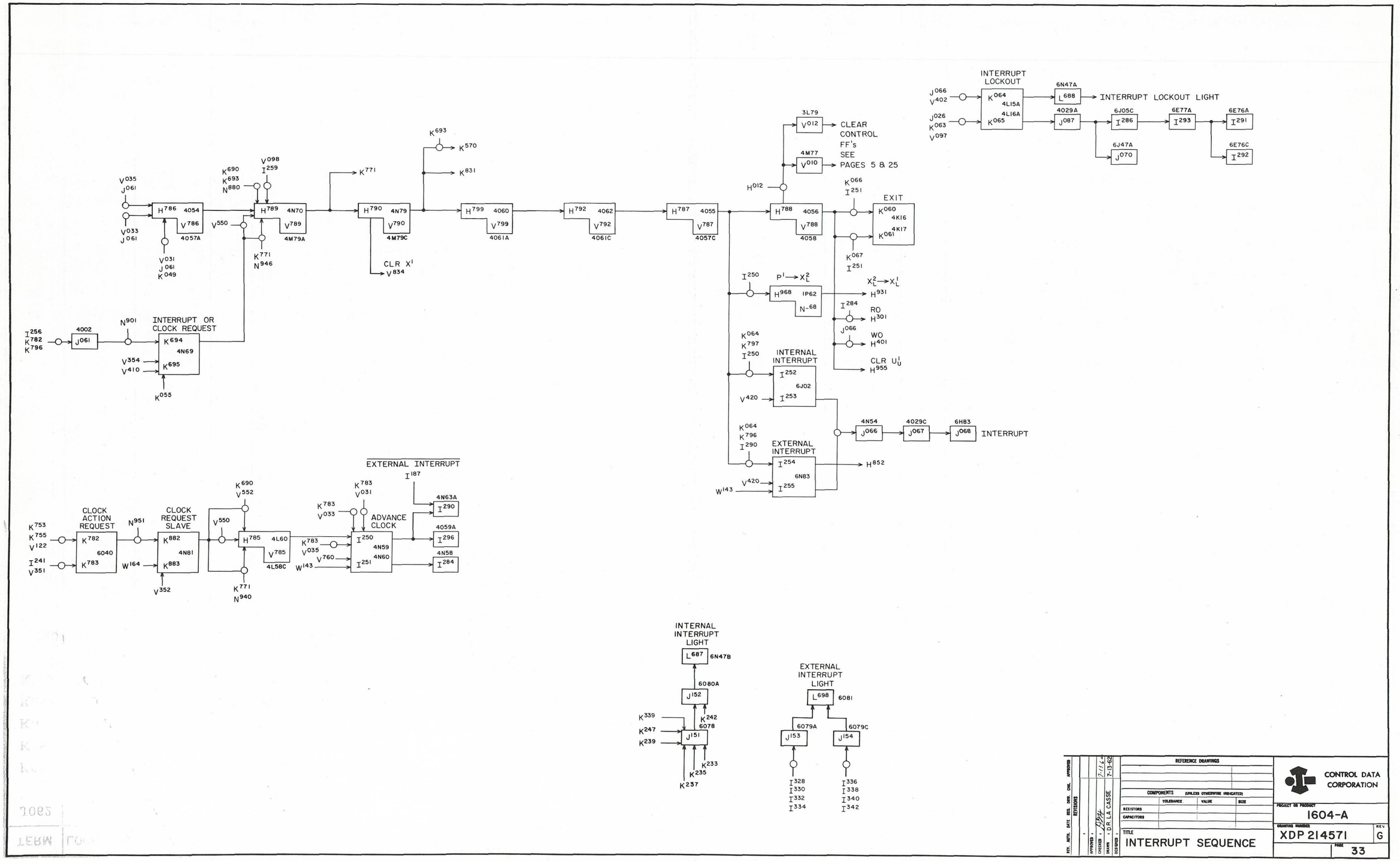
INTERRUPT LOCKOUT
INTERRUPT LOCKOUT LIGHT
CLEAR CONTROL FF's SEE PAGES 5 & 25
EXIT
INTERRUPT OR CLOCK REQUEST
INTERNAL INTERRUPT
EXTERNAL INTERRUPT
INTERRUPT
CLOCK ACTION REQUEST
CLOCK REQUEST SLAVE
ADVANCE CLOCK
EXTERNAL INTERRUPT
INTERNAL INTERRUPT LIGHT
EXTERNAL INTERRUPT LIGHT
CLR X¹
CLR U¹
RO
WO
REFERENCE DRAWINGS
COMPONENTS (UNLESS OTHERWISE INDICATED)
TOLERANCE
VALUE
SIZE
RESISTORS
CAPACITORS
REVISIONS
CHECKED
DRAWN
DESIGNED
D.R. LA CASSE
7-13-62
CONTROL DATA CORPORATION
PROJECT OR PRODUCT
1604-A
DRAWING NUMBER
XDP 214571
REV
G
TITLE
INTERRUPT SEQUENCE
PAGE
33

TERM	LOCATION	PAGE	QUAD.	DEFINITION
J062	4J62	4	0	Exit FF Clear
K021	4J78C	28	0	Manual Control
K050	4L12B	28	1	$\overline{\text{Stop II}}$
K052	4L14B	28	1	$\overline{\text{Stop I}}$
K054	4K15A	28	0	$\overline{\text{Initial Start}}$
K143	7O74C	28	0	Test Mode
W780	4P14A	60	3	Buffer Active

TERM	LOCATION	PAGE	QUAD.	DEFINITION

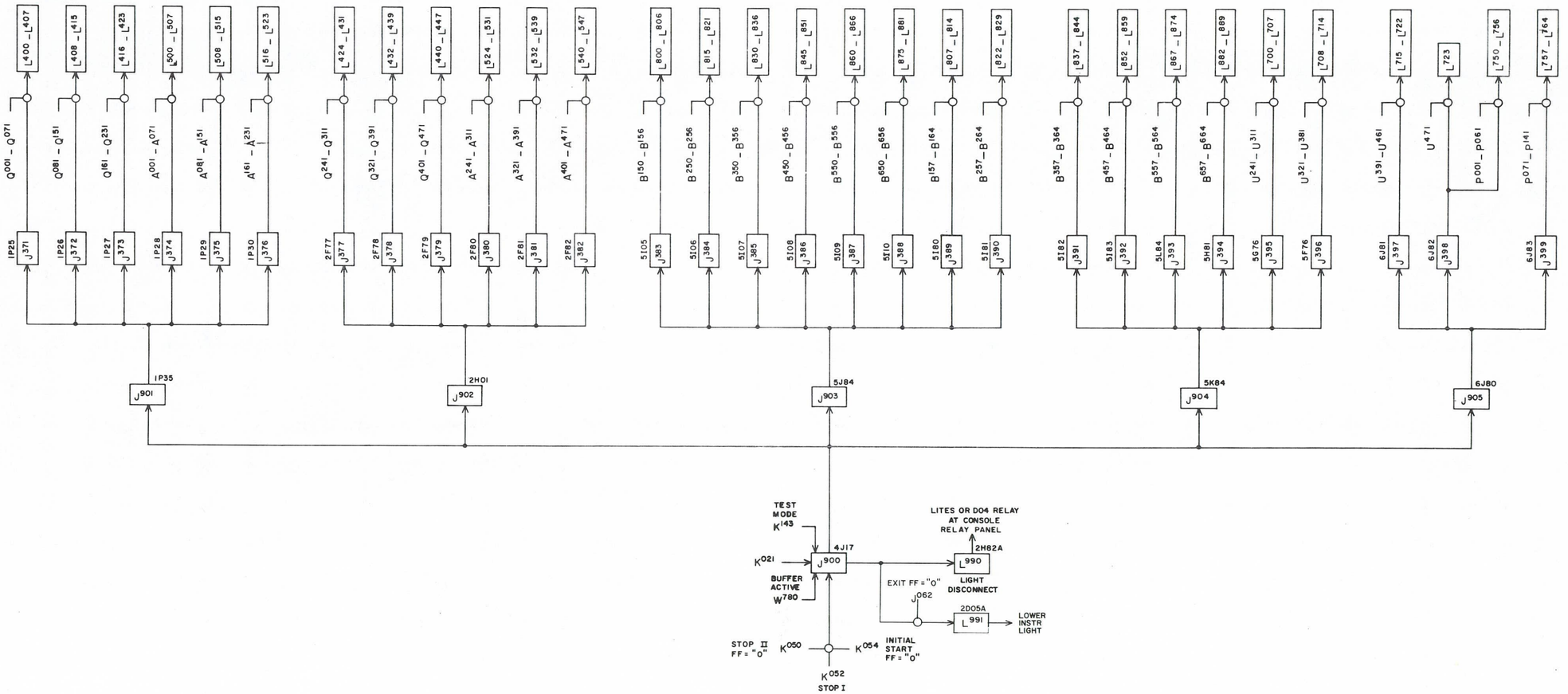

REV.	AUTH.	DATE	REQ.	DRW.	CHK.	APPROVED
REVISIONS						
APPROVED						
CHECKED						
DRAWN	R. MILLER	2-26-60				
DESIGNED	S. ASCHENBRENNER	1-14-59				

REFERENCE DRAWINGS

COMPONENTS (UNLESS OTHERWISE INDICATED)

	TOLERANCE	VALUE	SIZE
RESISTORS			
CAPACITORS			

TITLE

LOGIC DIAGRAM
DIGIT DISPLAY GATES

CONTROL DATA CORPORATION

PRODUCT OR PRODUCT: 1604-A

DRAWING NUMBER: XDP 214581

PAGE 34

BREAK POINT DIGIT SWITCHES

WHEEL-4	M-SYMBOL	JACK	WHEEL-3	M-SYMBOL	JACK	WHEEL-2	M-SYMBOL	JACK	WHEEL-1	M-SYMBOL	JACK	WHEEL-Ø	M-SYMBOL	JACK
0	M^{940}	G03C	0	M^{930}	G01A	0	M^{920}	H06B	0	M^{910}	H03C	0	M^{900}	H01A
1	M^{941}	G04A	1	M^{931}	G01B	1	M^{921}	H06C	1	M^{911}	H04A	1	M^{901}	H01B
2	M^{942}	G04B	2	M^{932}	G01C	2	M^{922}	H07A	2	M^{912}	H04B	2	M^{902}	H01C
3	M^{943}	G04C	3	M^{933}	G02A	3	M^{923}	H07B	3	M^{913}	H04C	3	M^{903}	H02A
4	M^{944}	G05A	4	M^{934}	G02B	4	M^{924}	H07C	4	M^{914}	H05A	4	M^{904}	H02B
5	M^{945}	G05B	5	M^{935}	G02C	5	M^{925}	H08A	5	M^{915}	H05B	5	M^{905}	H02C
6	M^{946}	G05C	6	M^{936}	G03A	6	M^{926}	H08B	6	M^{916}	H05C	6	M^{906}	H03A
7	M^{947}	G06A	7	M^{937}	G03B	7	M^{927}	H08C	7	M^{917}	H06A	7	M^{907}	H03B

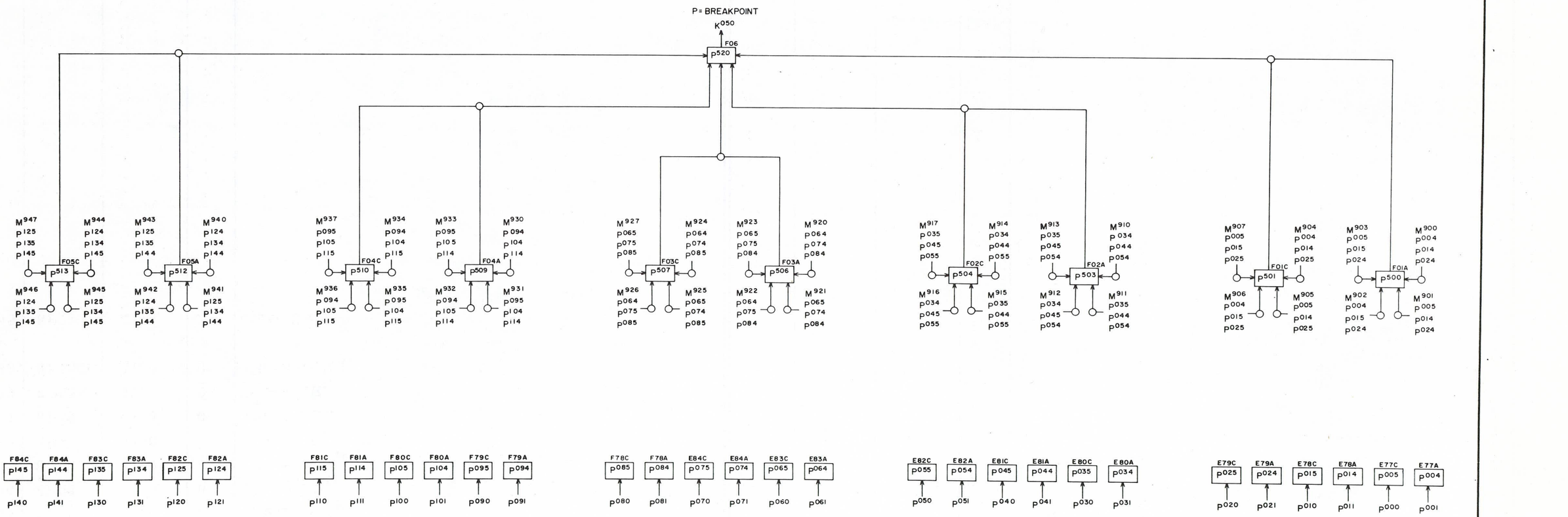

NOTE:
ALL JACKS ON CHASSIS 1
UNLESS OTHERWISE SHOWN.

REV.	NOTE	DATE	APPROVED
REVISIONS			
APPROVED			
CHECKED			
DRAWN	R. MILLER	3-25-66	
DESIGNED	A. ASHENBRENNER	11-8-65	

REFERENCE DRAWINGS

CONTROL DATA CORPORATION

PROJECT OR PRODUCT: 1604-A

DRAWING NUMBER: XDP 214574 REV. E

TITLE: LOGIC DIAGRAM BREAK POINT TRANSLATOR

PAGE 35

TERM	LOCATION	PAGE	QUAD.	DEFINITION
N628	7P65	17.0	0	$I^7 \rightarrow CCR_L$
N629	7P66	17.0	0	Clear CCR_L
N630	7P68	17.0	0	$I^7 \rightarrow CCR_L$
N631	7P69	17.0	0	Clear CCR_L
N632	7P70A	17.0	0	$I^7 \rightarrow CCR_L$
N633	7P70C	17.0	0	Clear CCR_L
N634	8P37	17.0	0	$I^7 \rightarrow CCR_U$
N635	8P38	17.0	0	Clear CCR_U
N636	8P48	17.0	0	$I^7 \rightarrow CCR_U$
N637	8P49	17.0	0	Clear CCR_U
N638	8P55A	17.0	0	$I^7 \rightarrow CCR_U$
N639	8P55C	17.0	0	Clear CCR_U
V445	8P71C	17.0	1	Aux. Seq.

TERM	LOCATION	PAGE	QUAD.	DEFINITION

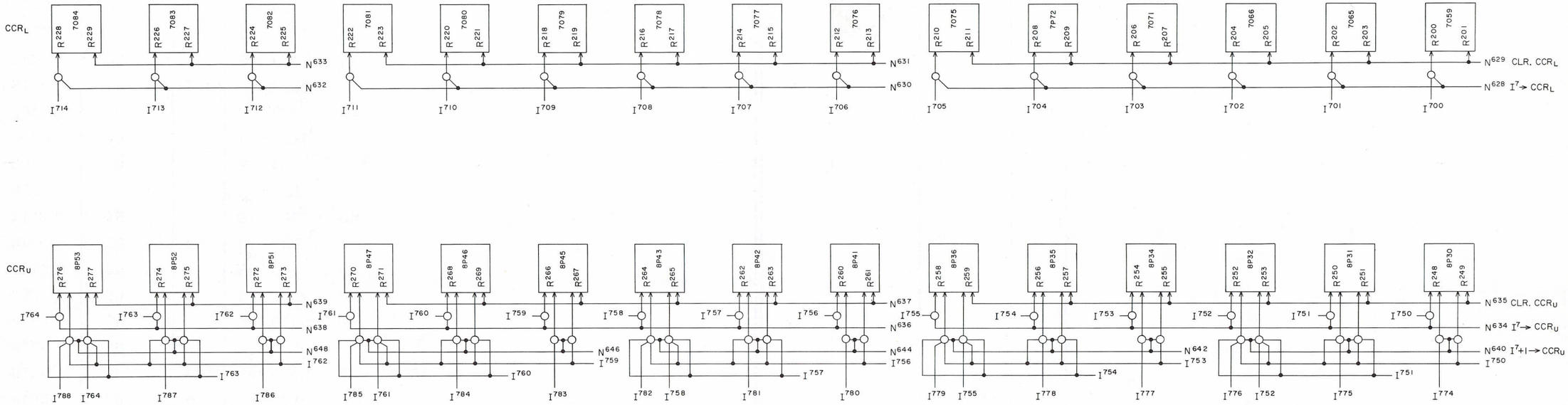

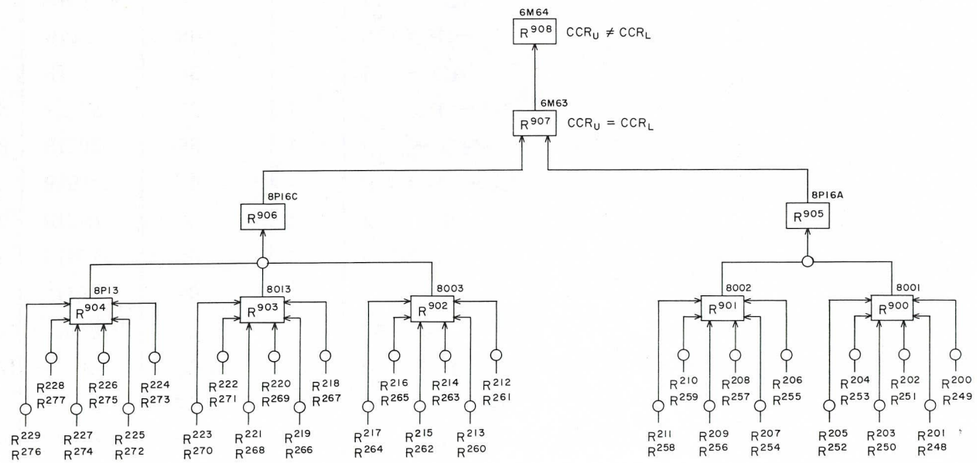

COMPARATOR

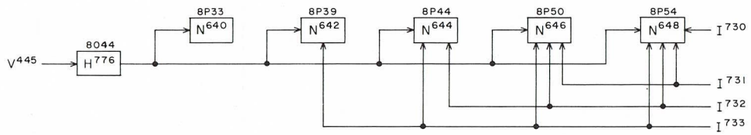

$I^7+1 \rightarrow CCR_U$

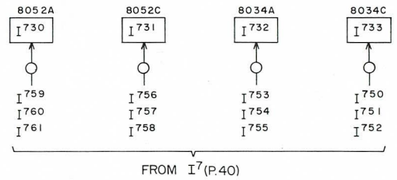

FROM I^7 (P.40)

REV.	AUTH.	DATE	REQ. DRW.	CHG.	APPROVED
REVISIONS					
	-				APPROVED -
		4-27-62			CHECKED - D. W. S
		4-27-62			DRAWN - R. R. M.
		3-19-62			DESIGNED - J. N. BENSON

REFERENCE DRAWINGS

COMPONENTS (UNLESS OTHERWISE INDICATED)	TOLERANCE	VALUE	SIZE
RESISTORS			
CAPACITORS			

TITLE COMMON CONTROL REGISTER CCR_L & CCR_U AND COMPARATOR

CONTROL DATA CORPORATION

PROJECT OR PRODUCT 1604A

DRAWING NUMBER XDP 214501 REV A

PAGE 36

TERM	LOCATION	PAGE	QUAD.	DEFINITION
N736	8E08	39	1	$I^8 \rightarrow CR$
N737	8E07	39	1	Set CR → 1's
N738	8H72	39	1	$I^8 \rightarrow CR$
N739	8D76	39	1	Set CR → 1's
N740	8I34A	39	1	$I^8 \rightarrow CR$
N741	8I51A	39	1	Set CR → 1's
N742	8F08	39	1	$I^8 \rightarrow CR$
N743	8F07	39	1	Set CR → 1's
N744	8H82	39	1	$I^8 \rightarrow CR$
N745	8H81	39	1	Set CR → 1's
N746	8I34C	39	1	$I^8 \rightarrow CR$
N747	8I51C	39	1	Set CR → 1's
N748	8G08	39	1	$I^8 \rightarrow CR$
N749	8G07	39	1	Set CR → 1's
N750	8I75	39	1	$I^8 \rightarrow CR$
N751	8I74	39	1	Set CR → 1's
N752	8K23A	39	1	$I^8 \rightarrow CR$
N753	8K64A	39	1	Set CR → 1's
N754	8G09	39	1	$I^8 \rightarrow CR$
N755	8F09	39	1	Set CR → 1's
N756	8I11	39	1	$I^8 \rightarrow CR$
N757	8I10	39	1	Set CR → 1's
N758	8K23C	39	1	$I^8 \rightarrow CR$
N759	8K64C	39	1	Set CR → 1's
N760	8I09	39	1	$I^8 \rightarrow CR_U$
N761	8I08	39	1	Set $CR_U \rightarrow$ 1's
N762	8J64	39	1	$I^8 \rightarrow CR_U$
N763	8J54	39	1	Set $CR_U \rightarrow$ 1's
N764	8J84A	39	1	$I^8 \rightarrow CR_U$
N765	8J83A	39	1	Set $CR_U \rightarrow$ 1's
N766	8L54	39	1	$I^8 \rightarrow CR_U$
N767	8K54	39	1	Set $CR_U \rightarrow$ 1's
N768	8J82	39	1	$I^8 \rightarrow CR_U$
N769	8J81	39	1	Set $CR_U \rightarrow$ 1's
N770	8J84C	39	1	$I^8 \rightarrow CR_U$
N771	8J83C	39	1	Set $CR_U \rightarrow$ 1's

TERM	LOCATION	PAGE	QUAD.	DEFINITION

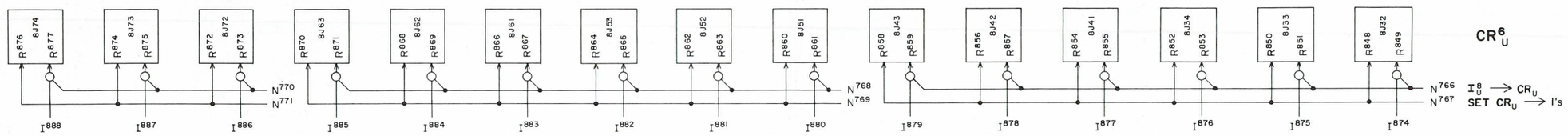

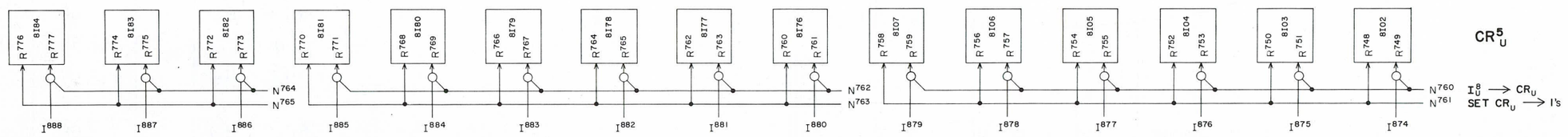

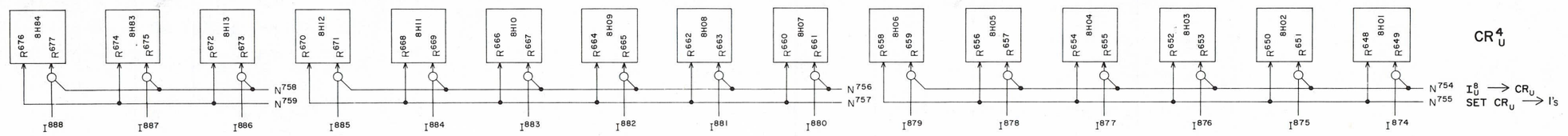

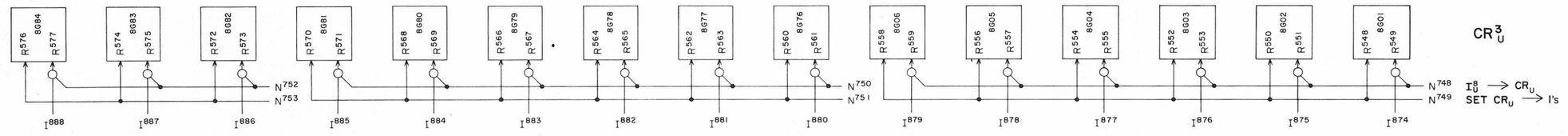

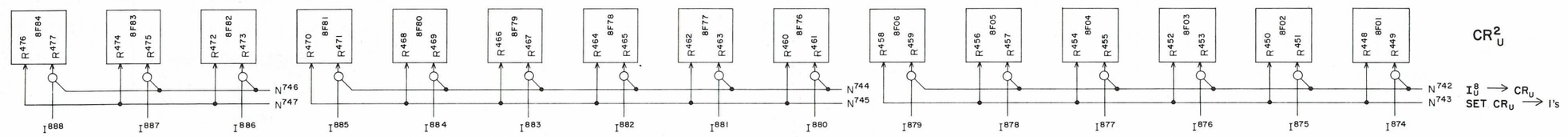

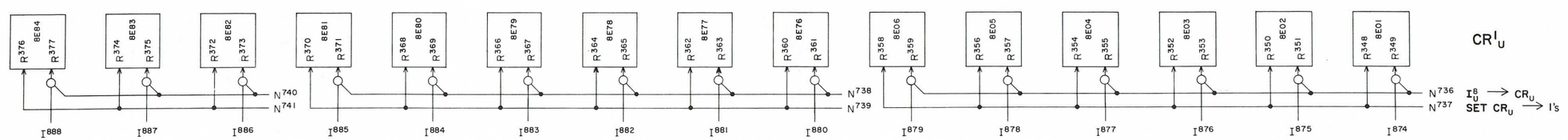

REV.	AUTH.	DATE	DES. SUPR.	CHK.	APPROVED
REVISIONS					
	-				
APPROVED	-				
CHECKED	-	D. W. S.			5-2-62
DRAWN	-	R. R. M.			5-2-62
DESIGNED	-	J. N. BENSON			3-28-62

REFERENCE DRAWINGS

COMPONENTS (UNLESS OTHERWISE INDICATED)

	TOLERANCE	VALUE	SIZE
RESISTORS			
CAPACITORS			

TITLE
CONTROL REGISTER
CR^{1}_{U} THRU CR^{6}_{U}

CONTROL DATA CORPORATION

PROJECT OR PRODUCT
1604-A

DRAWING NUMBER
XDP 214503

REV
A

PAGE
37

TERM	LOCATION	PAGE	QUAD.	DEFINITION
N700	7K01	39	0	$I^8 \rightarrow CR_L$
N701	7E07	39	0	Set $CR_L \rightarrow$ 1's
N702	7J45	39	0	$I^8 \rightarrow CR_L$
N703	7D81	39	0	Set $CR_L \rightarrow$ 1's
N704	7J47A	39	0	$I^8 \rightarrow CR_L$
N705	7D83A	39	0	Set $CR_L \rightarrow$ 1's
N706	7K02	39	0	$I^8 \rightarrow CR_L$
N707	7F07	39	0	Set $CR_L \rightarrow$ 1's
N708	7J46	39	0	$I^8 \rightarrow CR_L$
N709	7D82	39	0	Set $CR_L \rightarrow$ 1's
N710	7J47C	39	0	$I^8 \rightarrow CR_L$
N711	7D83C	39	0	Set $CR_L \rightarrow$ 1's
N712	7K03	39	0	$I^8 \rightarrow CR_L$
N713	7G07	39	0	Set $CR_L \rightarrow$ 1's
N714	7J48	39	0	$I^8 \rightarrow CR_L$
N715	7H12	39	0	Set $CR_L \rightarrow$ 1's
N716	7J69A	39	0	$I^8 \rightarrow CR_L$
N717	7I75A	39	0	Set $CR_L \rightarrow$ 1's
N718	7I34	39	0	$I^8 \rightarrow CR_L$
N719	7G08	39	0	Set $CR_L \rightarrow$ 1's
N720	7K28	39	0	$I^8 \rightarrow CR_L$
N721	7G09	39	0	$CR_L \rightarrow$ 1's
N722	7K29A	39	0	$I^8 \rightarrow CR_L$
N723	7I51A	39	0	$CR_L \rightarrow$ 1's
N724	7E09	39	0	$I^8 \rightarrow CR_L$
N725	7I07	39	0	$CR_L \rightarrow$ 1's
N726	7J51	39	0	$I^8 \rightarrow CR_L$
N727	7I74	39	0	$CR_L \rightarrow$ 1's
N728	7J69C	39	0	$I^8 \rightarrow CR_L$
N729	7I75C	39	0	$CR_L \rightarrow$ 1's
N730	7F09	39	0	$I^8 \rightarrow CR_L$
N731	7I09	39	0	$CR_L \rightarrow$ 1's
N732	7J53	39	0	$I^8 \rightarrow CR_L$
N733	7J20	39	0	$CR_L \rightarrow$ 1's
N734	7K29C	39	0	$I^8 \rightarrow CR_L$
N735	7I51C	39	0	$CR_L \rightarrow$ 1's

TERM	LOCATION	PAGE	QUAD.	DEFINITION

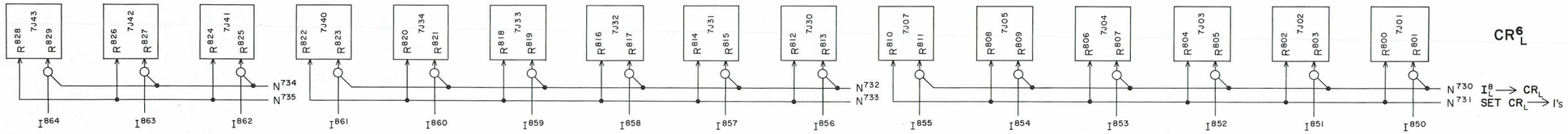

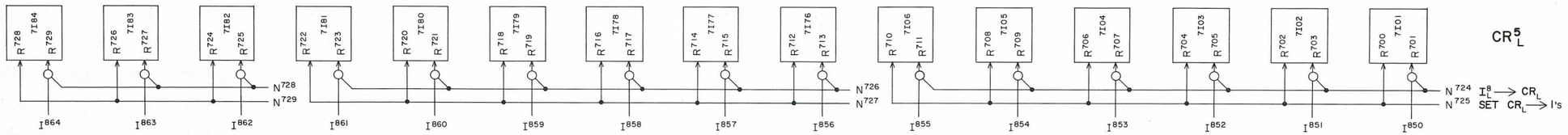

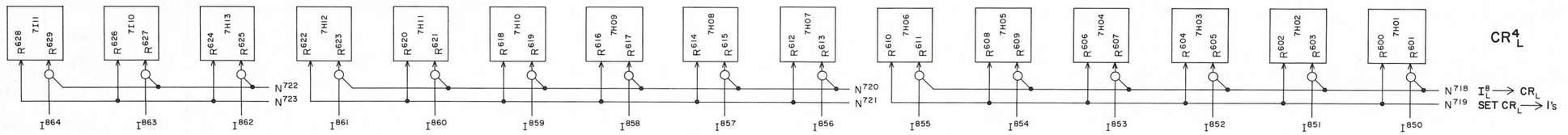

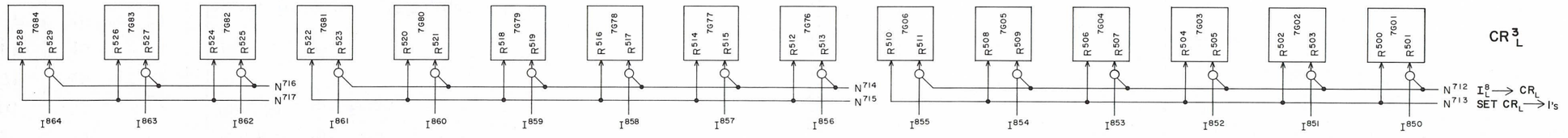

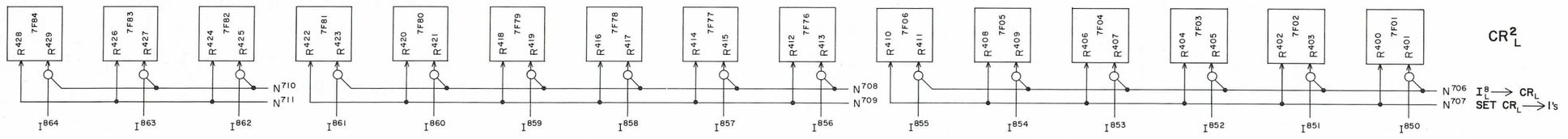

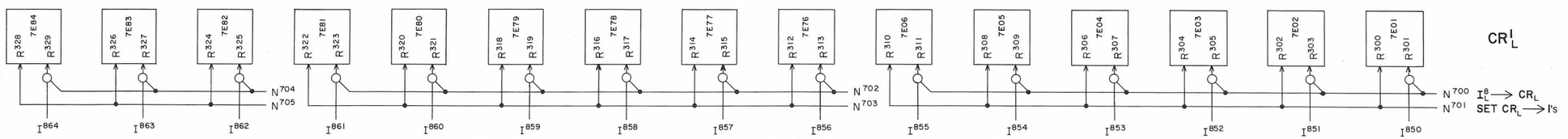

REV.	AUTH.	DATE	REVISIONS
-			

APPROVED - 5-2-62 D.W.S.
CHECKED - 5-2-62 R.R.M.
DRAWN - 3-27-62 J.M. HENSON
DESIGNED -

REFERENCE DRAWINGS

COMPONENTS (UNLESS OTHERWISE INDICATED)

	TOLERANCE	VALUE	SIZE
RESISTORS			
CAPACITORS			

TITLE
CONTROL REGISTER
CR^1_L THRU CR^6_L

CONTROL DATA CORPORATION

PROJECT OR PRODUCT
1604-A

DRAWING NUMBER
XDP 214502

REV
A

PAGE
38

TERM	LOCATION	PAGE	QUAD.	DEFINITION
J178	6O75	45	3	Rank I of Scanner → ARD
J835	4O41A	42	2	Read Lower
J836	4O41C	42	2	Read Upper
J841	7P24	42	0	Write Lower
J843	8N02	42	1	Write Upper
K074	6P31A	42	2	Aux. Reference Register (ARR)
K075	6P31C	42	2	
K076	6P32A	42	2	
K077	6P32C	42	2	
K078	6P33A	42	2	
K079	6P33C	42	2	
K152	4L57A	17.0	3	FF's Used For S^1, S^2 → ARD
K153	4L57C	17.0	3	
K154	4L56A	17.0	3	
K155	4L56C	17.0	3	
K217	4D42B	16	0	f = 74.1 - 74.6 FF
K623	3J11B	54.0	2	Even Storage Busy
K663	4I76B	54.1	2	Odd Storage Busy
K774	6P37B	45	1	Aux. Reference Designator (ARD)
K775	6P38B	45	1	
K776	6P39B	45	1	
K777	6P41B	45	1	
K778	6P42B	45	1	
K779	6P43B	45	1	
K800	6P48B	45	2	Rank I Aux. Scanner
K801	6P50B	45	2	
K802	6P49B	45	2	
K803	6P51B	45	2	
K804	6O49B	45	2	
K805	6P52B	45	2	
N559	6P40	42	0	ARR → ARD
N656	8N04A	42	1	High Speed Storage Sequence
N657	8N04C	42	1	
N658	7P30A	42	1	
N659	7P30C	42	1	

TERM	LOCATION	PAGE	QUAD.	DEFINITION
V174	4O14C	42	0	H.S. Storage Seq.
V180	4O31C	42	1	
V181	4O34	42	1	
V190	4O52A	17.1	0	Aux. Seq. + H.S. Storage Seq.
V440	4N09	17.0	0	Aux. Seq.
V445	8P71C	17.1	1	
V447	8O61	17.0	1	
V474	4M53C	17.1	1	
V480	6L59	17.1	1	
V485	6O83	17.0	1	
W162	7K50	25	0	External M.C..
W163	7J49	25	0	

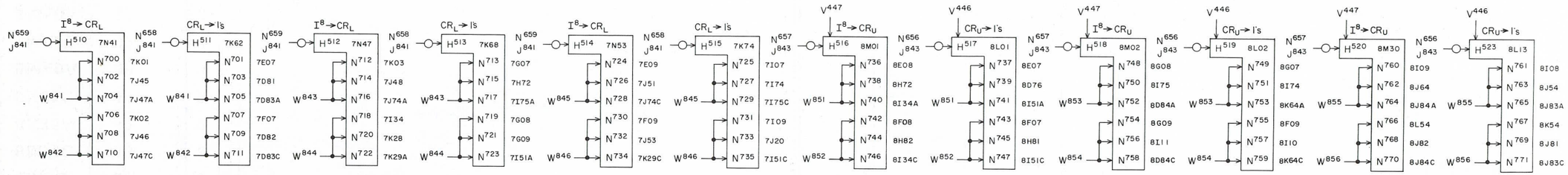

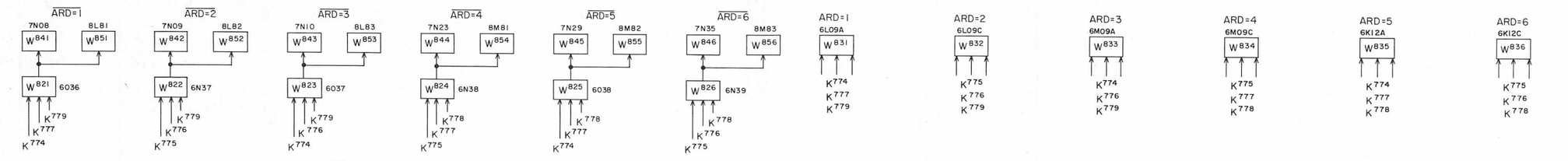

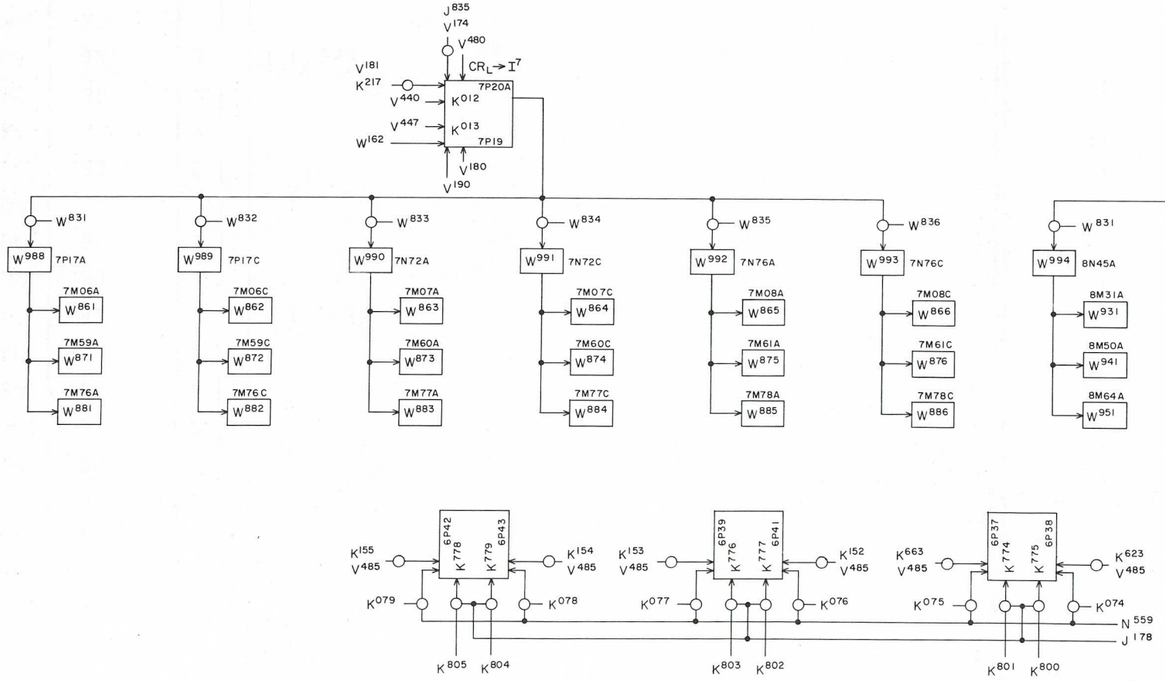

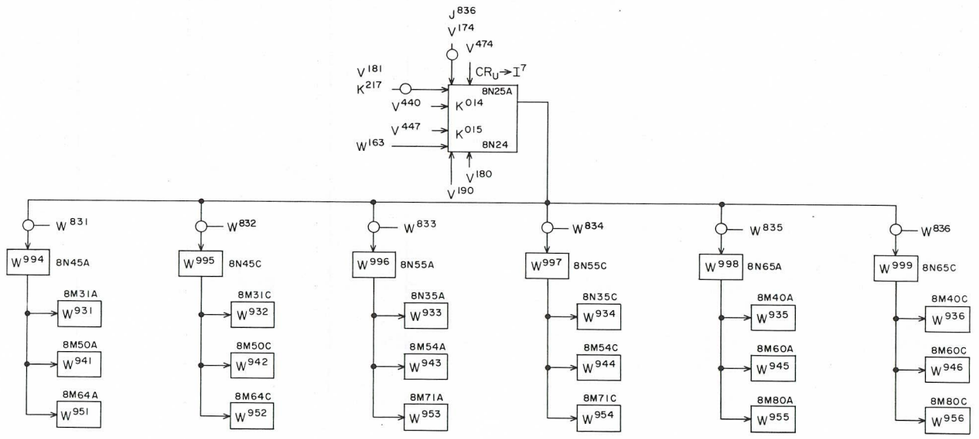

AUXILIARY REFERENCE DESIGNATOR

REV.	AUTH.	DATE	REG.	CHK.	APPROVED
REVISIONS					
-					
APPROVED	-			5-3-62	
CHECKED	-	D.W.S.		5-3-62	
DRAWN	-	R.R.M.			
DESIGNED	-	J.N. BENSON		4-2-62	

REFERENCE DRAWINGS

COMPONENTS (UNLESS OTHERWISE INDICATED)

	TOLERANCE	VALUE	SIZE
RESISTORS			
CAPACITORS			

TITLE: CONTROL REGISTER CONTROL

CONTROL DATA CORPORATION

PROJECT OR PRODUCT: 1604-A

DRAWING NUMBER: XDP 214504 REV E

PAGE 39

TERM	LOCATION	PAGE	QUAD.	DEFINITION
W838	7M71A	42	1	$I^5I^6 \rightarrow I^8$
W848	7M71C	42	1	
W849	8O53A	17.0	1	$CCR_U \rightarrow I^8$
W858	7M72A	42	3	$I^5I^6 \rightarrow I^8$
W859	8O53C	17.0	1	$CCR_U \rightarrow I^8$
W861	7M06A	39	2	
W862	7M06C	39	2	
W863	7M07A	39	2	$CR_L \rightarrow I^7$
W864	7M07C	39	2	
W865	7M08A	39	2	
W866	7M08C	39	2	
W868	8P17C	42	3	$I^5I^6 \rightarrow I^8$
W871	7M59A	39	2	
W872	7M59C	39	2	
W873	7M60A	39	2	$CR_L \rightarrow I^7$
W874	7M60C	39	2	
W875	7M61A	39	2	
W876	7M61C	39	2	
W878	8P28A	42	3	$I^5I^6 \rightarrow I^8$
W881	7M76A	39	2	
W882	7M76C	39	2	
W883	7M77A	39	2	$CR_L \rightarrow I^7$
W884	7M77C	39	2	
W885	7M78A	39	2	
W886	7M78C	39	2	
W888	8P28C	42	3	$I^5I^6 \rightarrow I^8$
W931	8M31A	39	3	
W932	8M31C	39	3	
W933	8N35A	39	3	
W934	8N35C	39	3	
W935	8M40A	39	3	
W936	8M40C	39	3	
W941	8M50A	39	3	$CR_U \rightarrow I^7$
W942	8M50C	39	3	
W943	8M54A	39	3	
W944	8M54C	39	3	
W945	8M60A	39	3	
W946	8M60C	39	3	
W951	8M64A	39	3	
W952	8M64C	39	3	
W953	8M71A	39	3	$CR_U \rightarrow I^7$
W954	8M71C	39	3	
W955	8M80A	39	3	
W956	8M80C	39	3	
W869	8O54A	17	3	

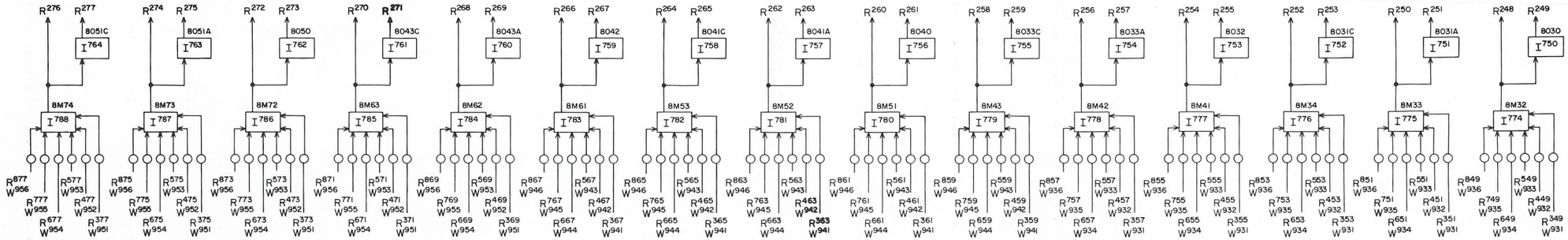

REV.	APPVD.	DATE	DES.	ENG.	CHK.	APPROVED
						5.8.62
						5.8.62
						3.20.62

REVISIONS

APPROVED - CHECKED - D.H DRAWN - MAN DESIGNED - J.N. BENSON

REFERENCE DRAWINGS

COMPONENTS (UNLESS OTHERWISE INDICATED)

	TOLERANCE	VALUE	SIZE
RESISTORS			
CAPACITORS			

TITLE: INVERTER RANKS I^7 AND I^8

CONTROL DATA CORPORATION

PROJECT OR PRODUCT: 1604-A

DRAWING NUMBER: XDP 214506 REV C

PAGE 40

TERM	LOCATION	PAGE	QUAD.	DEFINITION
R039	4L42A	44	1	$CCR_U \neq$ 00001-6
R059	8P72C	44	1	CCR_U = 00001-6
V171	4O03A	42	0	H.S. Storage Seq.
V181	4O34	42	1	
V444	4N24C	17.0	0	Aux. Seq.
W140	4K76A	25	0	Internal M.C.

TERM	LOCATION	PAGE	QUAD.	DEFINITION

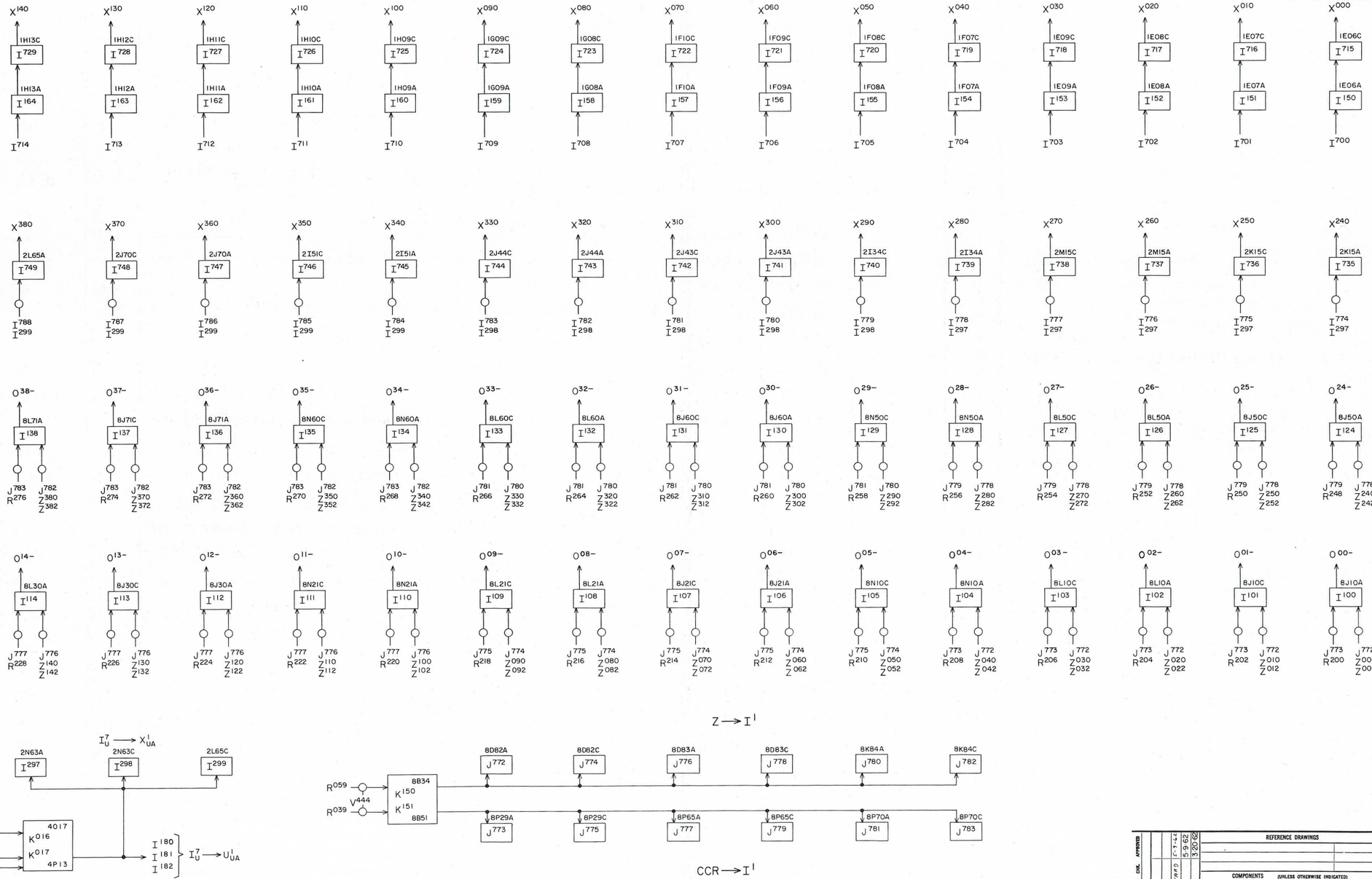

REVISIONS	KEY	AUTH.	DATE	REQ.	DRW.	CHK.	APPROVED
-							

APPROVED J
CHECKED Dolores Ivonard 5-7-62
DRAWN J MAN 5-9-62
DESIGNED J.N. BENSON 3-20-62

REFERENCE DRAWINGS

COMPONENTS (UNLESS OTHERWISE INDICATED)

	TOLERANCE	VALUE	SIZE
RESISTORS			
CAPACITORS			

TITLE
$I^7 \rightarrow X, Z \rightarrow I^1$ AND CCR $\rightarrow I^1$

CONTROL DATA CORPORATION

PROJECT OR PRODUCT
1604-A

DRAWING NUMBER
XDP 214507 B

PAGE 41

TERM	LOCATION	PAGE	QUAD.	DEFINITION
H035	4L03	4,5	2	Full Exit
H047	4M07	4,5	3	Half Exit
H478	4N66	17.1	1	Aux. Seq.
H638	7P71	17.0	0	$I^7 \rightarrow CCR$
H639	7H84	17.0	0	Clear CCR
H986	4O72	45.0	1	Rank I of Scanner → ARD
I251	4N60	33	3	Adv. Clock
I296	4O59C	33	3	$\overline{\text{Adv. Clock}}$
J064	3P69	4	0	Exit FF Clear
J065	3P70	4	0	Exit FF Set
J259	4H11A	17.0	0	Aux. Seq. Wait Storage
J330	3I82B	54.0,57	0	Read Lower Address (Even)
J332	3I84	54.0,57	0	Read Lower Address (Even)
J350	4H13B	54.1,57	0	Read Lower Address (Odd)
J352	4I11	54.1,57	0	Read Lower Address (Odd)
J353	4H12C	54.1	0	Write Lower Address (Odd)
J355	4H12A	54.1	0	Write Upper Address (Odd)
J831	4J59A	57	3	Enable Partial Write Lower
J833	4J59C	57	3	$\overline{\text{Enable Partial Write Upper}}$
J844	3N76C	17.0	2	$\overline{I^0 \rightarrow I^5 I^6}$
J846	4O37A	17.0	2	$I^0 \rightarrow I^5 I^6$
K216	4P42C	16	0	f = 74.1 - 74.6 FF
K217	4D42B	16	0	
K253	4N17C	17.0	2	Aux. Seq. Wait Storage
K254	4P28B	45	1	$\overline{\text{Aux. Req.}}$
K256	4P41B	45	1	
K622	3H01B	54.0	2	Storage Busy FF (Even)
K623	3J11B	54.0	2	
K662	4I76A	54.1	2	Storage Busy FF (Odd)
K663	4I76C	54.1	2	
K768	4O74	45	1	$\overline{\text{Inhibit Rank I of Scanner → ARD}}$
N086	6O76	16	0	j → ARR

TERM	LOCATION	PAGE	QUAD.	DEFINITION
P059	4L30C	44	0	P^1 = 00001-6
R059	8P72C	44	1	CCR_U = 00001-6
U059	4L17C	44	0	U^2 = 00001-6
V440	4N09	17.0	0	Aux. Seq.
V444	4N24C	17.0	0	
V446	8063	17.0	1	
V447	8O61	17.0	1	
V474	4M53C	17.1	1	
V480	6L69	17.1	1	
V706	4O52C	16	0	EXF Seq.
V910	3H11	57	0	Initiate Storage
V912	4J83	57	2	
W140	4K76A	25	0	Internal M.C.
W143	4J82	25	0	
W162	7K50	25	0	External M.C.
W163	7J49	25	0	
W219	1A51B			Write Lower Address (Odd)
W229	2A51B			
W239	3A51C			Write Upper Address (Odd)
W259	5A51B			
W269	6A51B			
W279	7A51A			

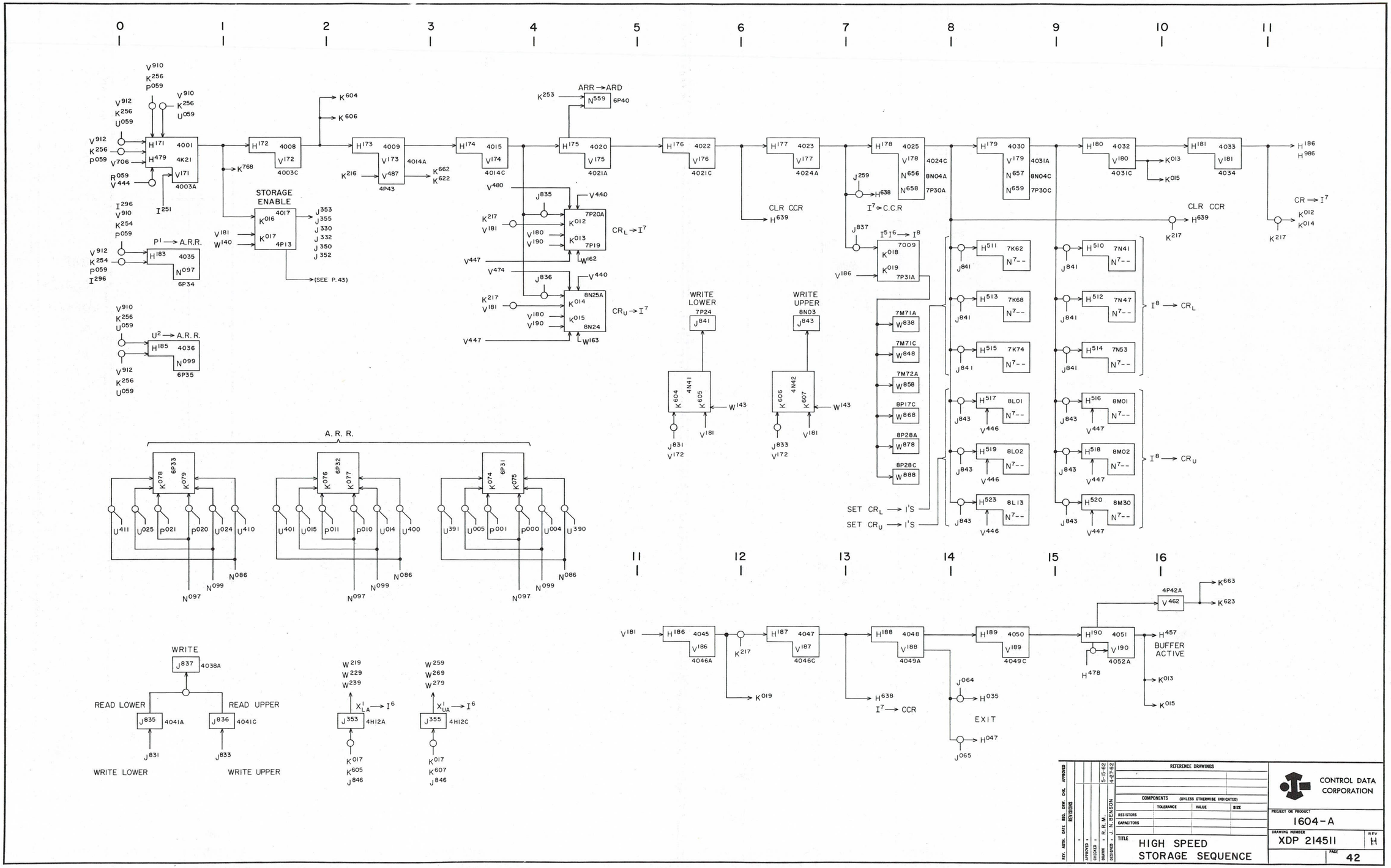

REV.	AUTH.	DATE	REQ.	DRW.	CHK.	APPROVED
REVISIONS						
APPROVED						
CHECKED						
DRAWN	R. R. M.	5-15-62				
DESIGNED	J. N. BENSON	4-27-62				

REFERENCE DRAWINGS

COMPONENTS (UNLESS OTHERWISE INDICATED)

	TOLERANCE	VALUE	SIZE
RESISTORS			
CAPACITORS			

TITLE: HIGH SPEED STORAGE SEQUENCE

CONTROL DATA CORPORATION

PROJECT OR PRODUCT: 1604-A

DRAWING NUMBER: XDP 214511 — REV: H

PAGE: 42

TERM	LOCATION	PAGE	QUAD.	DEFINITION
V171	4O03A	42	0	H.S. Storage Seq.
V181	4O34	42	1	
W140	4K76A	25	0	Internal M.C.

TERM	LOCATION	PAGE	QUAD.	DEFINITION

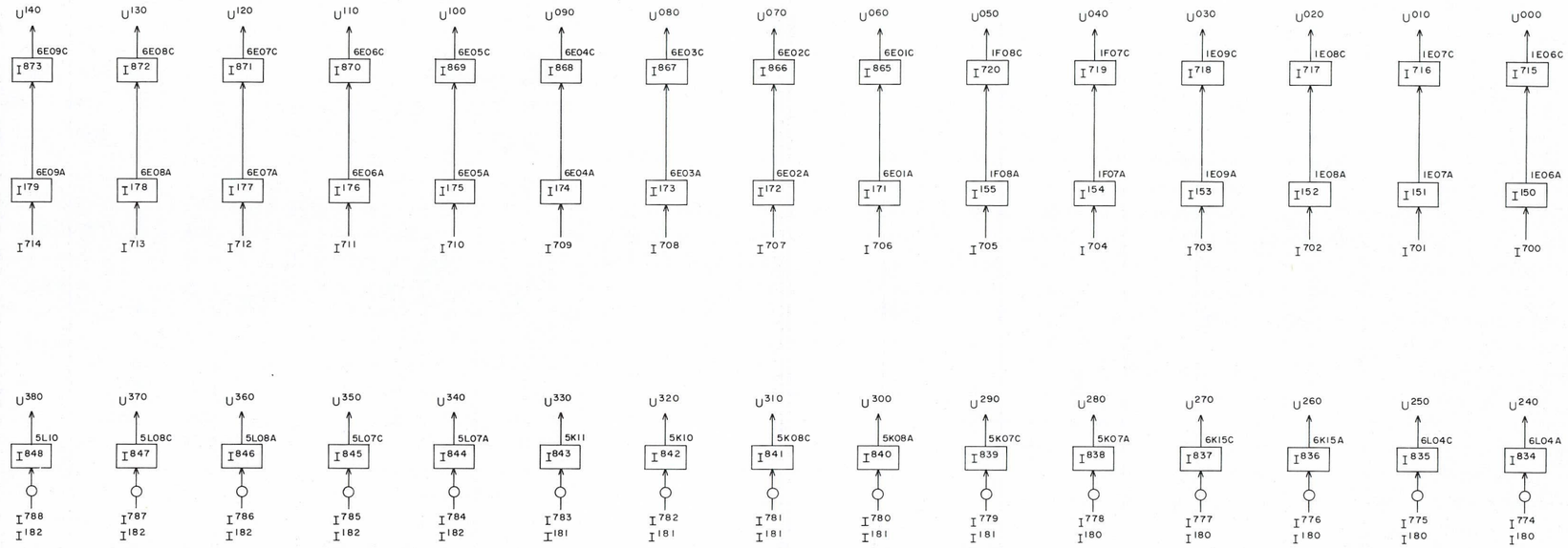

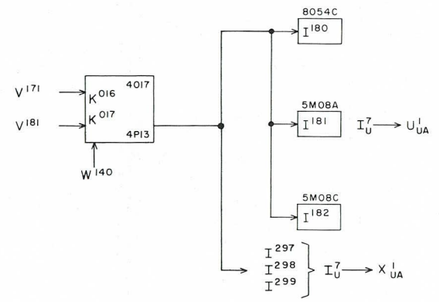

REV.	AUTH.	DATE	REG.	DWK.	CHK.	APPROVED
REVISIONS						
-						

APPROVED -
CHECKED - D. W. S. 6-1-62
DRAWN - R. R. M. 6-1-62
DESIGNED - J. N. BENSON 5-21-62

REFERENCE DRAWINGS

COMPONENTS (UNLESS OTHERWISE INDICATED)

	TOLERANCE	VALUE	SIZE
RESISTORS			
CAPACITORS			

TITLE

TRANSFER $I^7 \rightarrow U^1$

CONTROL DATA CORPORATION

PROJECT OR PRODUCT
1604-A

DRAWING NUMBER
XDP 214560

REV
A

TERM	LOCATION	PAGE	QUAD.	DEFINITION
J677	4L43A	57	0	Storage Initiate
K074	6P31A	42	2	ARR (Lowest Bit)
K075	6P31C	42	2	
K603	5J65B	57	0	Storage Initiate

TERM	LOCATION	PAGE	QUAD.	DEFINITION

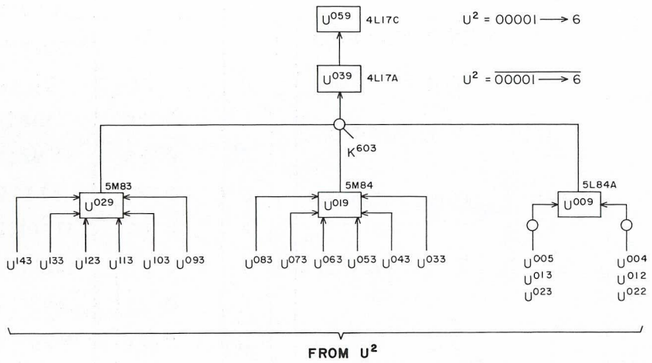

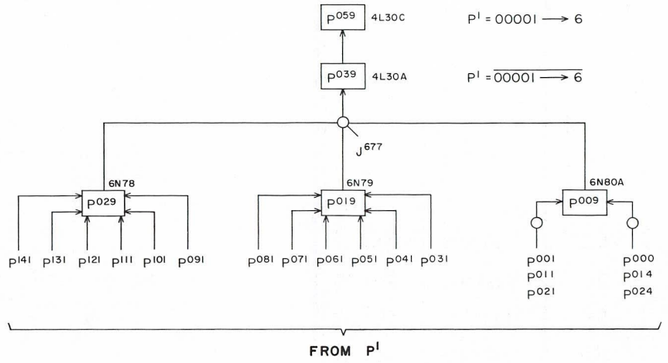

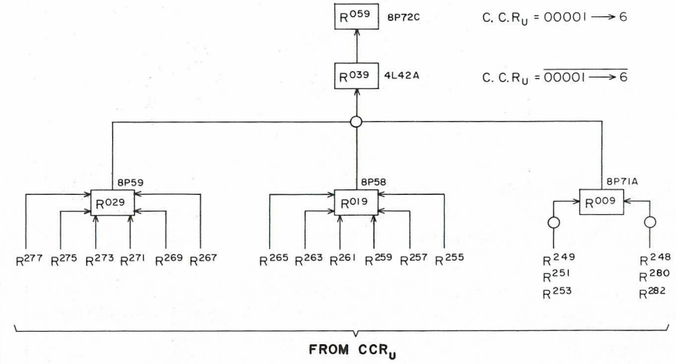

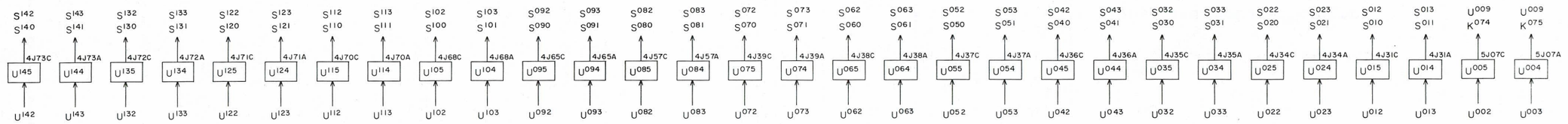

U2 ⟶ S

REV.	AUTH.	DATE	REG.	DRW.	CHG.	APPROVED
			REVISIONS			

APPROVED - , 5-4-62
CHECKED - D. W. S. 5-4-62
DRAWN - R. R. M. 4-3-62
DESIGNED - J. N. BENSON

REFERENCE DRAWINGS

COMPONENTS (UNLESS OTHERWISE INDICATED)

	TOLERANCE	VALUE	SIZE
RESISTORS			
CAPACITORS			

TITLE: U2, P1 AND CCRU TRANSLATORS

CONTROL DATA CORPORATION

PROJECT OR PRODUCT: 1604 - A

DRAWING NUMBER: XDP 214505 REV C

PAGE 44

TERM	LOCATION	PAGE	QUAD.	DEFINITION
J072	6O45A	60	0	$\overline{\text{Input Ready}}$ (Chnl. 1)
J073	6O45C	60	0	Input Ready (Chnl. 1)
J074	6O46A	60	0	$\overline{\text{Output Resume}}$ (Chnl. 2)
J075	6O46C	60	0	Output Resume (Chnl. 2)
J076	6O47A	60	2	$\overline{\text{Input Ready}}$ (Chnl. 3)
J077	6O47C	60	2	Input Ready (Chnl. 3)
J078	6P44A	60	2	$\overline{\text{Output Resume}}$ (Chnl. 4)
J079	6P44C	60	2	Output Resume (Chnl. 4)
J080	6P45A	60	1	$\overline{\text{Input Ready}}$ (Chnl. 5)
J081	6P45C	60	1	Input Ready (Chnl. 5)
J082	6P46A	60	1	$\overline{\text{Output Resume}}$ (Chnl. 6)
J083	6P46C	60	1	Output Resume (Chnl. 6)
K002	7P13B	17.0	2	$I^0 \rightarrow I^5 I^6$
K074	6P31A	42	2	Aux. Reference Register
K075	6P31C	42	2	
K076	6P32A	42	2	
K077	6P32C	42	2	
K078	6P33A	42	2	
K079	6P33C	42	2	
K152	4L57A	17.0	3	FF's Used for S^1, $S^2 \rightarrow$ ARD
K153	4L57C	17.0	3	
K154	4L56A	17.0	3	
K155	4L56C	17.0	3	
K216	4P42C	16		F ≠ 74.1 - 6
K622	3H01B	54.0	2	Storage Busy FF (Even)
K623	3J11B	54.0	2	
K662	4I76A	54.0	2	Storage Busy (Odd)
K663	4I76C	54.0	2	
N559	6P40	42	0	ARR → ARD
N901	4O38C			Odd Clock Slave
N941	4M74C			
N946	4P60B			Even Clock Slave
N953	4L43C			Odd Clock Slave
N960	6P66B			Even Clock Slave
N962	6P65B			
N964	6O66B			
N969	6P64B			Odd Clock Slave

TERM	LOCATION	PAGE	QUAD.	DEFINITION
R907	6M63	36	2	$CCR_U = CCR_L$
R908	6M64	36	2	$CCR_U \neq CCR_L$
V120	6N71	29	1	Resync. Pulses
V121	6N72	29	1	
V122	6N73	29	1	
V123	6N74	29	1	
V451	4N30C	17.1	0	Aux. Seq.
V455	6N66	17.1	0	
V456	6O48C	17.1	0	
V457	6N64	17.1	0	
V459	6N62	17.1	0	
V466	6O48A	17.1	0	
V485	6O83	17.0	1	S^1, S^2, → ARD (Aux. Seq.)
V171	4O03A	42	0	High Speed Storage Sequence
V181	4N034	42	1	
V441	4N21A	17.0	0	Auxiliary Sequence
V449	4N27C	17.1	0	
V453	4N35C	17.1	1	
V457	6N64	17.1	0	
V459	6N62	17.1		
W142	4K77	25	0	Internal M.C.
W152	6L60C	25	0	
W153	6L61A	25	0	
W155	6L60A	25	0	
W170	6N49	25	0	

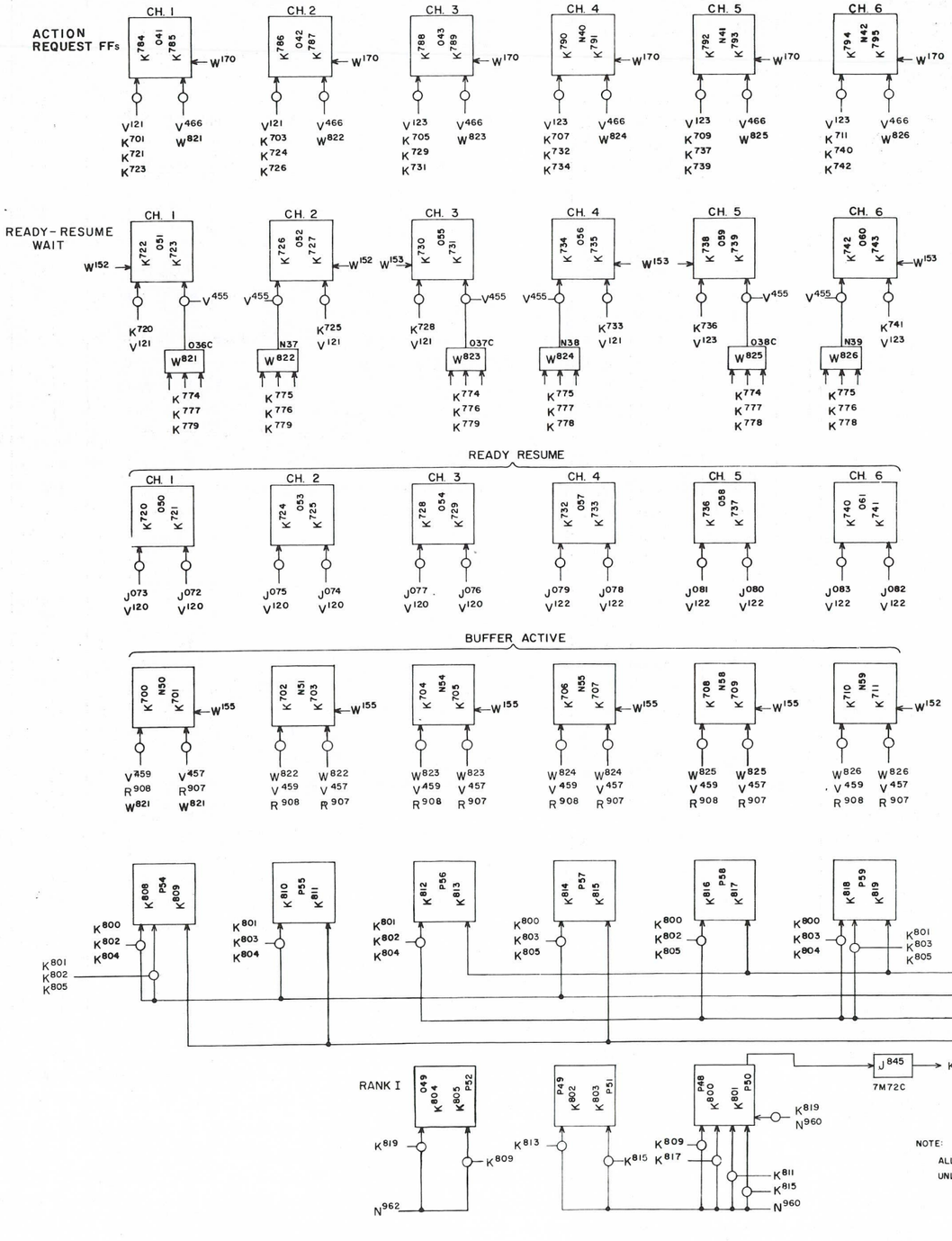

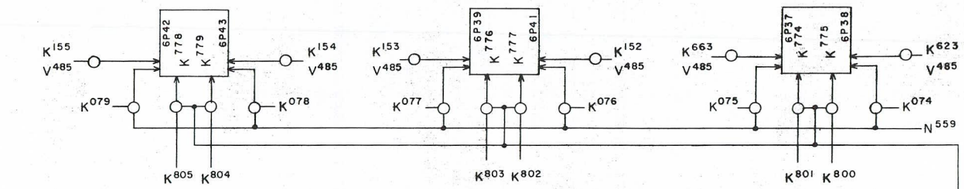

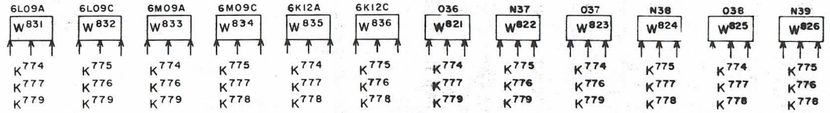

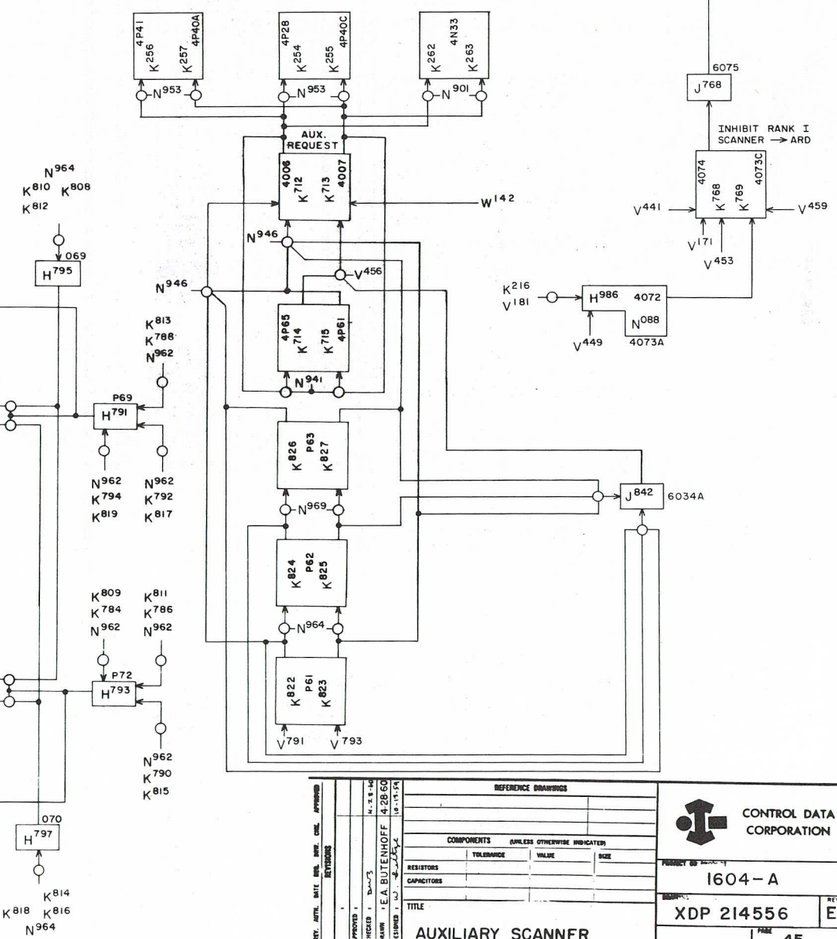

REFERENCE DRAWINGS

COMPONENTS (UNLESS OTHERWISE INDICATED)

	TOLERANCE	VALUE	SIZE
RESISTORS			
CAPACITORS			

TITLE

AUXILIARY SCANNER

CONTROL DATA CORPORATION

PROJECT OR MODEL 1604-A

DRAWING XDP 214556 REV E

PAGE 45

TERM	LOCATION	PAGE	QUAD.	DEFINITION
A503	1M43	48.0	2	Section 1 Borrow Input-Accumulator Borrow Pyramid
A997	3K54C	52	0	X = A
F404	3M20B	19.3	0	$\overline{04}$
F410	3M26C	19.3	0	$\overline{10}$
F443	4L69B	19.3	1	$\overline{43}$
F444	4L70A	19.3	1	$\overline{44}$
F515	3M81C	19.4	2	21 + 47
F517	3M80B	19.4	2	25 + 26 + 27
F518	3M79B	19.4	2	26 + 32
F519	4M25C	19.4	2	21
F520	3M78A	19.4	2	04
F522	4M11A	19.4	2	16 + 17 + 37
F525	3M76A	19.4	0	24 + 27
F526	3M77C	19.4	0	25 + 27 + 33
F540	3N81B	19.4	2	30 + 31
F541	3N08B	19.4	2	30 - 33
F543	4N01B	19.4	2	43
F555	3O82B	19.4	1	24 - 27
F560	3O80B	19.4	3	21
F561	3O79A	19.4	3	(24 + 25 + 27) (SR = 1)
F562	4N06A	19.4	3	41 + 43 + 71
F563	4N06C	19.4	3	72 + 73 + Adv. Clock
F565	3O79C	19.4	3	26 + 27
F566	4N07A	19.4	3	40 + 41
F567	4O27A	19.4	3	37
F587	3J55B	19.4	3	27 + 33
F613	3M77A	19.5	0	$\overline{24 - 27 + 30 - 33}$
F614	4K69A	19.5	0	37 + 43 - 46
F616	3K29C	19.5	0	32
F618	3K28A	19.5	0	04 + 10
F619	4K69C	19.5	0	12 + 13 + 16 + 17 + 37 + 44 + 72 + 73 + Adv. Clock
F620	3K28C	19.5	0	24 + 26 + 32
F653	3K24C	19.5	1	25
F672	4K64A	19.5	3	$\overline{12 + 13 + 16 + 17 + 37 + 40 - 42}$
F741	3P24B	19.6	2	30 - 33
F940	3P21B	19.6	3	30 + 31
H051	6L64	53	3	Overflow Sensing
J111	3N11C	52	1	$A^{36} \neq A^{37}$
J129	3N04A	52	3	Q Neg.
J137	3N08C	21	3	$R > 36_{10}$
J140	2D03B	25	0	Internal M. C.
J173	3N05B	52	3	A Neg.
K310	3L31A	51	0	$\overline{\text{A Right Shift}}$
K314	3L29B	51	2	$\overline{\text{A Left Shift}}$
K405	3N38C	14	2	$\overline{\text{Inhibit Add}}$
K471	3K75	7	2	f = 04
K473	3K77A	7	3	f = 04 + 10 + 11 FF
K475	3K08C	11	0	A (dividend) Neg.
K481	4K36	8.1	0	f = 16 + 17

TERM	LOCATION	PAGE	QUAD.	DEFINITION
K482	4K37C	8.1	2	f = 43 - 46 FF
K483	4K40C	8.1	2	
K484	4K39A	8.1	0	f = 52 + 53
K487	4P39	8.1	0	f = 37
K501	3K11B	11	2	AQ Sign Record FF = "1"
K502	3K12A	11	2	AQ Sign Record FF Slave
K507	3O13C	14	0	Execute Round FF
K511	3K14	13	1	U^2 Sign Record FF
N911	1P24C			Odd Clock Slave
N923	2P24C			Odd Clock Slave
U133	5L59B	18.1	2	U^{13} = "1"
U707	5O63	53	3	U^{11} - U^{14} Unequal
V004	4J04	5	3	RNI Seq.
V006	4J05	5	3	Execute Instruction
V011	3L78C	25	1	Internal M. C.
V201	3K58	7	0	ZA Seq.
V203	3K60	7	0	
V206	3K62	7	0	
V211	3K68	7	1	
V212	3K69A	7	3	
V213	3K70	7	3	
V304	4K22	8.0	0	RO Seq.
V305	4K23	8.0	0	
V306	4K24A	8.0	0	
V308	4K25A	8.0	0	
V309	4K26	8.0	1	
V311	4K27C	8.0	1	
V340	4K41	8.0	1	
V341	4K42	8.1	0	
V342	4K43	8.1	0	
V345	4K47	8.1	0	
V346	4K48	8.1	0	
V347	4K49B	8.1	0	
V348	4K51C	8.1	1	
V349	4K50A	8.1	1	
V352	4K52	8.1	1	
V353	4K53	8.1	1	
V401	3M56A	9	0	WO Seq.
V404	3M58	9	2	
V409	3M62	9	3	
V506	4M22C	10.0	0	S & T Seq.
V591	3O02C	13	2	Iterative Seq. (Ex. Floating Point)
V594	3O06	13	3	Iterative Seq. (Ex. Floating Point)
V597	6K59C	14	3	Iterative Seq. (Round, Norm., Final Ass'y.)
V599	6J70C	14	3	Iterative Seq. (Round, Norm., Final Ass'y.)
V603	3O21A	11	0	Iterative Seq. (Main)
V605	3O22	11	0	
V609	3O25	11	1	
V611	3O27	11	1	
V612	3O28A	11	1	

TERM	LOCATION	PAGE	QUAD.	DEFINITION
V613	3O29	11	1	Iterative Seq. (Main)
V614	3O28C	11	1	Iterative Seq. (Main)
V619	3L16C	14	0	Iterative Seq. (Round, Norm., Final Ass'y.)
V621	3O34	11	2	Iterative Seq. (Main)
V622	3O36A	11	2	Iterative Seq. (Main)
V633	3M38A	12	0	Iterative Seq. (Divide Step)
V634	3M39	12	0	Iterative Seq. (Multiply Step)
V644	3M51	12	3	Iterative Seq. (Divide Step)
V646	3M53	12	3	Iterative Seq. (Divide Step)
V648	3M52C	13	0	Iterative Seq. (Ex. Floating Point)
V650	3O54C	15	0	Iterative Seq. (End Sign Correction)
V651	3O41	15	0	
V652	3O42	15	0	
V653	3O43A	15	0	
V654	3O43C	15	0	
V655	3O44A	15	3	
V657	3O45A	15	1	
V661	3O52C	13	0	Iterative Seq. (Ex. Floating Point)
V662	3O53A	13	0	
V671	3O59C	13	0	
V672	3O61	13	0	
V673	3O62	13	2	
V676	3O71	14	0	Iterative Seq. (Round, Norm., Final Ass'y.)
V677	3O72	14	0	
V683	3O31C	14	0	
V688	3P47A	14	1	
V690	3P53A	14	1	
V693	3P57	14	2	
V695	3P62A	14	2	
V699	3P65C	14	2	
V886	3K48	51	3	Shift Control
V888	3J49	51	3	
V951	3L05C	13	2	Iterative Seq. (Ex. Floating Point)

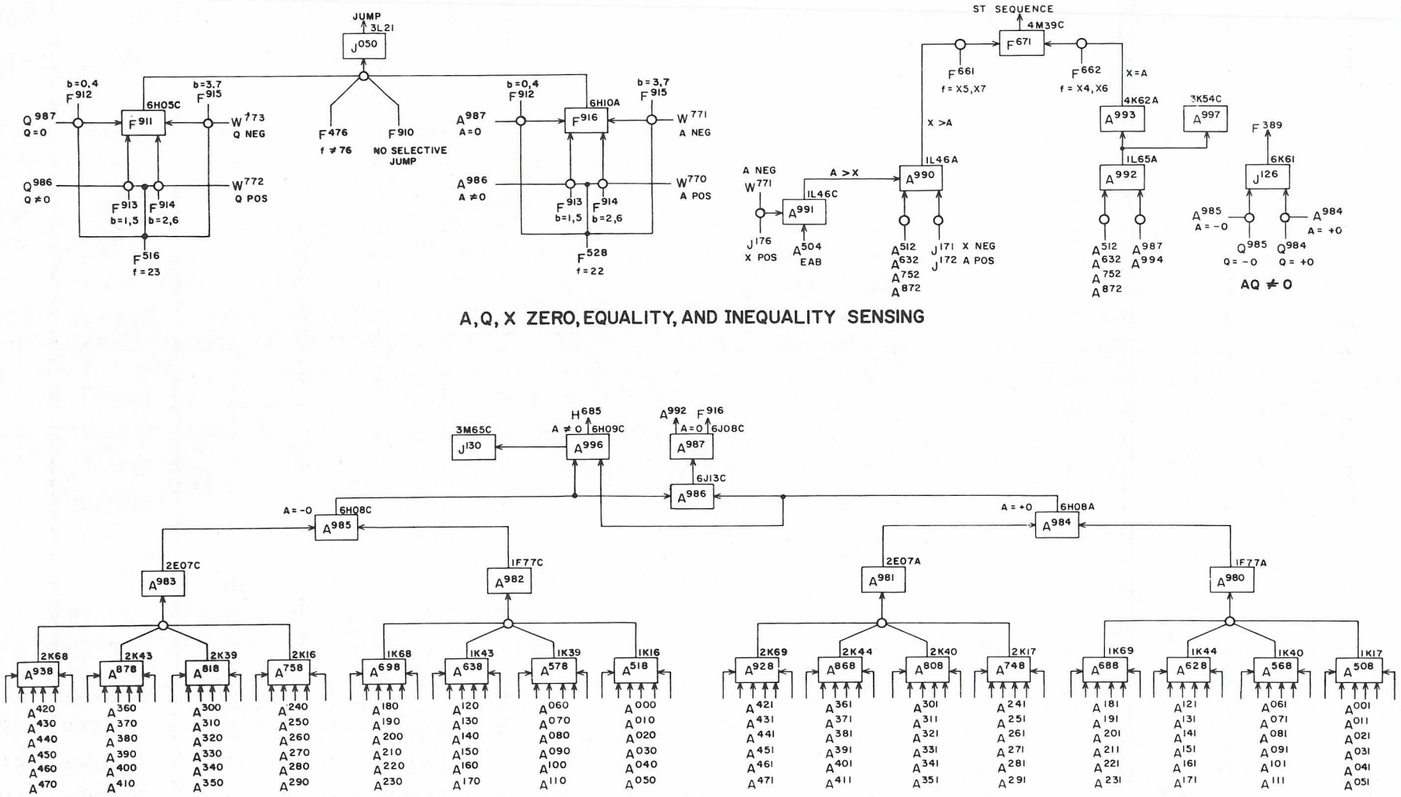

A,Q, X ZERO, EQUALITY, AND INEQUALITY SENSING

A = 0 PYRAMID

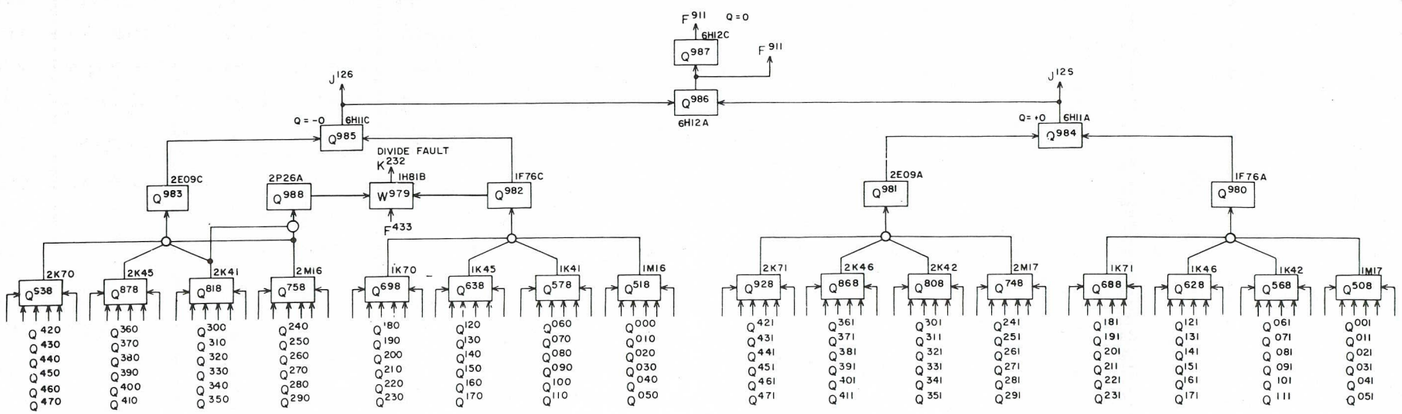

Q = 0 PYRAMID

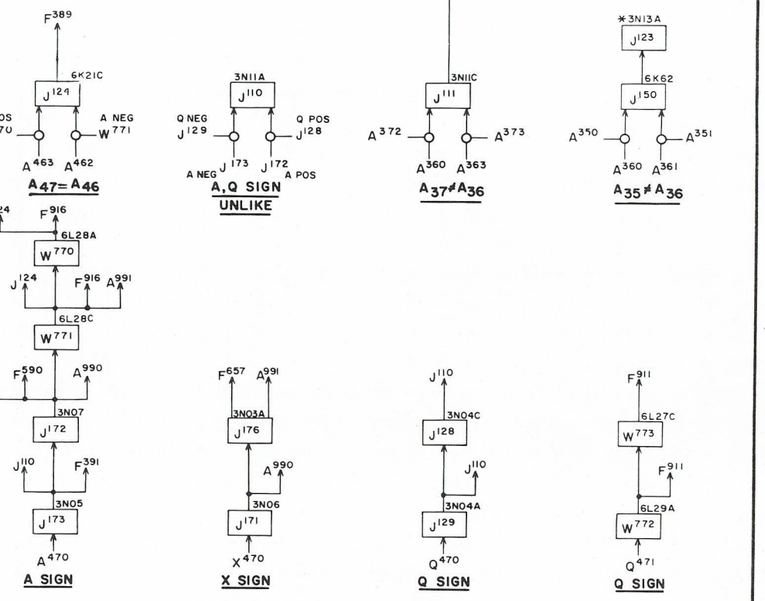

ARITHMETIC SENSING

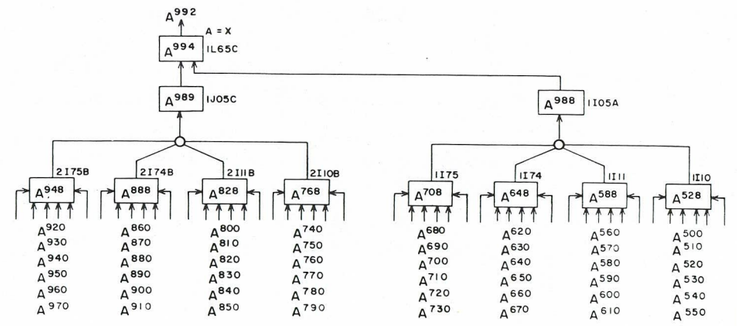

A = X PYRAMID

REV.	AUTH.	DATE	REVISIONS	ENG.	CHK.	APPROVED
-						

APPROVED -
CHECKED -
DRAWN - E.A. BUTENHOFF 3-12-60
DESIGNED - S. ASCHENBRENNER 1-12-60

REFERENCE DRAWINGS

CONTROL DATA CORPORATION

PROJECT OR PRODUCT: 1604-A

TITLE: LOGIC DIAGRAM ARITHMETIC SENSING NETWORKS

DRAWING NUMBER: XDP 214580 REV. A

PAGE 52

TERM	LOCATION	PAGE	QUAD.	DEFINITION
A970	2O79	48.3	2	$A^{47} \neq X^{47}$
F152	6N13A	19.1	0	F ≠ 2X
F300	6L01B	19.2	0	f = $\overline{01\text{-}07}$
F325	6L10C	19.2	0	$\overline{25 + 27}$
I241	4K54C	8.1	0	f = 00 + 77
I286	6J05C	33	1	$\overline{\text{Interrupt Lockout}}$
J068	6H83	33	2	Interrupt
J070	6J47A			Interrupt Lockout
J151	6O78	33		Internal Interrupt Req. Light
J499	6H04A	24.0	3	1604/1604A Switch in 1604-A Position
J504	6M70B			EXF Code = XXX(00x)X
J505	6M71B			EXF Code = XXX(01x)X
J506	6M72B			EXF Code = XXX(10x)X
J507	6M73B			EXF Code = XXX(11x)X
J508	6M83A	30	3	EXF Code = XXXX(xx0)
J509	6M83C	30	3	EXF Code = $\overline{\text{XXXX(xx0)}}$
J511	6M84	30	1	Select 001XX
J518	6K49C	30	3	Sense 0X1XX
J521	6J61C	30	3	Sense 001XX
J529	6L56C	30	1	Select 0X070 (Clear Arithmetic Faults)
J579	6L52A	30	1	Select 0X070 (Clear Arithmetic Faults)
J974	6M74B			EXF Code = XXX(xx0)X
J975	6M75B			EXF Code = XXX(xx1)X
J976	6M76A			EXF Code = XXX(xx0)X
J977	6M77B			EXF Code = XXX(xx1)X
K048	6K64A	30	2	
K520	3L07A	46	2	$\overline{\text{Partial Add In A}}$
N909	6L38B			Odd Clock Slave
N928	6O33C			Even Clock Slave
O030	8M09A	62	3	EXF Code = XXX(xx0)X
U424	6P20A	19	2	f = X(0XX)
U434	6P22A	19	2	f = X(X0X)

TERM	LOCATION	PAGE	QUAD.	DEFINITION
V209	3K64	7	3	ZA Seq.
V350	4K50C	8.1	1	RO Seq.
V415	6L66C	9	2	WO Seq.
V597	6K59C	14	3	Iterative Seq. (Round, Norm., Final Ass'y.)
V598	6J70A	14	3	
V650	3O54C	15	0	Iterative Seq. (End Sign Correction)
V652	3O42	15	1	
V820	3K33A	46	0	Add X^2 to A^1
W152	6L60C	25	3	Internal M. C.
W159	6L62	25	1	External M. C.
W167	6L75C	25	1	
W184	6O77	25	2	Internal M. C.
W773	6L27C	52	1	Q Neg.
W979	1H81B	52	2	Floating Point Divide Fault

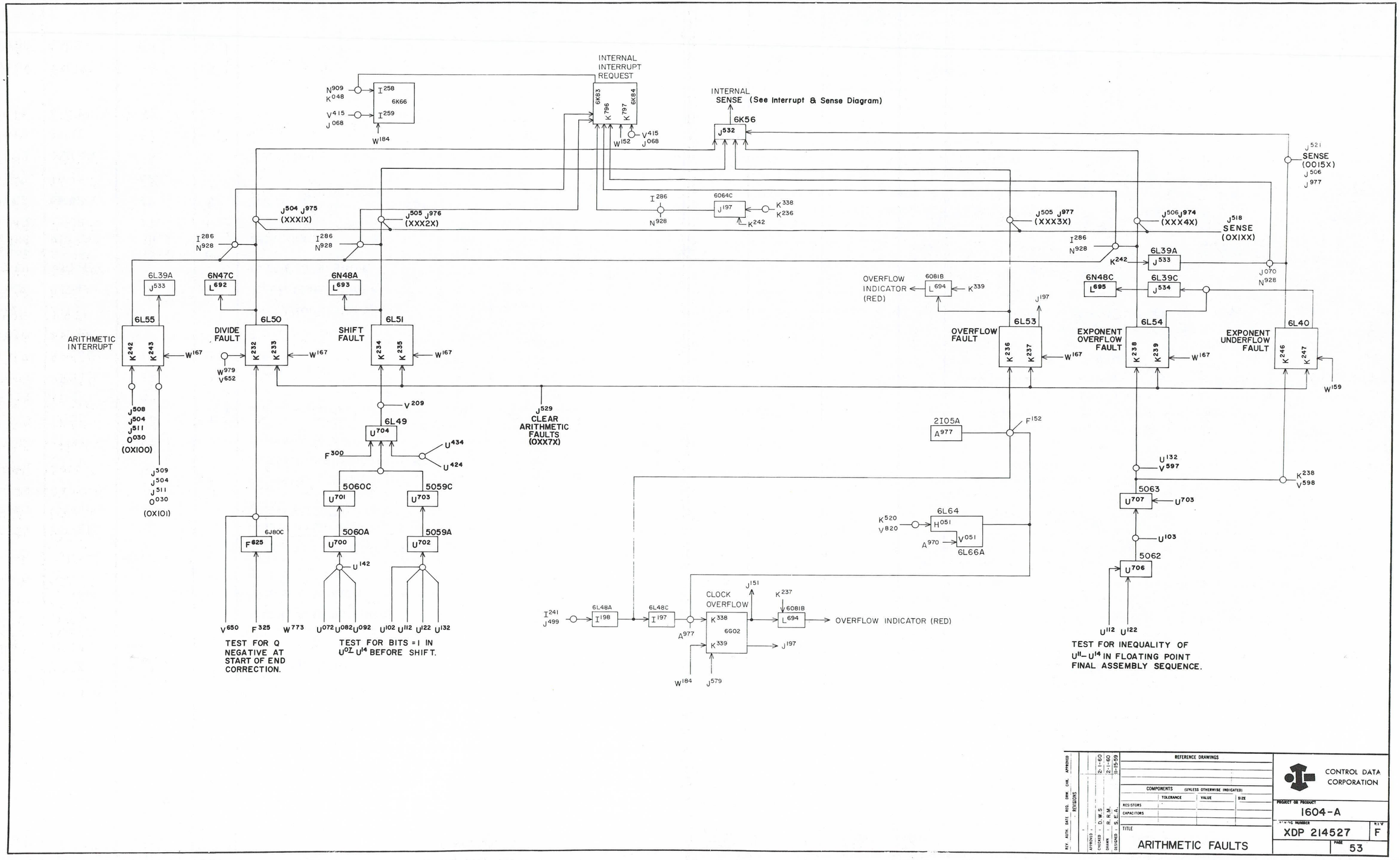
INTERNAL INTERRUPT REQUEST
INTERNAL SENSE (See Interrupt & Sense Diagram)
6K56
SENSE (0015X)
SENSE (0X1XX)
(XXX1X)
(XXX2X)
(XXX3X)
(XXX4X)
6L39A
6N47C
6N48A
6L55
6L50
6L51
6L53
6L54
6L40
6N48C
6L39C
ARITHMETIC INTERRUPT
DIVIDE FAULT
SHIFT FAULT
OVERFLOW FAULT
EXPONENT OVERFLOW FAULT
EXPONENT UNDERFLOW FAULT
OVERFLOW INDICATOR (RED)
6081B
6L49
5060C
5059C
5060A
5059A
6J80C
CLEAR ARITHMETIC FAULTS (0XX7X)
2I05A
6L64
6L66A
5063
5062
CLOCK OVERFLOW
6G02
6L48A
6L48C
OVERFLOW INDICATOR (RED)
TEST FOR Q NEGATIVE AT START OF END CORRECTION.
TEST FOR BITS = 1 IN U07 U14 BEFORE SHIFT.
TEST FOR INEQUALITY OF U11–U14 IN FLOATING POINT FINAL ASSEMBLY SEQUENCE.
REFERENCE DRAWINGS
COMPONENTS (UNLESS OTHERWISE INDICATED)
TOLERANCE
VALUE
SIZE
RESISTORS
CAPACITORS
TITLE
ARITHMETIC FAULTS
CONTROL DATA CORPORATION
PROJECT OR PRODUCT
1604-A
DRAWING NUMBER
XDP 214527
REV
F
PAGE
53

TERM	LOCATION	PAGE	QUAD.	DEFINITION
F717	4N39B	19.6	2	b = 1 - 6
H098	4K08A	5	3	RNI Seq.
H940	3I75	57	0	$\overline{\text{Initiate Storage}}$
H944	3I76	57	0	$\overline{\text{Initate Storage}}$
I770	4G77A	17.0	1	Auxiliary Sequence
I771	4I74A	17.0	1	
J007	2P33A	28	0	$\overline{\text{Test Mode}}$
J259	4H11A	17.0	2	Aux. Seq. Wait Storage
J844	4O37A	17.0	2	$I^0 \rightarrow I^5\ I^6$
J901	1P35	34	2	Digit Display Gate
K017	4P13B	42	0	Storage Enable
K217	4O42	16	0	F = 74.1 - 6
K253	4N17C	17.0	2	Aux. Seq. Wait Storage
K254	4P28B	45	1	$\overline{\text{Aux. Request}}$
K260	4O37C			$\overline{\text{Aux. Request}}$
K613	3J16C	57	1	Initiate Storage Reference
K615	3J17C	57	1	Initiate Storage Reference
K663	4I76C	54.1	2	Storage Busy (Odd)
K712	4O06	45	1	$\overline{\text{Aux. Request}}$
K714	4P65	45	3	
N560	8P61B	17.0	2	$CCR_U \rightarrow S^1$
N562	8P62B	17.0	2	
N936	3J03A			Even Clock Slave
N937	3J03C			Odd Clock Slave
N938	3J04A			Even Clock Slave
N939	3J04C			Odd Clock Slave
V432	3G76C	17.0	0	Aux. Seq.
V430	4I74A	17.0	0	
V440	4N09	17.0	0	
V462	4P42A	42	3	H. S. Storage Seq.
V487	4P43	42	0	
V703	4O12A	16	0	EXF Seq.
V910	3H11	57	0	Initiate Storage
V912	4J83	57	2	
W157	3J09C	25	3	Internal M. C.
W158	3J02	25	3	

TERM	LOCATION	PAGE	QUAD.	DEFINITION

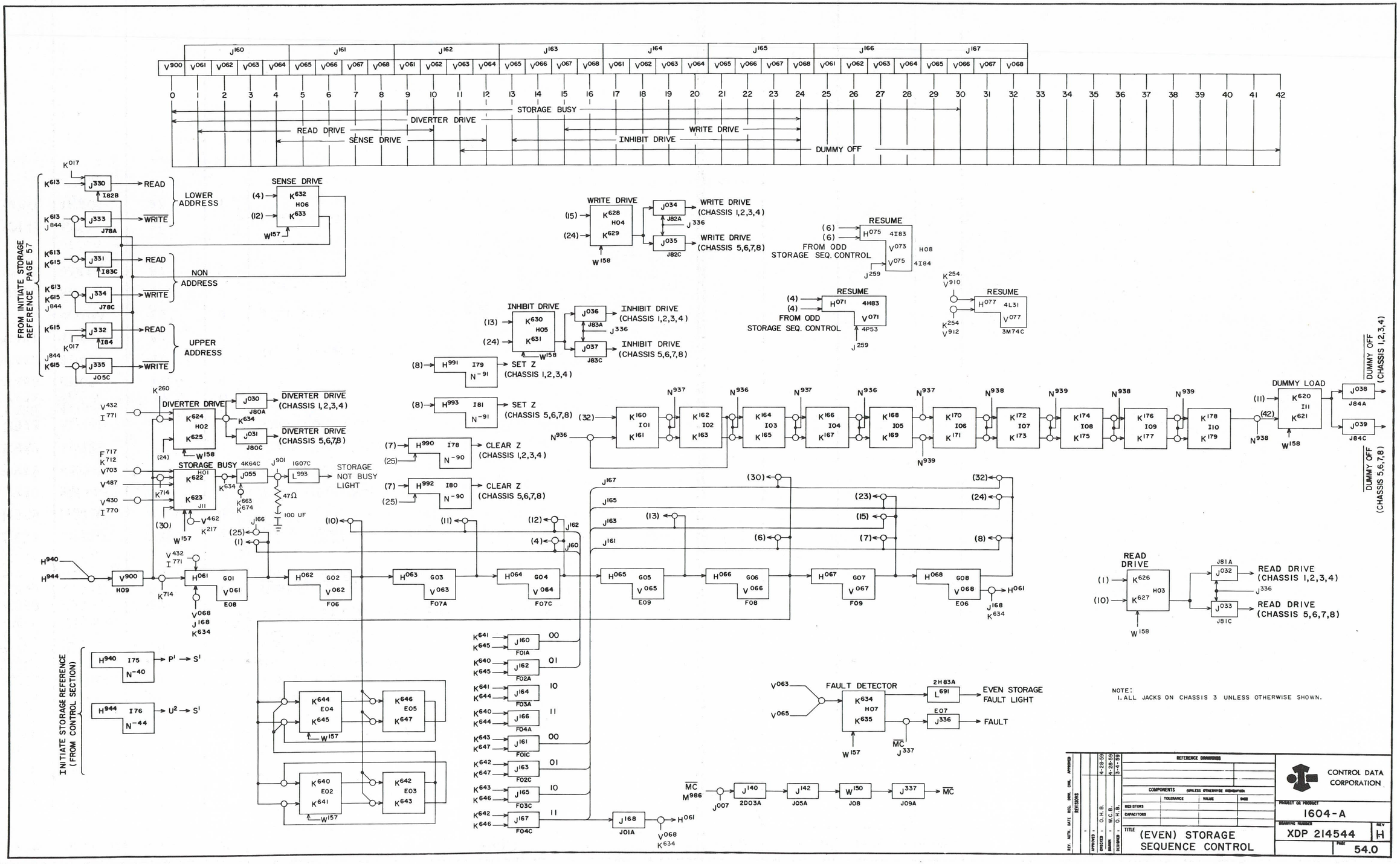

NOTE:
1. ALL JACKS ON CHASSIS 3 UNLESS OTHERWISE SHOWN.

REV.	AUTH.	DATE	REQ.	DRW.	CHK.	APPROVED

REVISIONS

APPROVED		
CHECKED	O.H.B.	4-28-59
DRAWN	W.C.B.	4-28-59
DESIGNED	O.H.B.	3-4-59

REFERENCE DRAWINGS

COMPONENTS (UNLESS OTHERWISE SPECIFIED)

	TOLERANCE	VALUE	SIZE
RESISTORS			
CAPACITORS			

TITLE (EVEN) STORAGE SEQUENCE CONTROL

CONTROL DATA CORPORATION

PROJECT OR PRODUCT 1604-A

DRAWING NUMBER XDP 214544 REV H

PAGE 54.0

TERM	LOCATION	PAGE	QUAD.	DEFINITION
F717	4N39B	19.6	2	b = 1 - 6
I770	4G77A	17.0	1	Auxiliary Sequence
I771	3K27A	17.0	1	
J007	2P33A	28	0	Test Mode
J259	4H11A	17.0	2	Aux. Seq. Wait Storage
J846	3N76C	17.0	2	$I^0 \rightarrow I^5\ I^6$
J901	1P35	34	2	Digit Display Gate
K017	4P13B	42	0	Storage Enable FF
K253	4N17C	17.0	2	Aux. Seq. Wait Storage
K217	4O42	16	2	F = 74.1 - 6
K254	4P28	45	1	Aux. Request
K617	4J25C	57	3	Initiate Storage Reference
K619	4J76C	57	3	
K623	3J11B	54.0	2	Storage Busy
K712	4O06	45	1	Aux. Request
N554	8P63C	17.0	0	$CCR_U \rightarrow S^2$
N556	6O34C	17.0	0	
N940	4M74A			Even Clock Slave
N941	4M74C			Odd Clock Slave
N942	4L73B			Even Clock Slave
N943	4L74B			Odd Clock Slave
V430	4I74A	17.0	0	Aux. Seq.
V432	3G76C	17.0	0	
V440	4N09	17.0	0	
V462	4P42A	42	3	H. S. Storage Seq.
V487	4P43	42	0	
V703	4O12A	16	0	EXF Seq.
V910	3H11	57	0	Initiate Storage
V912	4J83	57	2	
W143	4J82	25	0	Internal M. C.
W146	4K80	25	1	

TERM	LOCATION	PAGE	QUAD.	DEFINITION

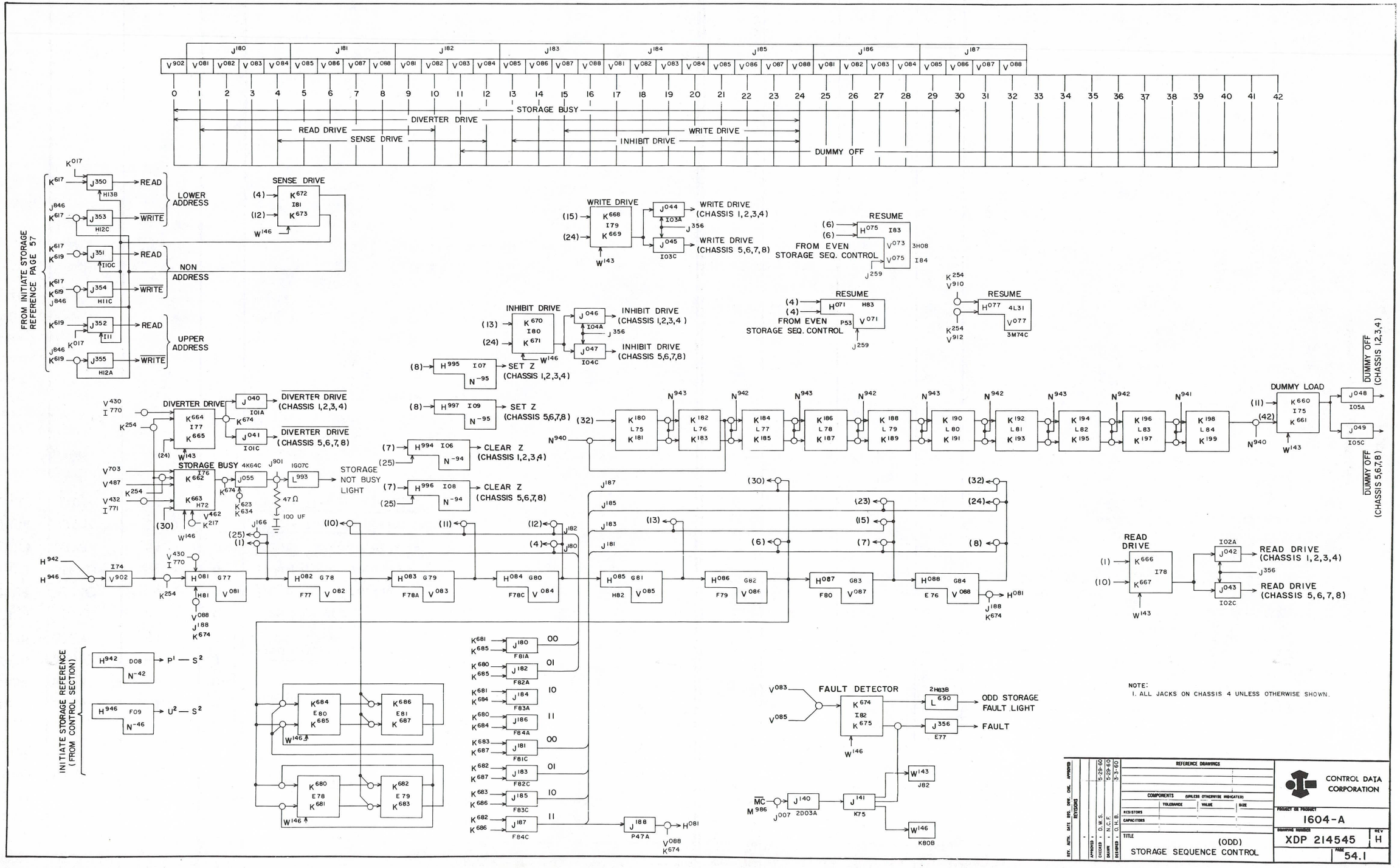

NOTE:
1. ALL JACKS ON CHASSIS 4 UNLESS OTHERWISE SHOWN.

REV.	AUTH.	DATE	REQ.	DRW.	CHK.	APPROVED
REVISIONS						
APPROVED						
CHECKED	D.W.S.	5-29-60				
DRAWN	N.C.F.	5-29-60				
DESIGNED	O.H.B.	3-3-60				

REFERENCE DRAWINGS

COMPONENTS (UNLESS OTHERWISE INDICATED)

	TOLERANCE	VALUE	SIZE
RESISTORS			
CAPACITORS			

TITLE (ODD) STORAGE SEQUENCE CONTROL

CONTROL DATA CORPORATION

PROJECT OR PRODUCT 1604-A

DRAWING NUMBER XDP 214545 REV H

PAGE 54.1

TERM	LOCATION	PAGE	QUAD.	DEFINITION
H990	3I78	54.0	2	$\overline{\text{Clear Z}}$
H991	3I79	54.0	0	$\overline{\text{Set Z}}$
H992	3I80	54.0	2	$\overline{\text{Clear Z}}$
H993	3I81	54.0	2	$\overline{\text{Set Z}}$
J036	3J83A	54.0	0	Inhibit Drive
J037	3J83C	54.0	0	Inhibit Drive
J038	3J84A	54.0	3	$\overline{\text{Dummy Off}}$
J039	3J84C	54.0	3	$\overline{\text{Dummy Off}}$
J330	3I82B	54.0	0	Read Lower Address
J331	3I83C	54.0	0	Read Non-Address
J332	3I84B	54.0	0	Read Upper Address
J333	3J78A	54.0	0	$\overline{\text{Write Lower Address}}$
J334	3J78C	54.0	0	$\overline{\text{Write Non-Address}}$
J335	3J05C	54.0	0	$\overline{\text{Write Upper Address}}$

TERM	LOCATION	PAGE	QUAD.	DEFINITION

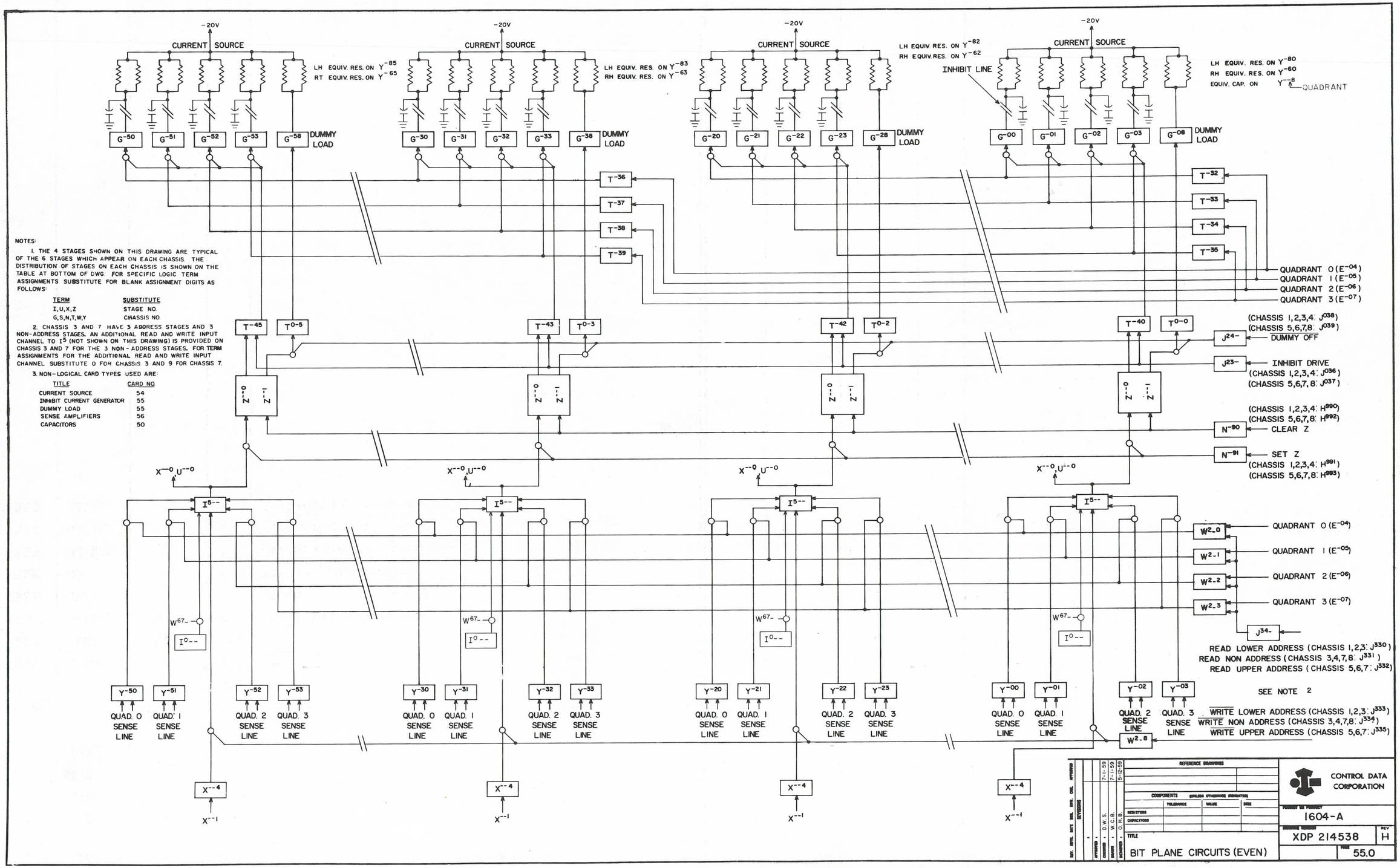

NOTES:

1. THE 4 STAGES SHOWN ON THIS DRAWING ARE TYPICAL OF THE 6 STAGES WHICH APPEAR ON EACH CHASSIS. THE DISTRIBUTION OF STAGES ON EACH CHASSIS IS SHOWN ON THE TABLE AT BOTTOM OF DWG. FOR SPECIFIC LOGIC TERM ASSIGNMENTS SUBSTITUTE FOR BLANK ASSIGNMENT DIGITS AS FOLLOWS:

TERM	SUBSTITUTE
I,U,X,Z	STAGE NO.
G,S,N,T,W,Y	CHASSIS NO.

2. CHASSIS 3 AND 7 HAVE 3 ADDRESS STAGES AND 3 NON-ADDRESS STAGES. AN ADDITIONAL READ AND WRITE INPUT CHANNEL TO I^5 (NOT SHOWN ON THIS DRAWING) IS PROVIDED ON CHASSIS 3 AND 7 FOR THE 3 NON-ADDRESS STAGES. FOR TERM ASSIGNMENTS FOR THE ADDITIONAL READ AND WRITE INPUT CHANNEL SUBSTITUTE 0 FOR CHASSIS 3 AND 9 FOR CHASSIS 7.

3. NON-LOGICAL CARD TYPES USED ARE:

TITLE	CARD NO.
CURRENT SOURCE	54
INHIBIT CURRENT GENERATOR	55
DUMMY LOAD	55
SENSE AMPLIFIERS	56
CAPACITORS	50

REFERENCE DRAWINGS

COMPONENTS (UNLESS OTHERWISE INDICATED)

	TOLERANCE	VALUE	SIZE
RESISTORS			
CAPACITORS			

TITLE: BIT PLANE CIRCUITS (EVEN)

CONTROL DATA CORPORATION

PROJECT OR PRODUCT: 1604-A

DRAWING NUMBER: XDP 214538 REV H

PAGE 55.0

TERM	LOCATION	PAGE	QUAD.	DEFINITION
H994	4I06	54.1	2	$\overline{\text{Clear Z}}$
H995	4I07	54.1	0	$\overline{\text{Set Z}}$
H996	4I08	54.1	2	$\overline{\text{Clear Z}}$
H997	4I09	54.1	2	$\overline{\text{Set Z}}$
J046	4I04A	54.1	0	Inhibit Drive
J047	4I04C	54.1	0	
J048	4I05A	54.1	1	$\overline{\text{Dummy Off}}$
J049	4I05C	54.1	1	
J350	4H13B	54.1	0	Read Lower Address
J351	4I10C	54.1	0	Read Non-Address
J352	4I11	54.1	0	Read Upper Address
J353	4H12C	54.1	0	$\overline{\text{Write Lower Address}}$
J354	4H11C	54.1	0	$\overline{\text{Write Non-Address}}$
J355	4H12A	54.1	0	$\overline{\text{Write Upper Address}}$

TERM	LOCATION	PAGE	QUAD.	DEFINITION

NOTES:

1. THE 4 STAGES SHOWN ON THIS DRAWING ARE TYPICAL OF THE 6 STAGES WHICH APPEAR ON EACH CHASSIS. THE DISTRIBUTION OF STAGES ON EACH CHASSIS IS SHOWN ON THE TABLE AT BOTTOM OF DWG. FOR SPECIFIC LOGIC TERM ASSIGNMENTS SUBSTITUTE FOR BLANK ASSIGNMENT DIGITS AS FOLLOWS:

TERM	SUBSTITUTE
I, U, X, Z	STAGE NO.
G, S, N, T, W, Y	CHASSIS NO.

2. CHASSIS 3 AND 7 HAVE 3 ADDRESS STAGES AND 3 NON-ADDRESS STAGES. AN ADDITIONAL READ AND WRITE INPUT CHANNEL TO I^{6} (NOT SHOWN ON THIS DRAWING) IS PROVIDED ON CHASSIS 3 AND 7 FOR THE 3 NON-ADDRESS STAGES. FOR TERM ASSIGNMENTS FOR THE ADDITIONAL READ AND WRITE INPUT CHANNEL SUBSTITUTE 0 FOR CHASSIS 3 AND 9 FOR CHASSIS 7.

3. NON-LOGICAL CARD TYPES USED ARE:

TITLE	CARD NO.
CURRENT SOURCE	54
INHIBIT CURRENT GENERATOR	55
DUMMY LOAD	55
SENSE AMPLIFIERS	56
CAPACITORS	50

-20V CURRENT SOURCE

LH EQUIV. RES. ON Y^{-95}
RH EQUIV. RES. ON Y^{-75}

G^{-54} G^{-55} G^{-56} G^{-57} G^{-59} DUMMY LOAD

-20V CURRENT SOURCE

LH EQUIV. RES. ON Y^{-93}
RH EQUIV. RES. ON Y^{-73}

G^{-34} G^{-35} G^{-36} G^{-37} G^{-39} DUMMY LOAD

-20V CURRENT SOURCE

LH EQUIV. RES. ON Y^{-92}
RH EQUIV. RES. ON Y^{-72}

G^{-24} G^{-25} G^{-26} G^{-27} G^{-29} DUMMY LOAD

-20V CURRENT SOURCE

INHIBIT LINE

LH EQUIV. RES. ON Y^{-90}
RH EQUIV. RES. ON Y^{-70}
EQUIV. CAP. ON Y^{-8} — QUADRANT

G^{-04} G^{-05} G^{-06} G^{-07} G^{-09} DUMMY LOAD

T^{-86} T^{-87} T^{-88} T^{-89}

T^{-82} T^{-83} T^{-84} T^{-85}

QUADRANT 0 (E^{-54})
QUADRANT 1 (E^{-55})
QUADRANT 2 (E^{-56})
QUADRANT 3 (E^{-57})

T^{-95} T^{9-5} T^{-93} T^{9-3} T^{-92} T^{9-2} T^{-90} T^{9-0}

(CHASSIS 1,2,3,4 J^{048})
(CHASSIS 5,6,7,8 J^{049})
J^{29-} ← DUMMY OFF

J^{28-} ← INHIBIT DRIVE
(CHASSIS 1 2 3 4 J^{046})
(CHASSIS 5,6,7,8 J^{047})

Z^{--2} Z^{--3}

(CHASSIS 1,2,3 4, H^{994})
(CHASSIS 5,6,7,8 H^{996})
N^{-94} ← CLEAR Z

N^{-95} ← SET Z
(CHASSIS 1,2,3,4 H^{995})
(CHASSIS 5,6,7,8 H^{997})

X^{--0} U^{--0}

I^{6--}

W^{68-} I^{0--}

W^{2-4} ← QUADRANT 0 (E^{-54})
W^{2-5} ← QUADRANT 1 (E^{-55})
W^{2-6} ← QUADRANT 2 (E^{-56})
W^{2-7} ← QUADRANT 3 (E^{-57})

J^{36-} ←
READ LOWER ADDRESS (CHASSIS 1,2,3 J^{350})
READ NON ADDRESS (CHASSIS 3,4,7,8 J^{351})
READ UPPER ADDRESS (CHASSIS 5,6,7 J^{352})

SEE NOTE 3

Y^{-54} QUAD. 0 SENSE LINE
Y^{-55} QUAD. 1 SENSE LINE
Y^{-56} QUAD. 2 SENSE LINE
Y^{-57} QUAD. 3 SENSE LINE

Y^{-34} QUAD. 0 SENSE LINE
Y^{-35} QUAD. 1 SENSE LINE
Y^{-36} QUAD. 2 SENSE LINE
Y^{-37} QUAD. 3 SENSE LINE

Y^{-24} QUAD. 0 SENSE LINE
Y^{-25} QUAD. 1 SENSE LINE
Y^{-26} QUAD. 2 SENSE LINE
Y^{-27} QUAD. 3 SENSE LINE

Y^{-04} QUAD. 0 SENSE LINE
Y^{-05} QUAD. 1 SENSE LINE
Y^{-06} QUAD. 2 SENSE LINE
Y^{-07} QUAD. 3 SENSE LINE

$\overline{\text{WRITE}}$ LOWER ADDRESS CHASSIS 1,2,3 J^{353})
$\overline{\text{WRITE}}$ NON ADDRESS (CHASSIS 3 4 7 8 J^{354})
$\overline{\text{WRITE}}$ UPPER ADDRESS (CHASSIS 5,6,7 J^{355})

W^{2-9}

X^{--4} X^{--1}

REV.	INITIAL	DATE	ENGR. APPROVAL	CHKR. APPROVAL
REVISIONS				
APPROVED				7-2-59
CHECKED	D. W. S.			7-2-59
DRAWN	W. C. B.			5-12-59
DESIGNED	O. H. BERG			

REFERENCE DRAWINGS

COMPONENTS (UNLESS OTHERWISE INDICATED)

	TOLERANCE	VALUE	SIZE
RESISTORS			
CAPACITORS			

TITLE

BIT PLANE CIRCUITS (ODD)

CONTROL DATA CORPORATION

PRODUCT OR PROJECT: 1604-A

DRAWING NUMBER: XDP 214540 REV. H

PAGE 55.1

TERM	LOCATION	PAGE	QUAD.	DEFINITION
J030	3J80A	54.0	2	Diverter Drive
J031	3J80C	54.0	2	
J032	3J81A	54.0	1	Read Drive
J033	3J81C	54.0	1	
J034	3J82A	54.0	0	Write Drive
J035	3J82C	54.0	0	
N553	3D76	17.0	0	Set S^1 to all "1"s
N555	3E76	17.0	0	
N557	3G76	17.0	0	

TERM	LOCATION	PAGE	QUAD.	DEFINITION

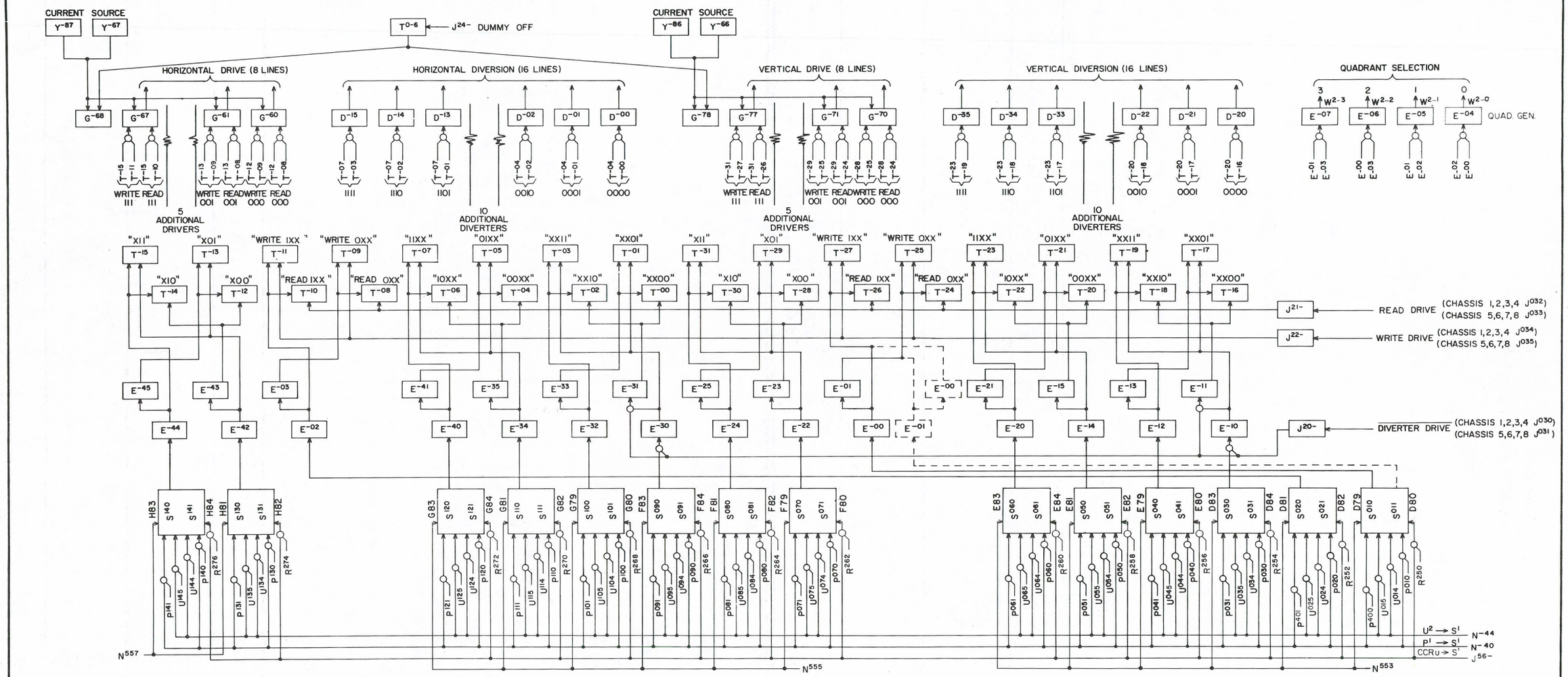

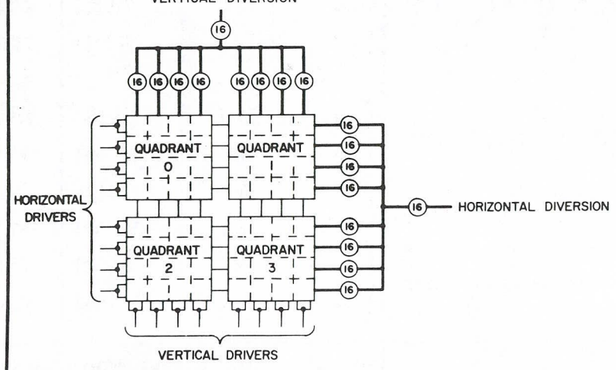

NOTE:

1. THE BASE LETTERS OF THE SYMBOL DESIGNATIONS IDENTIFY THE CARD TYPES, AS FOLLOWS:
   - D: DIVERTER (CARD TYPE 52)
   - E: INVERTER (CARD TYPE 21)
   - G: DRIVE GENERATOR (CARD TYPE 51); DUMMY LOAD (CARD TYPE 55)
   - J: INVERTER (CARD TYPE 11 OR 21)
   - T: SELECTOR (CARD TYPE 53)
   - Y: CURRENT SOURCE (CARD TYPE 54)
2. THE D,E,G,J,T AND Y TERMS ARE DUPLICATED ON ALL EIGHT CHASSIS. THE FIRST SUPERSCRIPT DIGIT OF THE D,E,G,T AND Y TERMS AND THE LAST DIGIT OF THE J TERMS, IS IDENTICAL TO THE NUMBER OF THE CHASSIS IN WHICH THE CARD IS LOCATED.
3. IN ORDER TO BALANCE THE LOADING OF THE S REGISTER FLIP-FLOPS, THE E TERMS OF CHASSIS 1,2,3 AND 4 ARE CONNECTED TO THE "0" OUTPUTS OF THOSE FLIP-FLOPS AND THE E TERMS OF CHASSIS 5, 6,7 AND 8 TO THE "1" OUTPUTS. THIS DRAWING SHOWS THE CONNECTIONS AS THEY ARE MADE TO THE "1" OUTPUTS. THE CONNECTIONS TO "0" OUTPUTS ARE MADE AS INDICATED FOR A TYPICAL STAGE BY THE DOTTED LINES.

ALL JACKS ON CHASSIS 3
UNLESS OTHERWISE SHOWN

REV.	AUTH.	DATE	REQ.	DRW.	CHK.	APPROVED
REVISIONS						
APPROVED						
CHECKED	D.W.S.	6-20-60				
DRAWN	G.J.H.	6-20-60				
DESIGNED	O.H.B.	4-21-60				

REFERENCE DRAWINGS

COMPONENTS (UNLESS OTHERWISE INDICATED)

	TOLERANCE	VALUE	SIZE
RESISTORS			
CAPACITORS			

TITLE: ADDRESS SELECTION (EVEN STORAGE)

CONTROL DATA CORPORATION

PROJECT OR PRODUCT: 1604-A

DRAWING NUMBER: XDP 214541 REV: B

PAGE: 56.0

TERM	LOCATION	PAGE	QUAD.	DEFINITION
J040	4I01A	54.1	2	Diverter Drive
J041	4I01C	54.1	2	
J042	4I02A	54.1	1	Read Drive
J043	4I02C	54.1	1	
J044	4I03A	54.1	0	Write Drive
J045	4I03C	54.1	0	
N651	4N48	17.0	0	Set S^2 to all "1"s
N653	4N49	17.0	0	
N655	4N50	17.0	0	

TERM	LOCATION	PAGE	QUAD.	DEFINITION

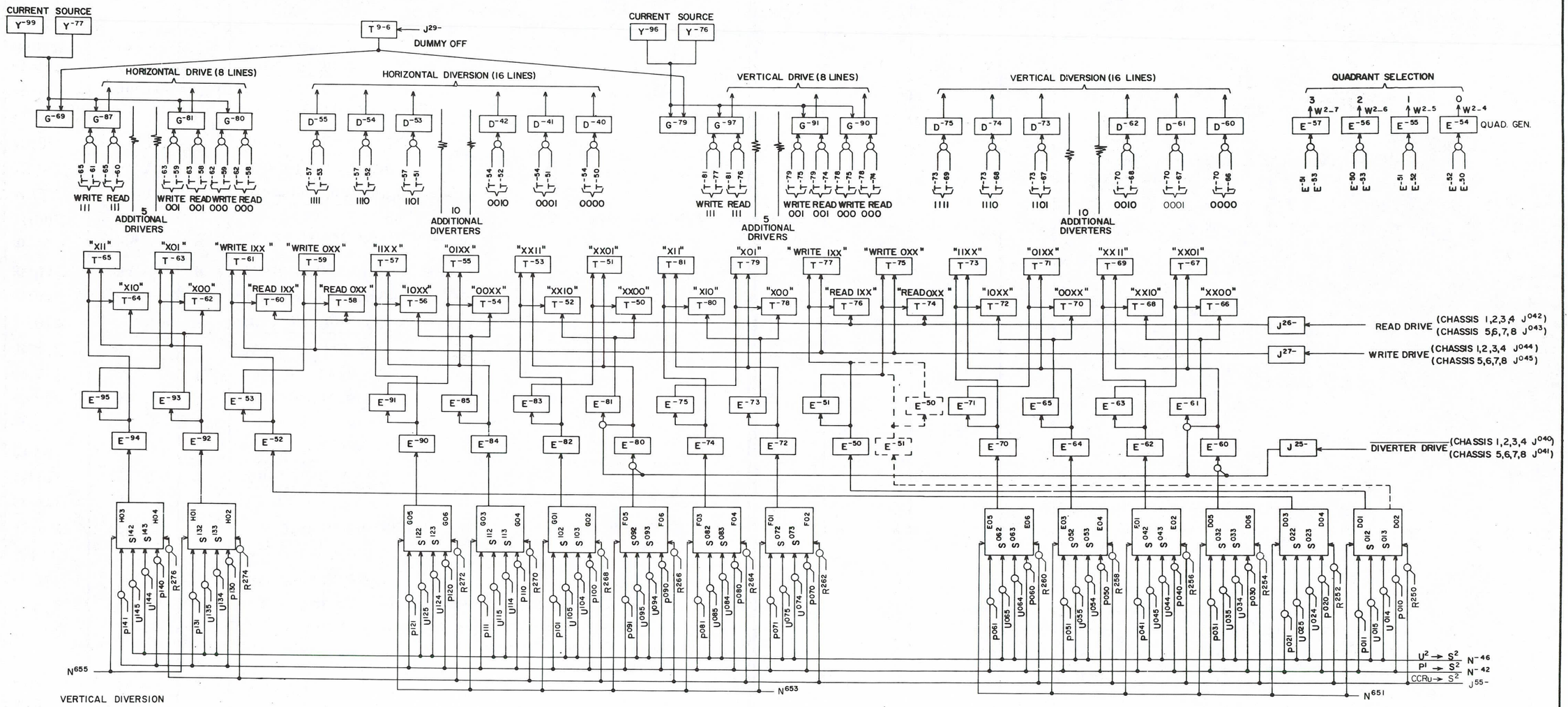

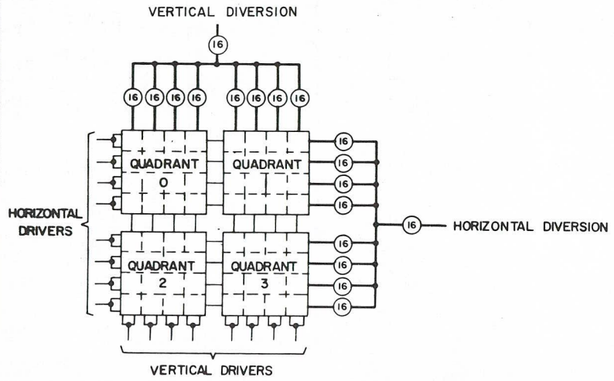

NOTE:
1. THE BASE LETTERS OF THE SYMBOL DESIGNATIONS IDENTIFY THE CARD TYPES, AS FOLLOWS:
D: DIVERTER (CARD TYPE 52)
E: INVERTER (CARD TYPE 21)
G: DRIVE GENERATOR (CARD TYPE 51), DUMMY LOAD (CARD TYPE 55)
J: INVERTER (CARD TYPE 11 OR 21)
T: SELECTOR (CARD TYPE 53)
Y: CURRENT SOURCE (CARD TYPE 54)
2. THE D,E,G,J,T AND Y TERMS ARE DUPLICATED ON ALL EIGHT CHASSIS. THE FIRST SUPERSCRIPT DIGIT OF THE D,E,G,T AND Y TERMS AND THE LAST DIGIT OF THE J TERMS, IS IDENTICAL TO THE NUMBER OF THE CHASSIS IN WHICH THE CARD IS LOCATED.
3. IN ORDER TO BALANCE THE LOADING OF THE S REGISTER FLIP-FLOPS, THE E TERMS OF CHASSIS 1,2,3 AND 4 ARE CONNECTED TO THE "0" OUTPUTS OF THOSE FLIP-FLOPS AND THE E TERMS OF CHASSIS 5, 6,7 AND 8 TO THE "1" OUTPUTS. THIS DRAWING SHOWS THE CONNECTIONS AS THEY ARE MADE TO THE "1" OUTPUTS. THE CONNECTIONS TO "0" OUTPUTS ARE MADE AS INDICATED FOR A TYPICAL STAGE BY THE DOTTED LINES.

NOTE:
ALL JACKS ON CHASSIS 4
UNLESS OTHERWISE SHOWN

REV. APPR. DATE SIGL. DEPT. CHG. APPROVED
REVISIONS
APPROVED - 7-5-60
CHECKED - D.W.S 7-4-60
DRAWN - G.A.V. 6-17-60
DESIGNED - O.H. BERG

REFERENCE DRAWINGS
COMPONENTS (UNLESS OTHERWISE INDICATED)
TOLERANCE VALUE DATE
RESISTORS
CAPACITORS

CONTROL DATA CORPORATION
PROJECT OR PRODUCT 1604-A
DRAWING NUMBER XDP 214542 REV A
PAGE 56.1

TITLE
ADDRESS SELECTION
(ODD STORAGE)

TERM	LOCATION	PAGE	QUAD.	DEFINITION
F577	4J64A	19.4	1	20 + 21 + 47
F578	3J32A	19.4	1	57 + 61
F579	4J32C	19.4	1	$\overline{57 + 61}$
F581	4K70C	19.4	1	62
F853	4J74A	19.6	1	56 + 57
J066	4N54B	33	2	Interrupt
J138	4M43C	17.0	2	$\overline{\text{Aux. Seq. Wait Storage}}$
J844	4O37A	17.0	2	$\overline{I^0 \rightarrow I^5 I^6}$
J846	3N76C	17.0	2	
K002	7P13B	17.0	2	$\overline{I^0 \rightarrow I^5 I^6}$
K017	4P13B	42	0	H. S. Storage Seq. (Storage Enable FF)
K205	4K31B	8.1	3	RO Wait Storage 2
K207	3M68B	9	3	Write Operand Wait Storage
K211	4M41C	10.0	3	S & T Wait Storage
K217	4D42B	16	0	f = 74.1 - 6 FF
K252	4N17A	17.0	2	$\overline{\text{Aux. Seq. Wait Storage}}$
K254	4P28	45	1	$\overline{\text{Aux. Request}}$
K260	4O37C			$\overline{\text{Aux. Request}}$
K262	4N33A	45	1	$\overline{\text{Aux. Request}}$
K605	4N41C	42	1	Write Lower FF
K607	4N42C	42	1	Write Upper FF
K622	3H01B	54.0	2	$\overline{\text{Storage Busy}}$ (Even)
K627	3H03C	54.0	1	Read Drive (Even)
K631	3H05C	54.0	0	Inhibit Drive (Even)
K632	3H06A	54.0	0	Sense Drive FF (Even)
K633	3H06C	54.0	0	
K662	4I76A	54.1	2	$\overline{\text{Storage Busy}}$ (Odd)
K667	4I78C	54.1	1	Read Drive (Odd)
K671	4I80C	54.1	0	Inhibit Drive (Odd)
K672	4I81A	54.1	0	Sense Drive FF (Odd)
K673	4I81C	54.1	0	
K714	4P65B	45	3	$\overline{\text{Aux. Request}}$
K713	4O07B	45	3	Aux. Request
N935	3O49C			Odd Clock Slave
N945	4J77C			

TERM	LOCATION	PAGE	QUAD.	DEFINITION
V000	4J02	5	1	Execute Instruction
V090	4K05A	5	0	RNI Seq.
V404	3M58B	9	0	WO Seq.
W144	4K78B	25	1	Internal M. C.
W145	4K79B	25	1	
W150	3J08B	25	1	
W156	5K39	25	2	

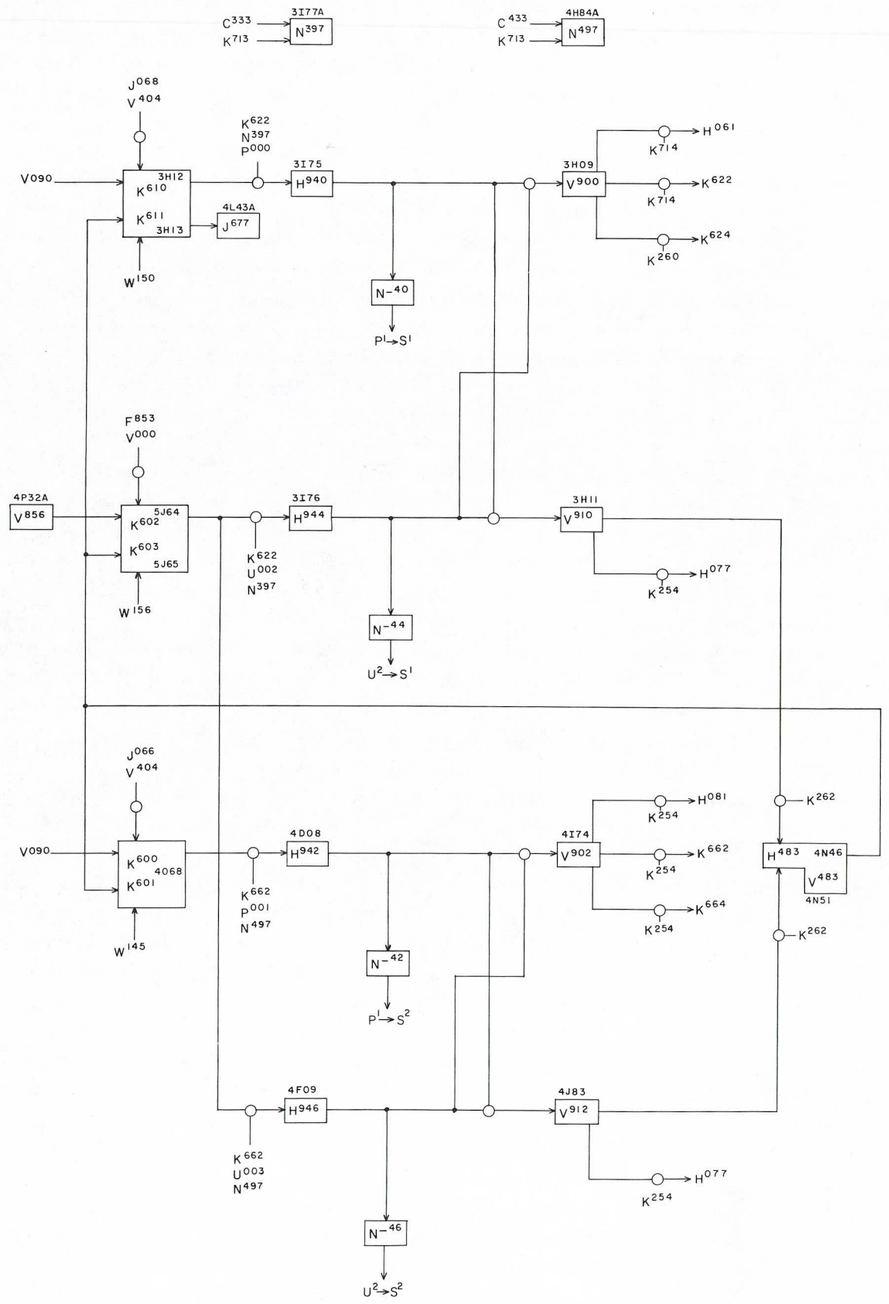

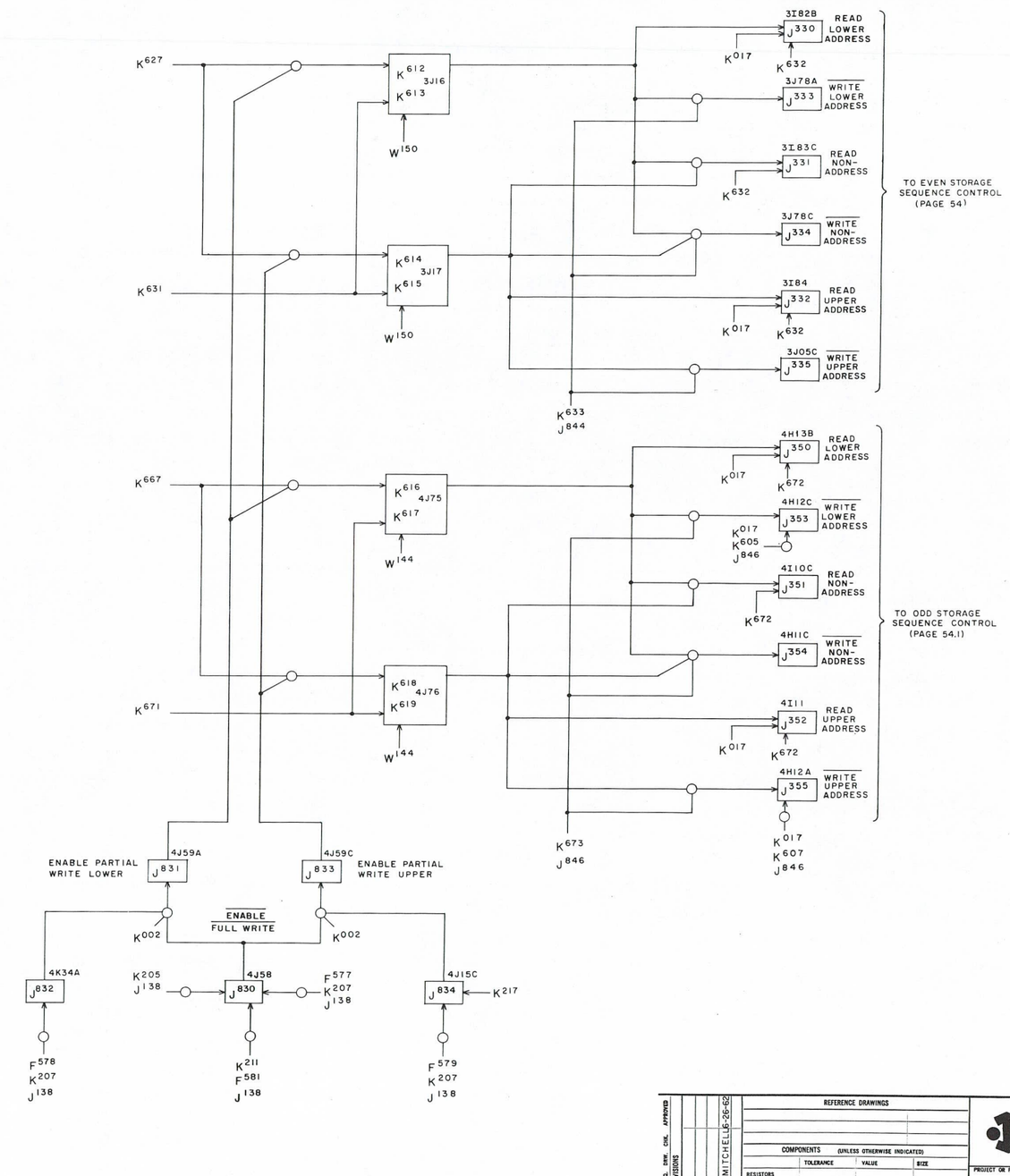

REV.	AUTH.	DATE	REVISIONS	DRW.	CHK.	APPROVED

DESIGNED - JOHN MITCHELL 6-26-62
DRAWN -
CHECKED -
APPROVED -

REFERENCE DRAWINGS

COMPONENTS (UNLESS OTHERWISE INDICATED)

	TOLERANCE	VALUE	SIZE
RESISTORS			
CAPACITORS			

TITLE INITIATE STORAGE REFERENCE CIRCUIT

CONTROL DATA CORPORATION

PROJECT OR PRODUCT 1604-A

DRAWING NUMBER XDP 214543 REV. G

PAGE 57

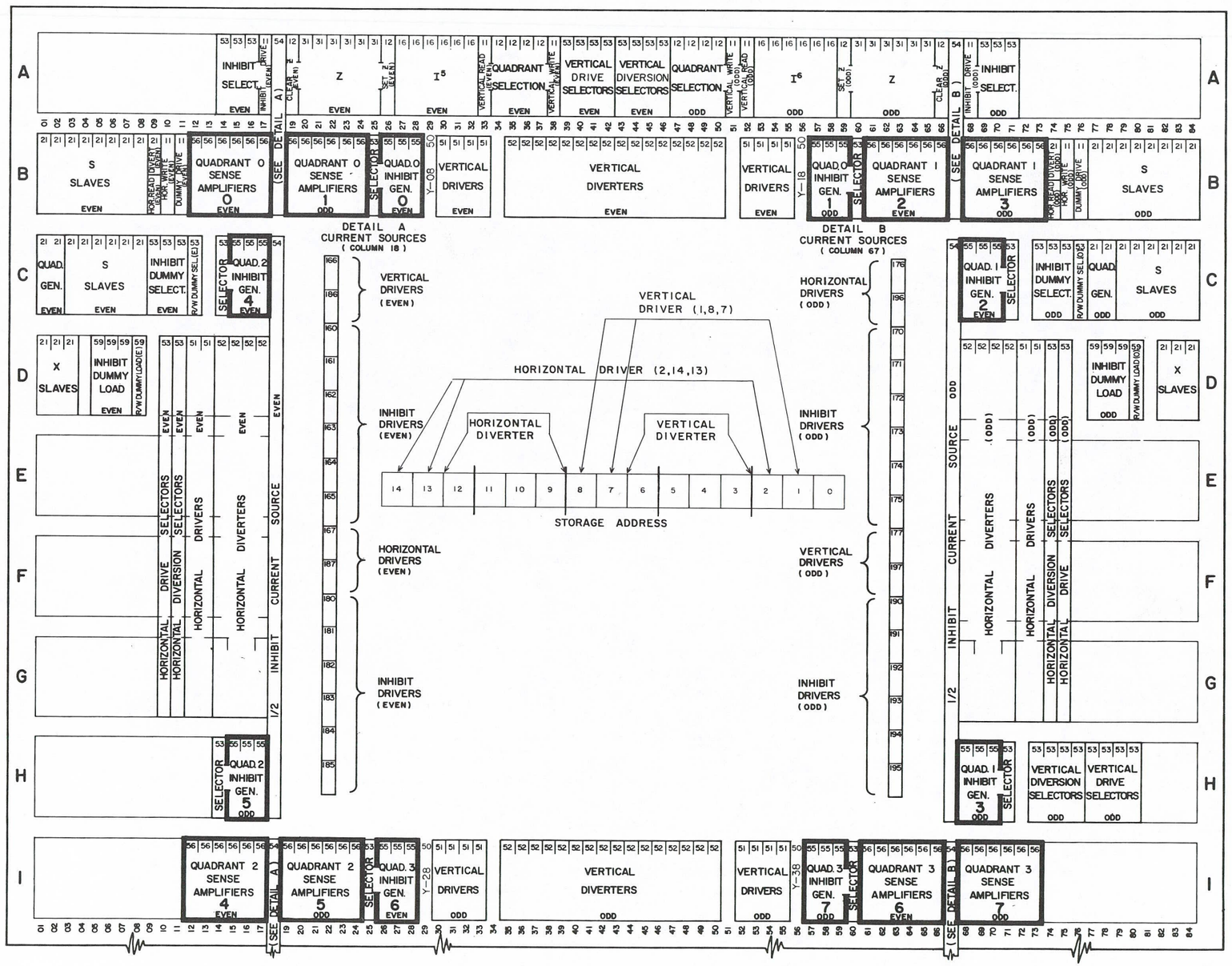

NOTE

CIRCUITS LOCATED IN AREAS ENCLOSED BY BOLD LINES ARE ENERGIZED BY ADDRESS ---- X, WHERE X IS LOWEST OCTAL DIGIT OF ADDRESS AND APPEARS IN BOLD FACE WITHIN THE AREAS.

REFERENCE DRAWINGS

COMPONENTS (UNLESS OTHERWISE INDICATED)

	TOLERANCE	VALUE	SIZE
RESISTORS			
CAPACITORS			

REVISIONS

APPROVED		
CHECKED	O.H.B.	7-13-59
DRAWN	S.L.K.	7-13-59
DESIGNED	O.H.BERG	7-7-59

TITLE STORAGE CARD, PLACEMENT DIAGRAM

CONTROL DATA CORPORATION

PROJECT OR PRODUCT 1604-A

DRAWING NUMBER XDP 214515 REV H

PAGE 58

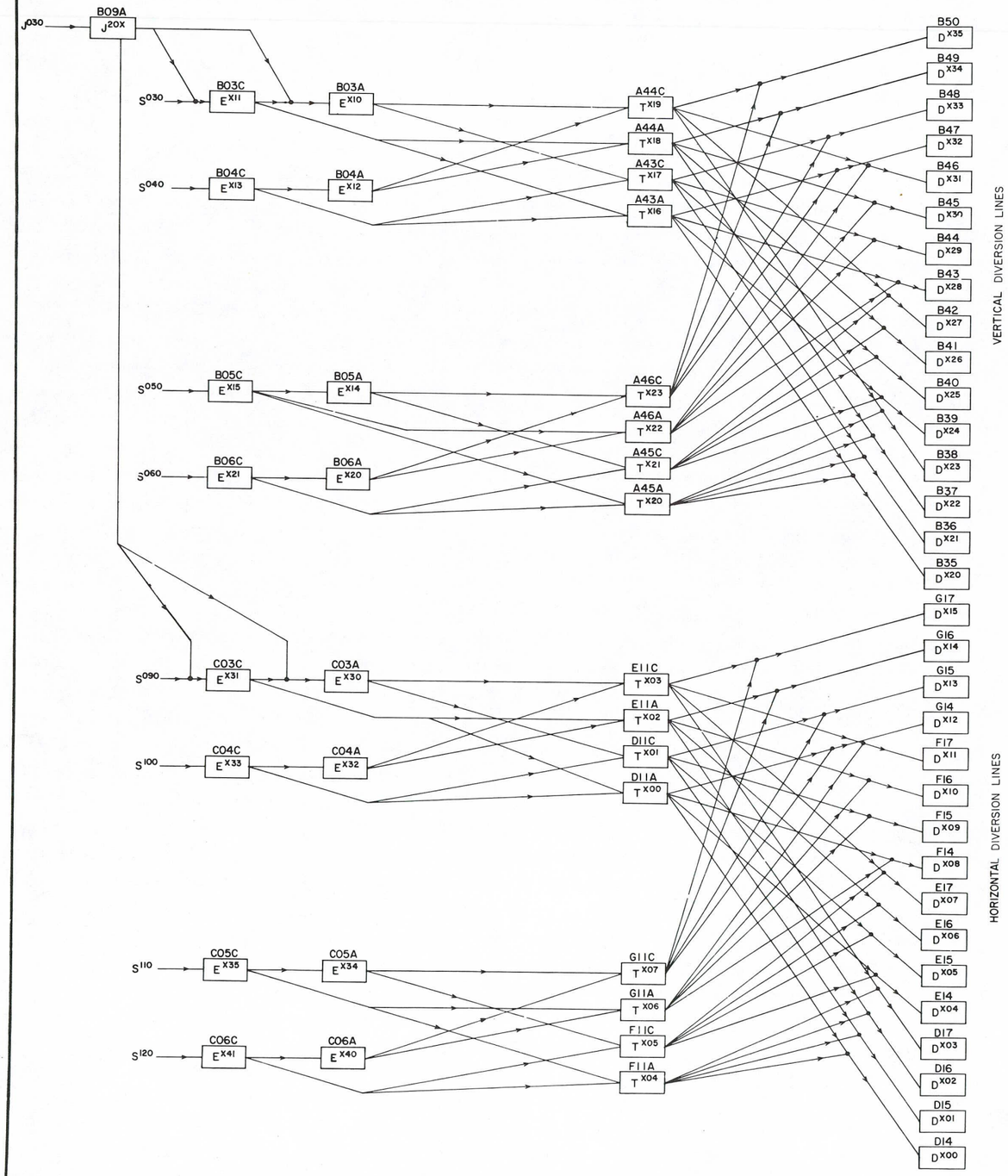

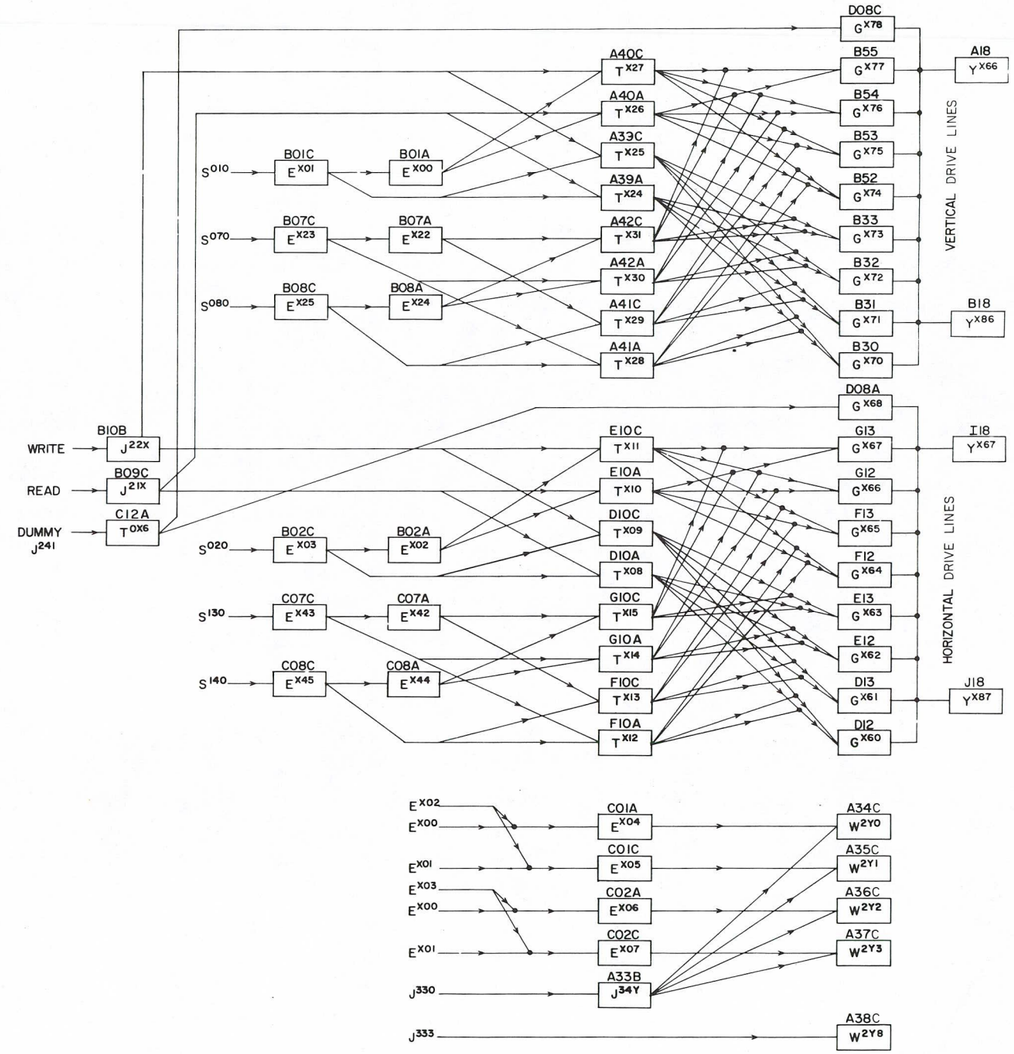

NOTES:

1. EACH ARROW REPRESENTS A DIODE.
2. SUBSTITUTE APPROPRIATE CHASSIS NUMBER FOR "X" (i.e. E^{X06} IS E^{106} ON CHASSIS 1, E^{206} ON CHASSIS 2.)
3. SUBSTITUTE Y=1 CHASSIS 1, Y=2 CHASSIS 2, Y=3 CHASSIS 3. LOWER OCTAL DIGIT, Y=0 CHASSIS 3 UPPER OCTAL DIGIT, Y=4 CHASSIS 4, Y=5 CHASSIS 5, Y=6 CHASSIS 6, Y=7 CHASSIS 7 LOWER OCTAL DIGIT, Y=9 CHASSIS 7 UPPER OCTAL DIGIT, Y=8 CHASSIS 8.
4. SEE NOTE 3, P.56.0 CONCERNING INPUTS TO TO E^{---} TERMS.

REFERENCE DRAWINGS

COMPONENTS (UNLESS OTHERWISE INDICATED)

	TOLERANCE	VALUE	SIZE
RESISTORS			
CAPACITORS			

TITLE STORAGE SELECTION EVEN

CONTROL DATA CORPORATION

PROJECT OR PRODUCT 1604-A

DRAWING NUMBER XDP 214588 REV A

PAGE 59.0

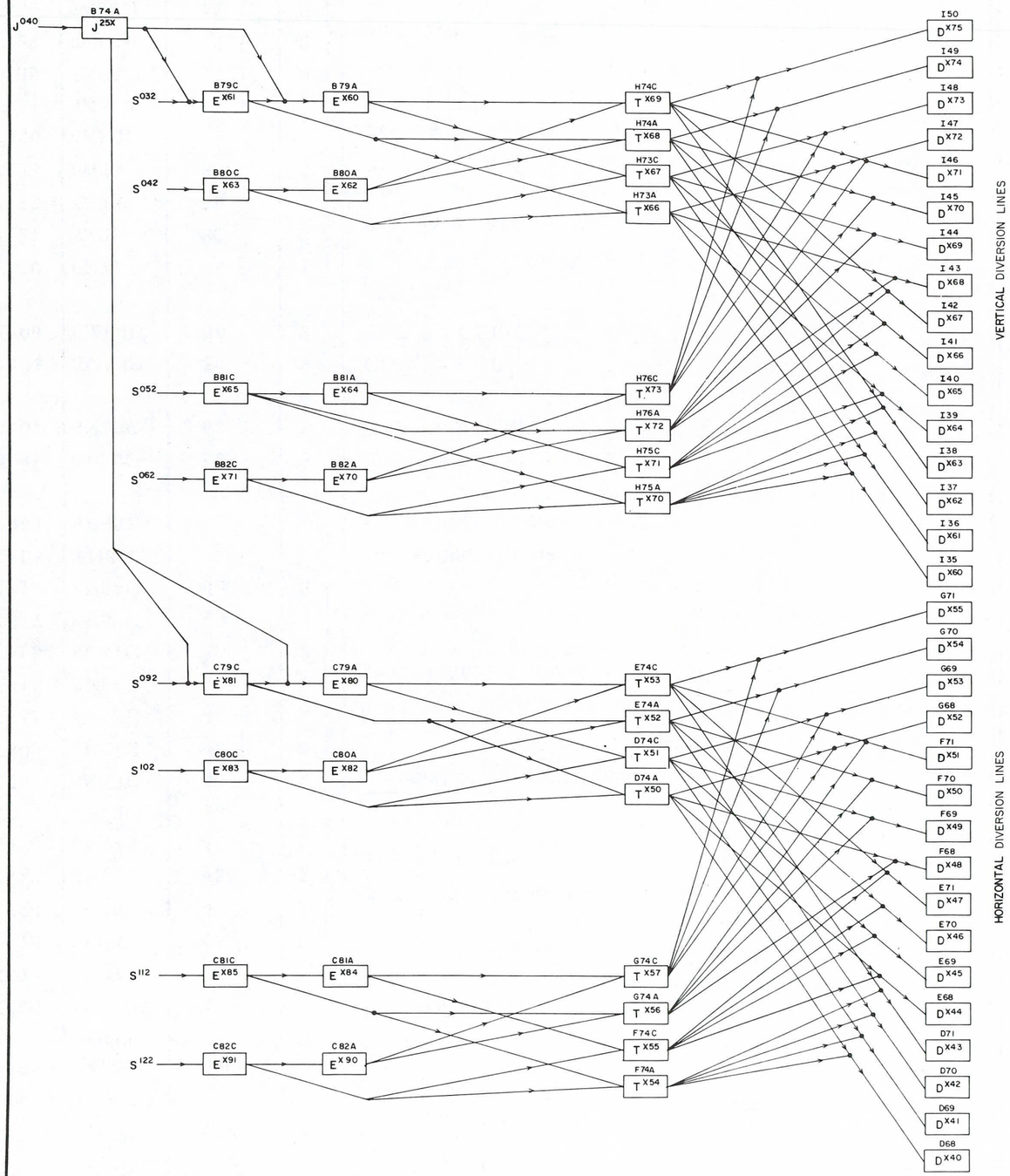

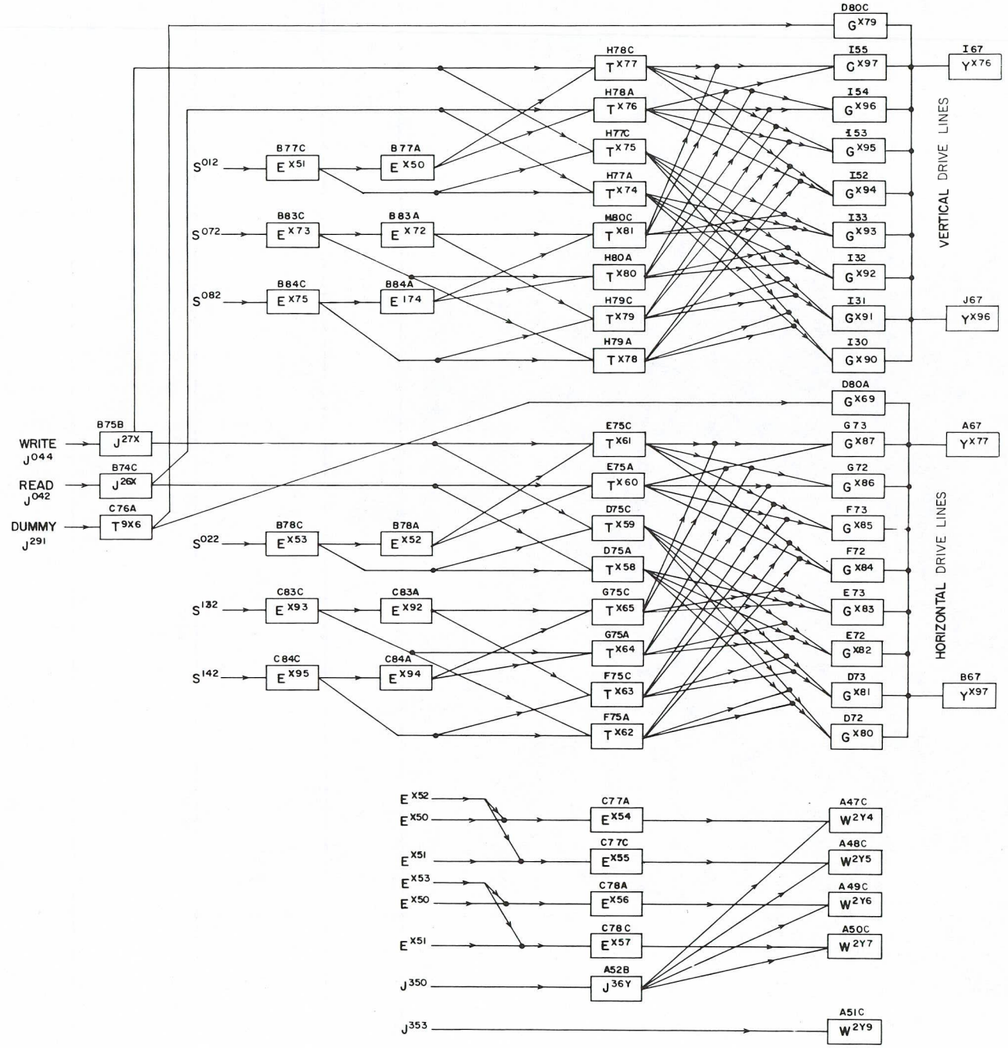

NOTES:

1. EACH ARROW REPRESENTS A DIODE.
2. SUBSTITUTE APPROPRIATE CHASSIS NUMBER FOR "X". (ie. E^{X06} IS E^{106} ON CHASSIS 1, E^{206} ON CHASSIS 2.)
3. SUBSTITUTE Y=1 CHASSIS 1, Y=2 CHASSIS 2, Y=3 CHASSIS 3. LOWER OCTAL DIGIT, Y=0 CHASSIS 3 UPPER OCTAL DIGIT, Y=4 CHASSIS 4, Y=5 CHASSIS 5, Y=6 CHASSIS 6, Y=7 CHASSIS 7 LOWER OCTAL DIGIT, Y=9 CHASSIS 7 UPPER OCTAL DIGIT, Y=8 CHASSIS 8.
4. SEE NOTE 3, P. 56.1 CONCERNING INPUTS TO E^{---} TERMS.

REV.	AUTH.	DATE	REG.	DRW.	CHK.	APPROVED
REVISIONS						
					APPROVED -	
					CHECKED - D. SWEDBERG	5-29-60
					DRAWN - [signature]	5-24-60
					DESIGNED - O.H. BERG	4-4-60

REFERENCE DRAWINGS

COMPONENTS (UNLESS OTHERWISE INDICATED)	TOLERANCE	VALUE	SIZE
RESISTORS			
CAPACITORS			

TITLE STORAGE SELECTION ODD

CONTROL DATA CORPORATION

PROJECT OR PRODUCT 1604-A

DRAWING NUMBER XDP 214573 REV A

PAGE 59.1

TERM	LOCATION	PAGE	QUAD.	DEFINITION
I241	4K54C	8.1	0	f = 00 + 77
I385	6M82	31	3	EXF Code = X1XXX
I386	6N26	31	3	EXF Code = X2XXX
J508	6M83A	30	3	EXF Code = XXXX0
J513	6O80C	30	3	Select 0X000,1
K256	4P41B	45	1	$\overline{\text{Aux. Request}}$
K774	6P37	45	1	Aux. Ref. Designator
K775	6P38	45	1	
K776	6P39	45	1	
K777	6P41	45	1	
K778	6P42	45	1	
K779	6P43	45	1	
K796	6K83B	53	0	$\overline{\text{Internal Interrupt Request}}$
K809	6P54C	45	2	Rank 1 Aux. Scanner
K811	6P55C	45	2	
K813	6P56C	45	2	
K815	6P57C	45	2	
K817	6P58C	45	2	
K819	6P59C	45	2	
K883	4N81C	33		Clock Request Slave
N962	6P65B			Even Clock Slave
O091	8L20C	62	3	EXF Code = X(001)XXX
O101	8N20C	62	3	EXF Code = X(010)XXX
R907	6M63B	36	2	$CCR_L = CCR_U$
R908	6M64B	36	2	$CCR_L \neq CCR_U$
V120	6N71	29	1	Resync Pulse
V121	6N72	29	3	
V122	6N73	29	1	
V123	6N74	29	3	
V350	4K50C	8.1	1	RO Seq.
V351	4K51A	8.1	1	
V455	6N66	17.1	0	Aux. Seq.
V457	6N64B	17.1	0	
V459	6N62B	17.1	0	
V466	6O48A	17.1	0	

TERM	LOCATION	PAGE	QUAD.	DEFINITION
W152	6L60C	25	3	Internal M. C.
W153	6L61A	25	3	
W154	6L61C	25	2	
W155	6L60A	25	3	
W159	6L62	25	1	External M. C.
W163	7J49	25	0	
W170	6N49B	25	3	Internal M. C.

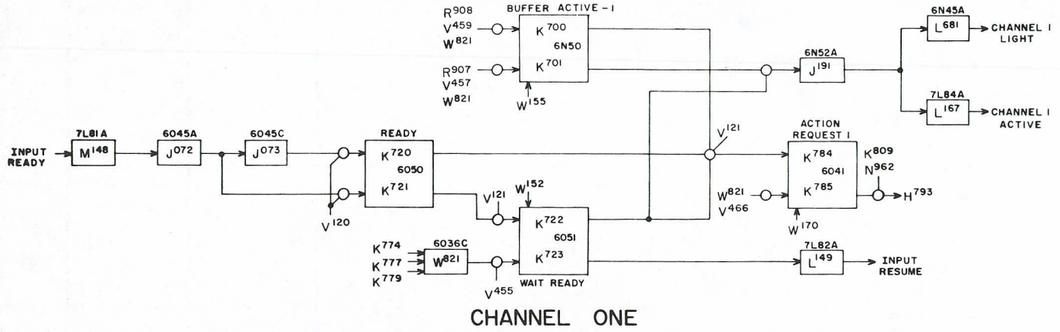

CHANNEL ONE

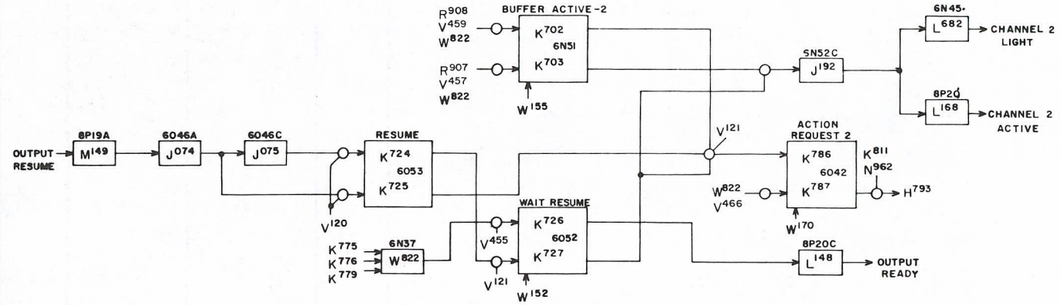

CHANNEL TWO

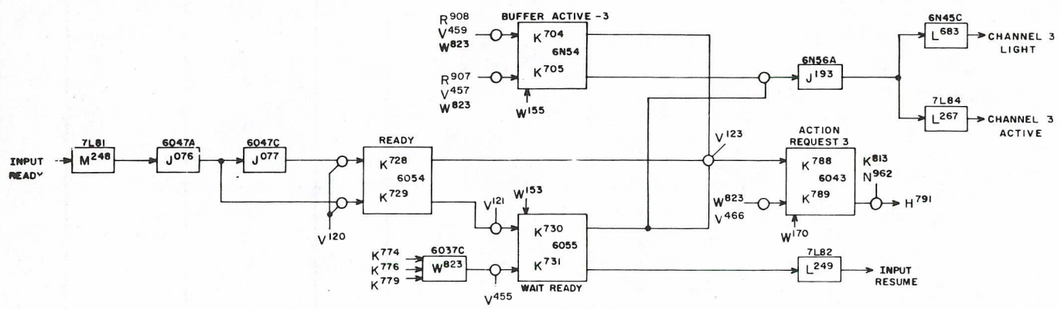

CHANNEL THREE

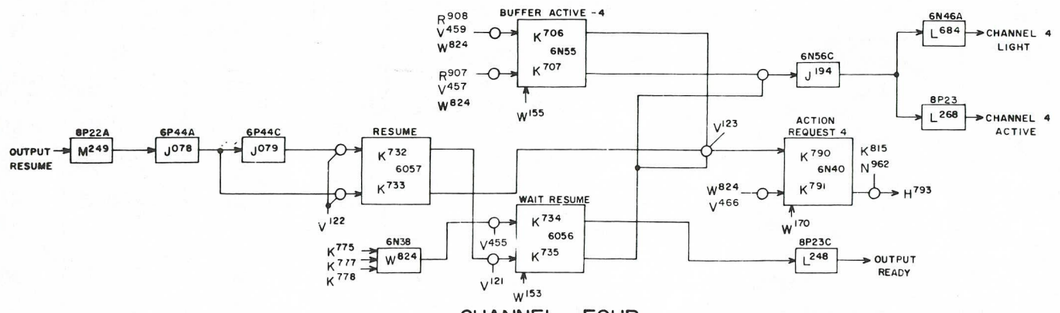

CHANNEL FOUR

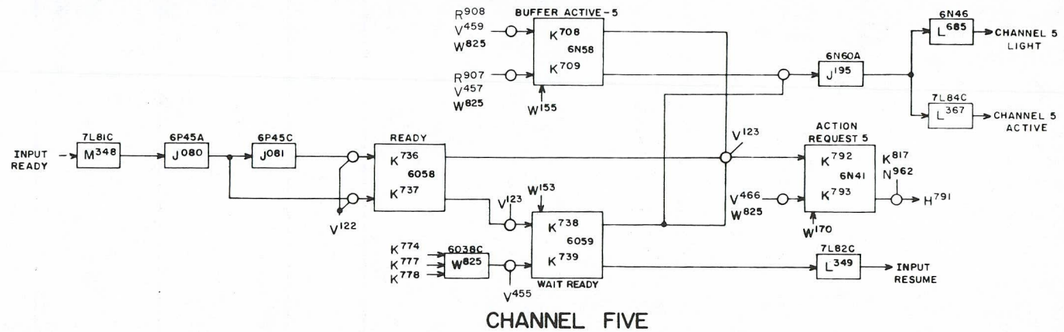

CHANNEL FIVE

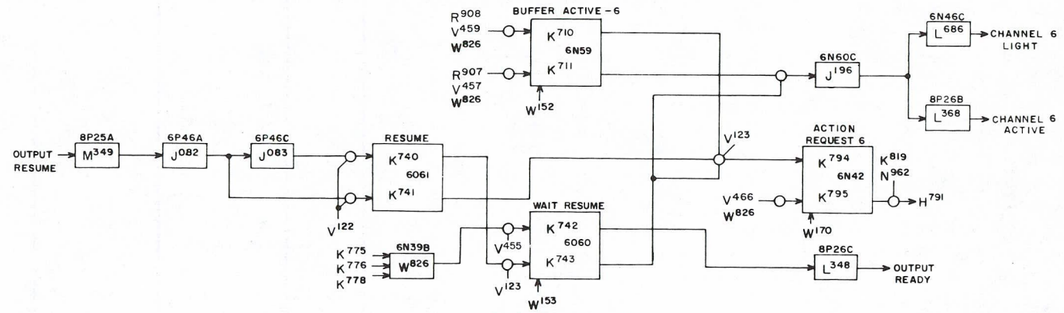

CHANNEL SIX

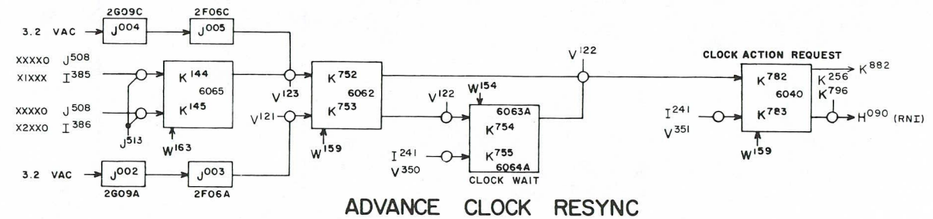

ADVANCE CLOCK RESYNC

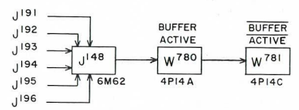

REV.	APPR.	DATE	REVISIONS	APPROVED	
				DRAWN - D.W.S.	5-5-60
				CHECKED - E.A.B.	5-5-60
				DESIGNED - W.E. LEITZE	3-15-60

REFERENCE DRAWINGS

COMPONENTS (UNLESS OTHERWISE INDICATED)

	TOLERANCE	VALUE	SIZE
RESISTORS			
CAPACITORS			

TITLE: READY RESUME CIRCUITRY

CONTROL DATA CORPORATION

PRODUCT OR PROJECT: 1604-A

DRAWING NUMBER: XDP 214529 REV B

PAGE 60

TERM	LOCATION	PAGE	QUAD.	DEFINITION
F575	4N07C	19.4	1	62
V480	6L69	17.1	1	Aux. Seq.
V481	6N76A	17.0	0	
V527	4M34C	10.1	0	S & T Seq.
V529	4M35C	10.1	0	

TERM	LOCATION	PAGE	QUAD.	DEFINITION

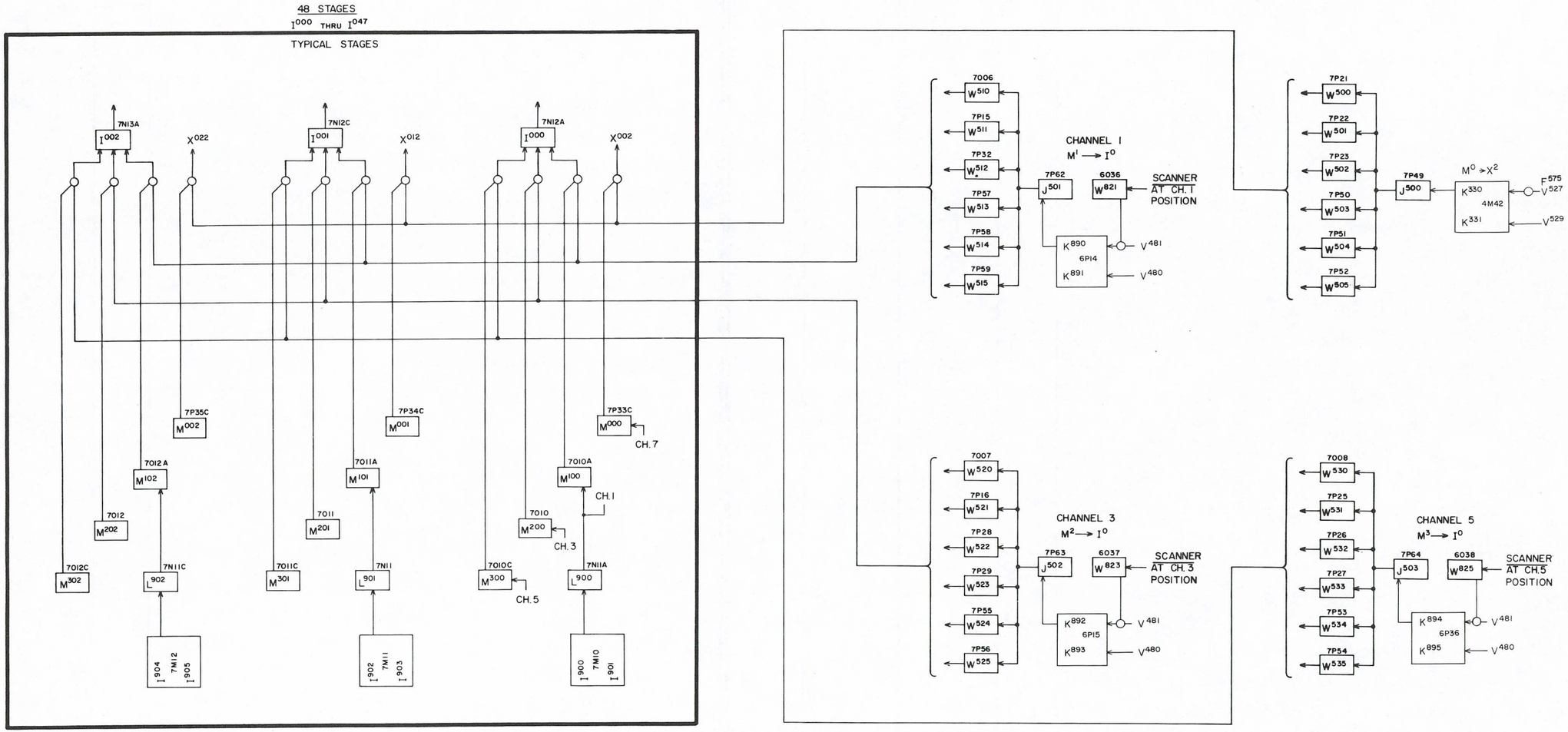

REV.	APPR.	DATE	DESCRIPTION
	APPROVED		
	CHECKED	D.W.S.	4-4-60
	DRAWN	R.R.M.	4-4-60
	DESIGNED	W.E. LEITZE	2-19-60

REFERENCE DRAWINGS

CONTROL DATA CORPORATION

PROJECT OR PRODUCT
1604-A

DRAWING NUMBER
XDP 214555

REV
E

PAGE
61

TITLE
COMPUTER INPUT
FROM EXTERNAL EQUIPMENT

TERM	LOCATION	PAGE	QUAD.	DEFINITION
J913	6M66A	16	2	$\overline{\text{Select + Sense}}$
K034	6M57A	16	3	EXF Counter
K716	6M52B	16	2	$\overline{\text{Select}}$
K718	6M54B	16	2	$\overline{\text{Sense}}$

TERM	LOCATION	PAGE	QUAD.	DEFINITION

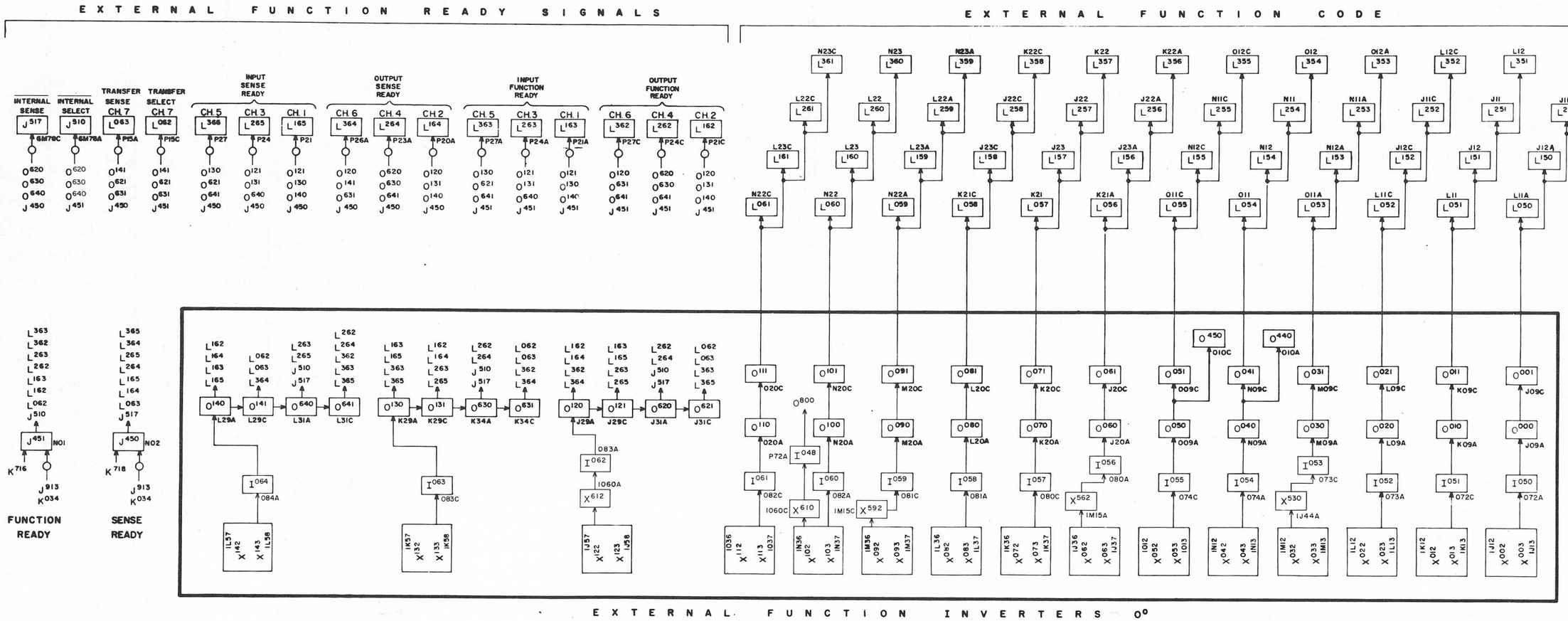

NOTE:
ALL JACKS ON CHASSIS 8
UNLESS OTHERWISE SHOWN

REFERENCE DRAWINGS		CONTROL DATA CORPORATION
COMPONENTS (UNLESS OTHERWISE INDICATED)		
RESISTORS		1604-A
CAPACITORS		
TITLE EXTERNAL FUNCTION INVERTERS 0°		XDP 214564 C
		62

DRAWN E.A. BUTENHOFF 5-3-60
DESIGNED W.E. LEITZE 3-14-60

TERM	LOCATION	PAGE	QUAD.	DEFINITION
F533	4M14B	19.4	0	63
J772	8D82A	41	3	$Z \rightarrow I^1$
J773	8P29A	41	3	$CCR \rightarrow I^1$
K837	4P69C	10.1	3	S & T Seq.
N951	4N84B			Odd Clock Slave
V441	4N21A	17.1	0	Aux. Seq.
V447	8O61B	17.1	1	
V454	4N38A	17.1	1	
V472	4M51C	17.1	1	
V541	4M46	10.1	3	S & T Seq.
V543	4M47C	10.1	3	
V545	4M49	10.2	0	
V552	4I10A	10.2	2	
W140	4K76A	25	0	Internal M. C.
W142	4K77	25	0	
W144	4K78	25	1	
W145	4K79	25	1	

TERM	LOCATION	PAGE	QUAD.	DEFINITION

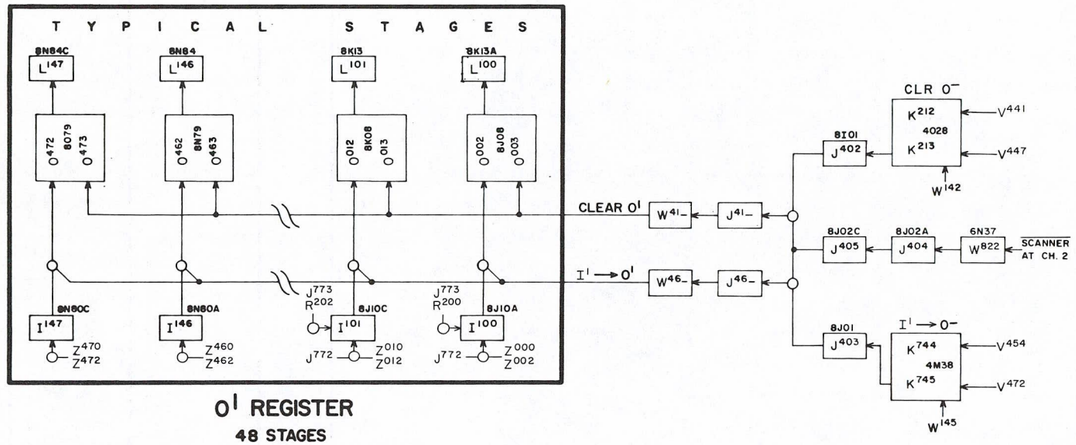

O1 REGISTER

48 STAGES

O^{002}/O^{003} THROUGH O^{472}/O^{473}

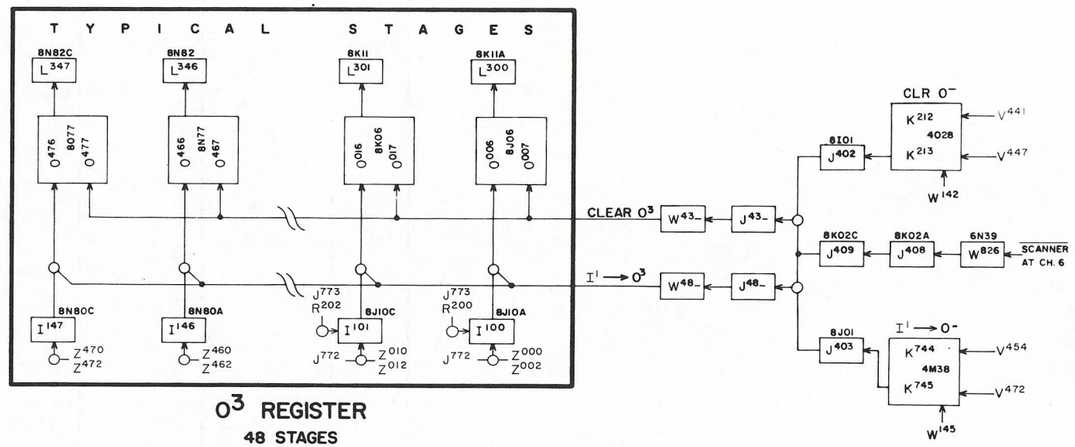

O3 REGISTER

48 STAGES

O^{006}/O^{007} THROUGH O^{476}/O^{477}

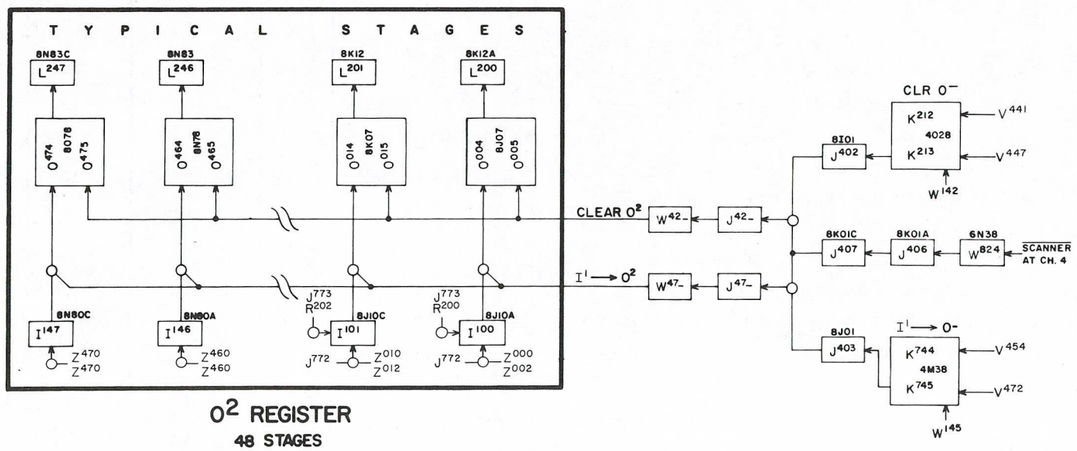

O2 REGISTER

48 STAGES

O^{004}/O^{005} THROUGH O^{474}/O^{475}

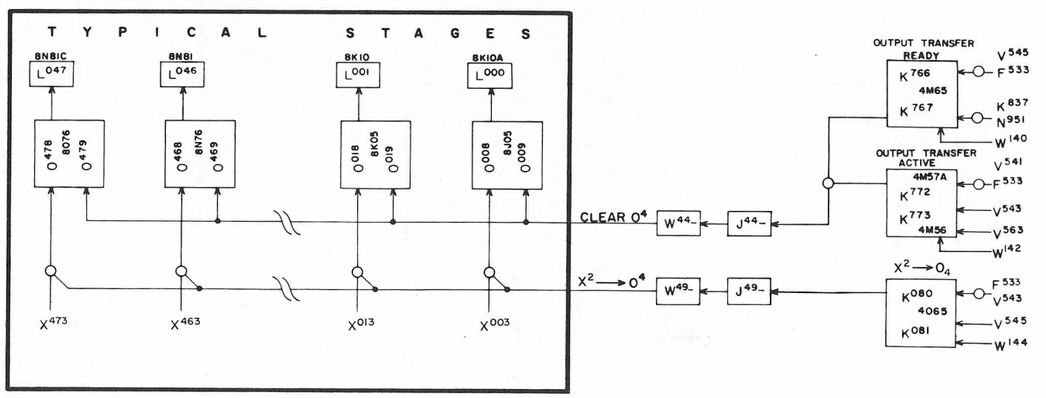

O4 REGISTER

48 STAGES

O^{008}/O^{009} THROUGH O^{478}/O^{479}

REV.	AUTH.	DATE	DWG.	SIGN.	CHK.	APPROVED

REVISIONS

APPROVED: -
CHECKED: D.W.S. 4-29-60
DRAWN: E.A.B. 4-29-60
DESIGNED: W.E. LEITZE 2-1-60

REFERENCE DRAWINGS

COMPONENTS (UNLESS OTHERWISE INDICATED)

	VOLTAGE	VALUE	SIZE
RESISTORS			
CAPACITORS			

TITLE: OUTPUT REGISTERS O^1, O^2, O^3, & O^4

CONTROL DATA CORPORATION

PROJECT OR PROGRAM: 1604-A

DRAWING NUMBER: XDP 214535 REV: B

PAGE: 63

TERM	LOCATION	PAGE	QUAD.	DEFINITION
H251	7K45	71	3	P. T. Reader Control
H252	7K47	71	3	
J980	7L14A	71	0	P. T. Reader Control
J981	7L14C	71	0	
J991	7L17	67	0	$\overline{\text{Channel 1 Buffer Active}}$
J993	7K42C	67	3	Space Contact - Typewriter Control
V251	7K40	71	3	P. T. Reader Control
V252	7K41	71	3	
V261	7L02	71	0	Chnl. 1 Input Buffer Active Pulse
V267	7L08	71	3	Reader Feed Pulse
V269	7L42	67	0	Gate Keyboard
W980	7J10A			Clear Assembly Register
W981	7J10C	71	0	
K931	7J09C	71	1	P.T. Reader in Character Mode
K935	7L05C	71	0	P.T. Reader Buffer Active Circuit

TERM	LOCATION	PAGE	QUAD.	DEFINITION

INPUT ASSEMBLY REGISTER

48 STAGES

I^{900}/I^{901} THROUGH I^{994}/I^{995}

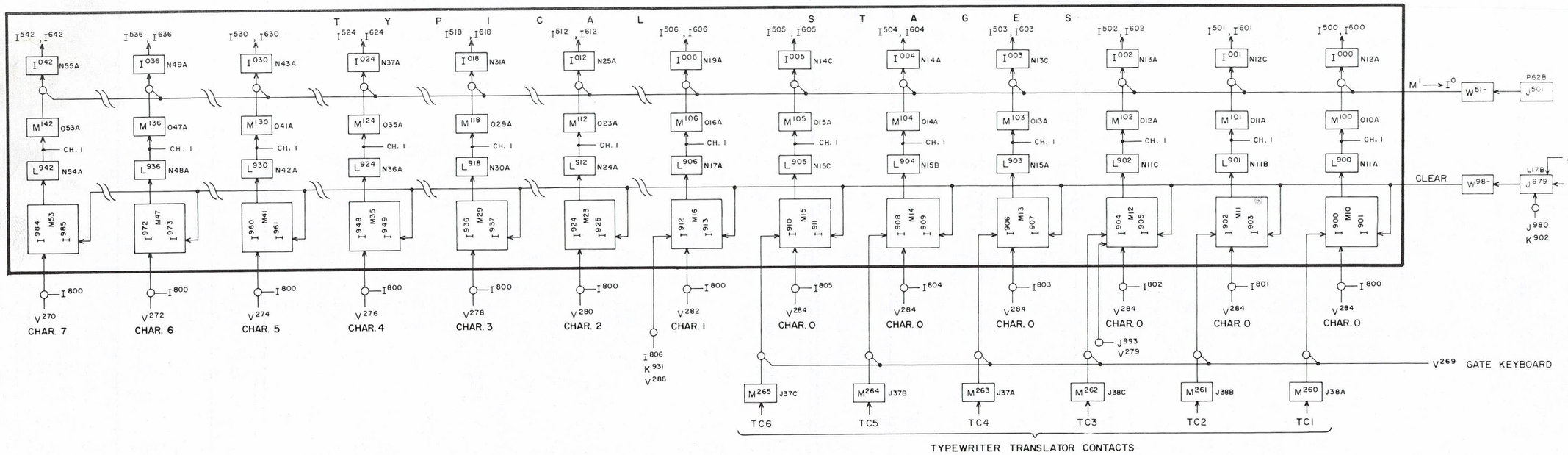

ASSEMBLY COUNTER

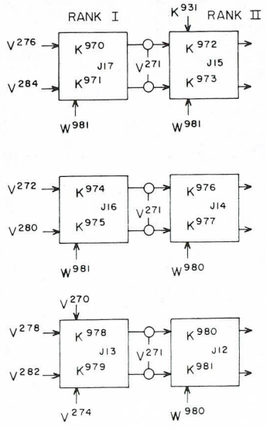

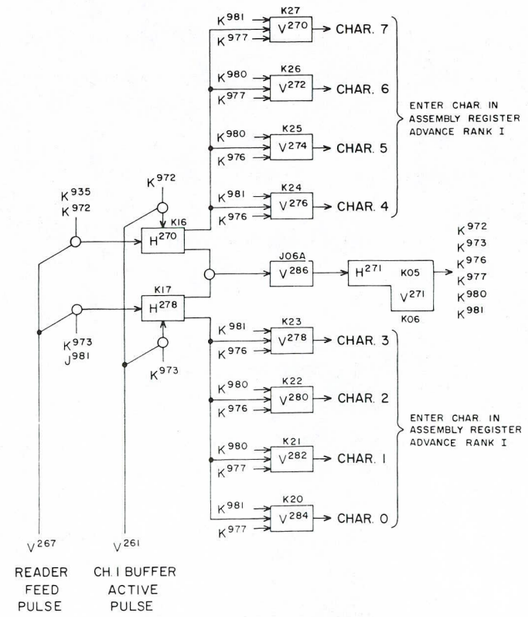

READER REGISTER

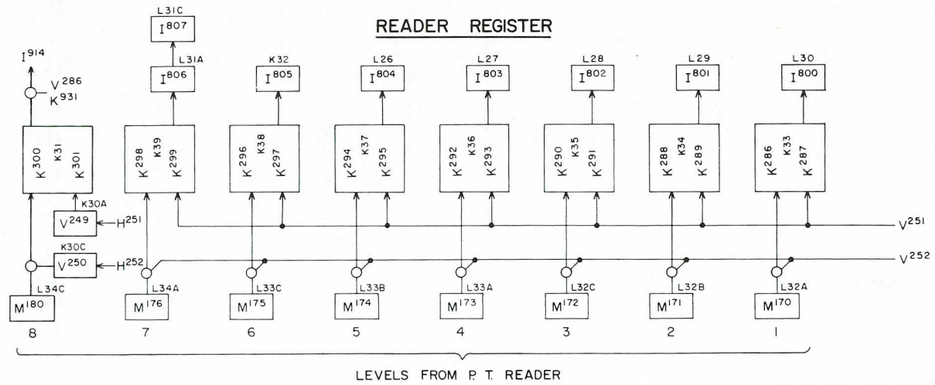

NOTES

1. ALL JACKS ON CHASSIS 7 UNLESS OTHERWISE SHOWN

REV.	AUTH.	DATE	REG.	DRW.	CHK.	APPROVED
REVISIONS						
-						-
						APPROVED -
						CHECKED - D. W. S. 5-19-60
						DRAWN - I. E. A. B. 5-19-60
						ASSIGNED TO - ASCHENBRENNER 3-2-60

REFERENCE DRAWINGS

COMPONENTS (UNLESS OTHERWISE INDICATED)	TOLERANCE	VALUE	SIZE
RESISTORS			
CAPACITORS			

CONTROL DATA CORPORATION

PROJECT OR PRODUCT: 1604-A

TITLE: INPUT ASSEMBLY REGISTER

DRAWING NUMBER: XDP 214534 REV. E

PAGE 64

TERM	LOCATION	PAGE	QUAD.	DEFINITION
J990	7N73	69	3	Chnl. 2 Buffer Inactive
J998	7M69B	67	3	Typewriter Control
K914	7L76	66	0	Assembly Mode FF
K915	7L76C	66	0	
K950	7K72A	69	0	P. T. Punch Feed I FF
K951	7K72C	69	0	
K952	7K71A	69	0	P. T. Punch Feed II FF
K953	7K71C	69	0	
K990	7K43A	67	3	Typewriter Control
K993	7K44C	67	3	
V255	7J72	69	1	
V256	7K76	69	1	P. T. Punch Control
V260	7K75	69	1	
V273	7J71	69	1	
V294	7J24	67	3	Typewriter Control
V441	4N21A	17.1	0	
V447	8O61B	17.1	1	Aux. Seq.
V454	4N38A	17.1	1	
V472	4M51C	17.1	1	
W142	4K77	25	0	Internal M. C.
W145	4K79	25	1	

TERM	LOCATION	PAGE	QUAD.	DEFINITION

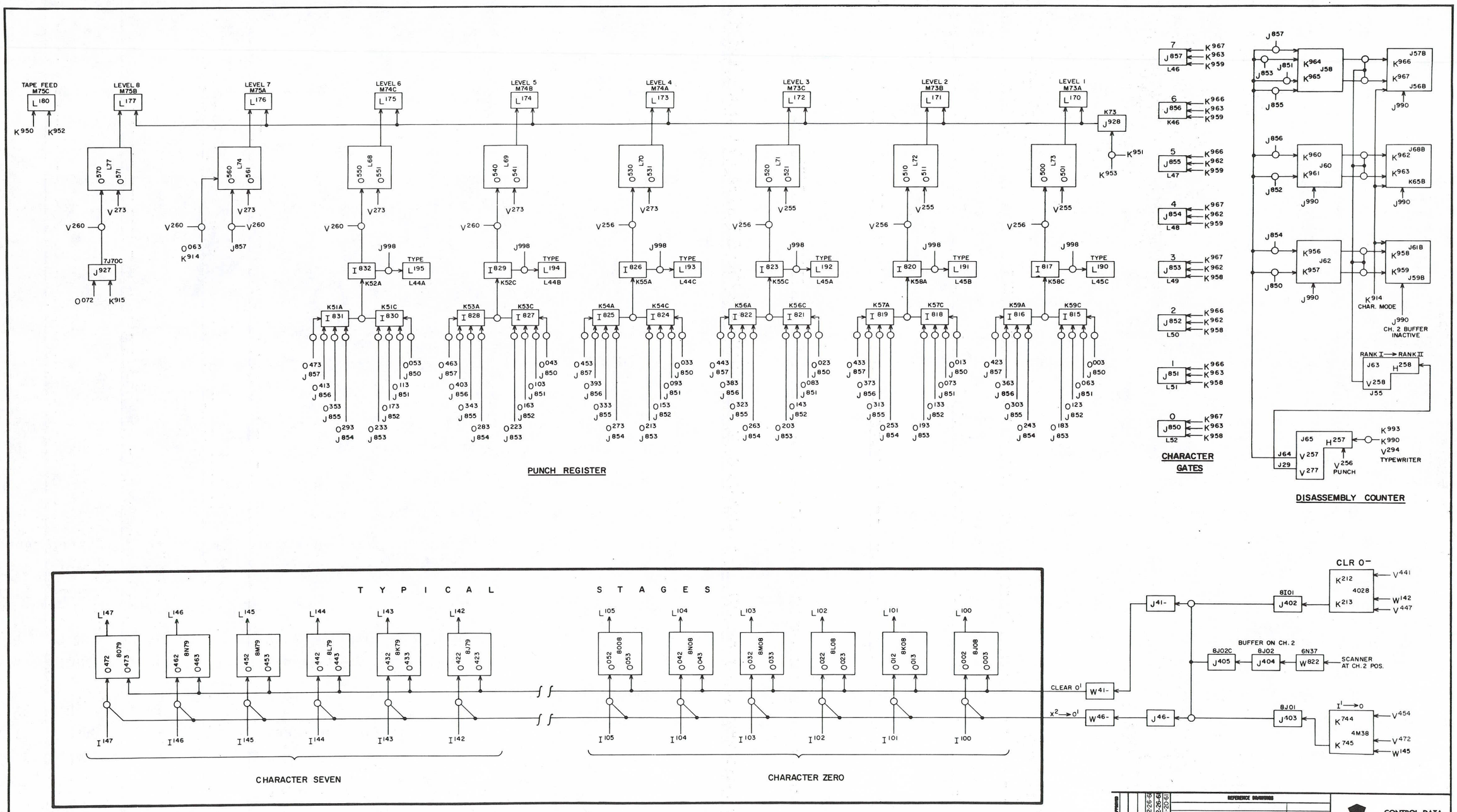

OUTPUT REGISTER 0^1

48 STAGES

$0^{002}/0^{003}$ THROUGH $0^{472}/0^{473}$

NOTE:
ALL JACKS ON CHASSIS 7
UNLESS OTHERWISE SHOWN.

REV. AUTH. DATE SIGN. DIST. CHG. APPROVED	REVISIONS		
APPROVED			
CHECKED	D. W. S.	12-26-61	
DRAWN	E. STRAITON	12-26-61	
DESIGNED	S. E. A.	11-20-61	

REFERENCE DRAWINGS

COMPONENTS (UNLESS OTHERWISE INDICATED)

	TOLERANCE	VALUE	SIZE
RESISTORS			
CAPACITORS			

TITLE: OUTPUT DISASSEMBLY REGISTER (BRPE-11)

CONTROL DATA CORPORATION

PROJECT OR PRODUCT: 1604-A

DRAWING NUMBER: XDP 214547 REV. A

PAGE 65

TERM	LOCATION	PAGE	QUAD.	DEFINITION
I806	7L31A	64	3	7th Level (Reader Register)
K929	7J08	71	1	Load Point FF (P. T. Reader)
K931	7J09	71	1	Character Mode FF (P. T. Reader)
K971	7J17C	64	2	Assembly Counter
K975	7J16C	64	2	
K979	7J13C	64	2	
V263	7K08	71	1	Reader Mode Switch Down
V267	7L08B	71	3	P. T. Reader Feed Pulse
W161	7J39C	25	0	External M. C.
W162	7K50	25	0	
W163	7J49	25	0	

SELECT PUNCH

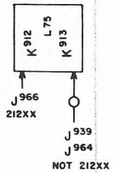

ASSEMBLY MODE

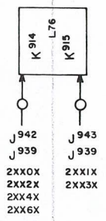

PUNCH MOTOR

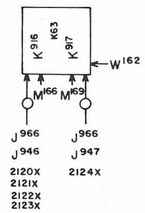

SELECT READER

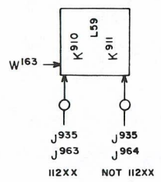

INTERRUPT ON END OF TAPE

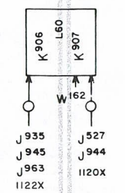

END OF TAPE (READER)

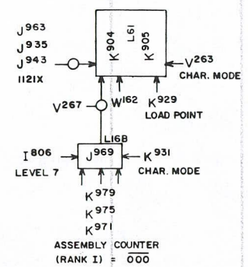

SELECT KEYBOARD

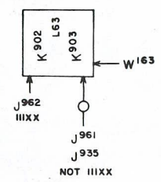

SELECT TYPE

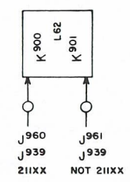

INTERRUPT ON CARRIAGE RETURN OR TAB

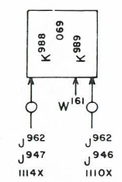

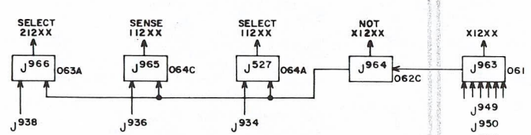

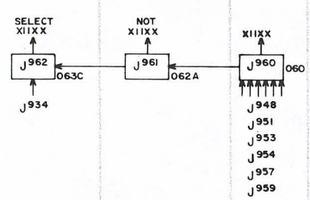

NOTE:
ALL JACKS ON CHASSIS 7 UNLESS OTHERWISE SHOWN

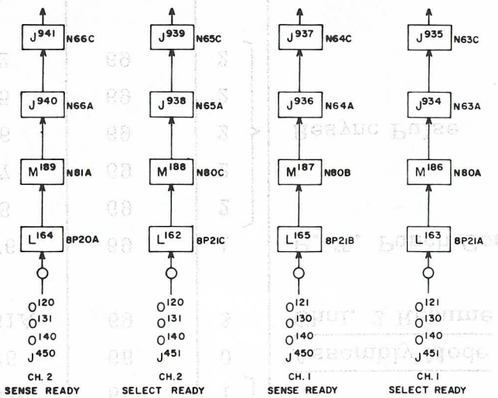

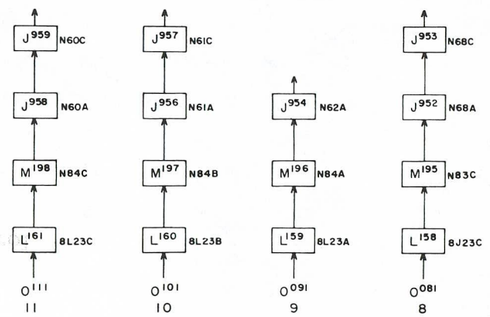

FROM EXTERNAL FUNCTION INVERTERS

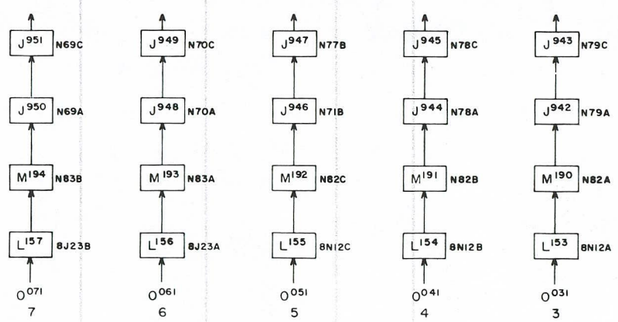

TO SENSE & INTERRUPT CKTS. SEE PAGE 30

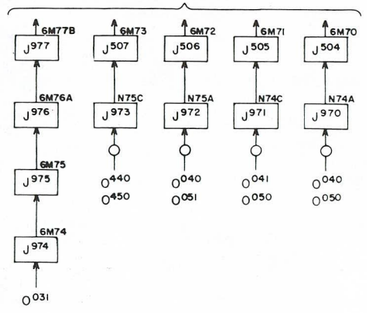

REV.	APPR.	DATE	REVISIONS	ENG.	DSN.	CHK.	APPROVED
				APPROVED			5-17-60
				CHECKED	D.W.S.		5-17-60
				DRAWN	E.A.B.		
				DESIGNED	S. ASCHENBRENNER		3-22-60

REFERENCE DRAWINGS

COMPONENTS (UNLESS OTHERWISE INDICATED)	TOLERANCE	VALUE	SIZE
RESISTORS			
CAPACITORS			

CONTROL DATA CORPORATION

PROJECT OR PRODUCT: 1604-A

TITLE: EXTERNAL FUNCTION TRANSLATOR

DRAWING NUMBER: XDP 214519 REV. B

PAGE 66

TERM	LOCATION	PAGE	QUAD.	DEFINITION
K902	7L63A	66	1	Select Keyboard FF
K903	7L63C	66	1	
K914	7L76	66	0	Assembly Mode
K968	7K61A	69	3	Chnl. 2 Resume
V256	7K76	69	1	P. T. Punch Control
V290	7J28	69	2	Resync Pulse
V291	7J27	69	2	
V292	7J26	69	2	
V293	7J25	69	2	
V296	7J22	69	2	
W161	7J39C	25	0	External M. C.
W162	7K50	25	0	

TERM	LOCATION	PAGE	QUAD.	DEFINITION

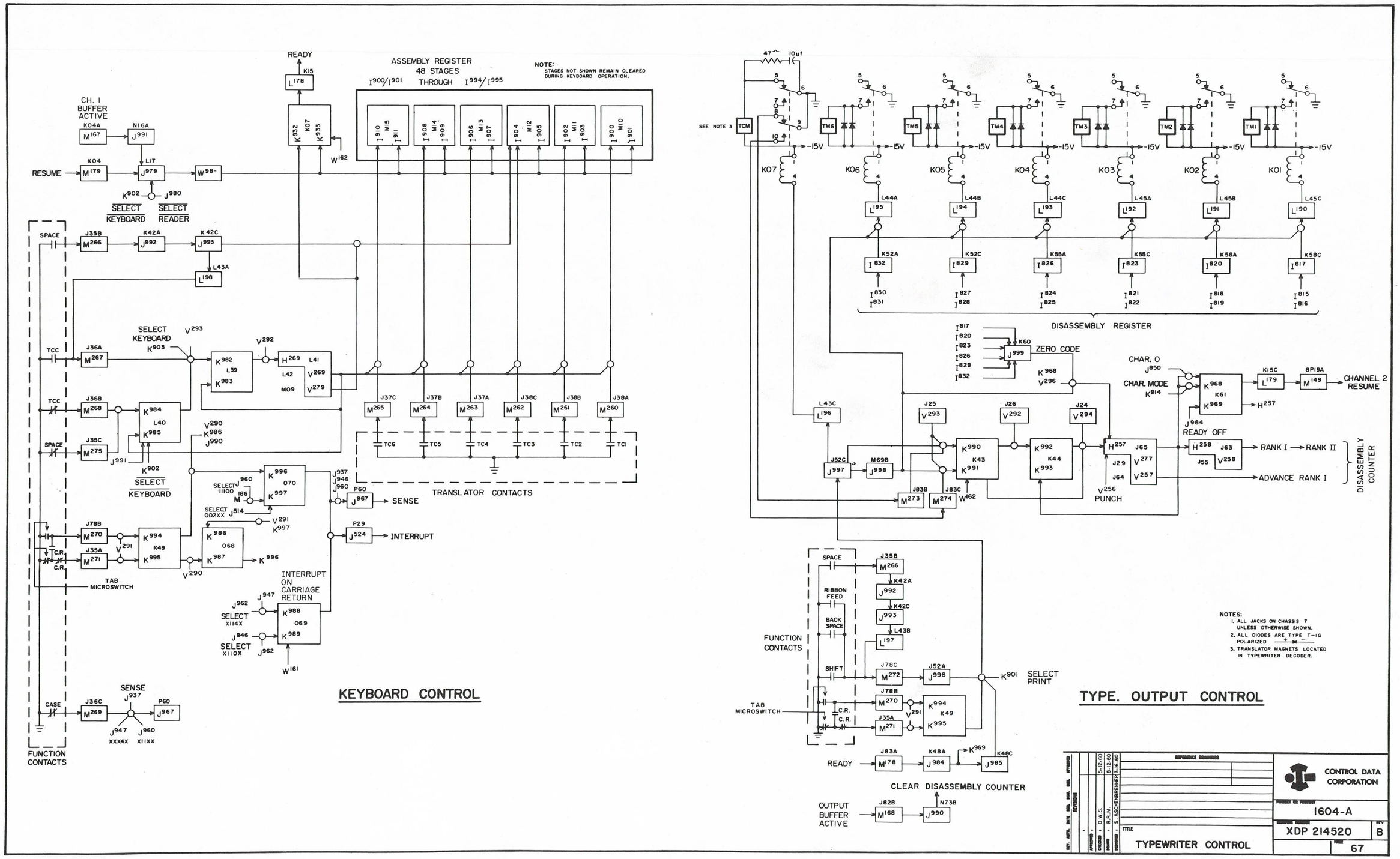

ASSEMBLY REGISTER
48 STAGES
THROUGH
NOTE:
STAGES NOT SHOWN REMAIN CLEARED DURING KEYBOARD OPERATION.
READY
CH. I BUFFER ACTIVE
RESUME
SELECT KEYBOARD
SELECT READER
SPACE
TCC
SELECT KEYBOARD
TRANSLATOR CONTACTS
SENSE
INTERRUPT
TAB MICROSWITCH
INTERRUPT ON CARRIAGE RETURN
SELECT X114X
SELECT X110X
CASE
FUNCTION CONTACTS
KEYBOARD CONTROL
SEE NOTE 3
DISASSEMBLY REGISTER
ZERO CODE
CHAR. O
CHAR. MODE
CHANNEL 2 RESUME
READY OFF
RANK I
RANK II
ADVANCE RANK I
DISASSEMBLY COUNTER
PUNCH
RIBBON FEED
BACK SPACE
SHIFT
FUNCTION CONTACTS
SELECT PRINT
TAB MICROSWITCH
READY
CLEAR DISASSEMBLY COUNTER
OUTPUT BUFFER ACTIVE
NOTES:
1. ALL JACKS ON CHASSIS 7 UNLESS OTHERWISE SHOWN.
2. ALL DIODES ARE TYPE T-1G POLARIZED
3. TRANSLATOR MAGNETS LOCATED IN TYPEWRITER DECODER.
TYPE. OUTPUT CONTROL
CONTROL DATA CORPORATION
1604-A
XDP 214520
B
67
TYPEWRITER CONTROL

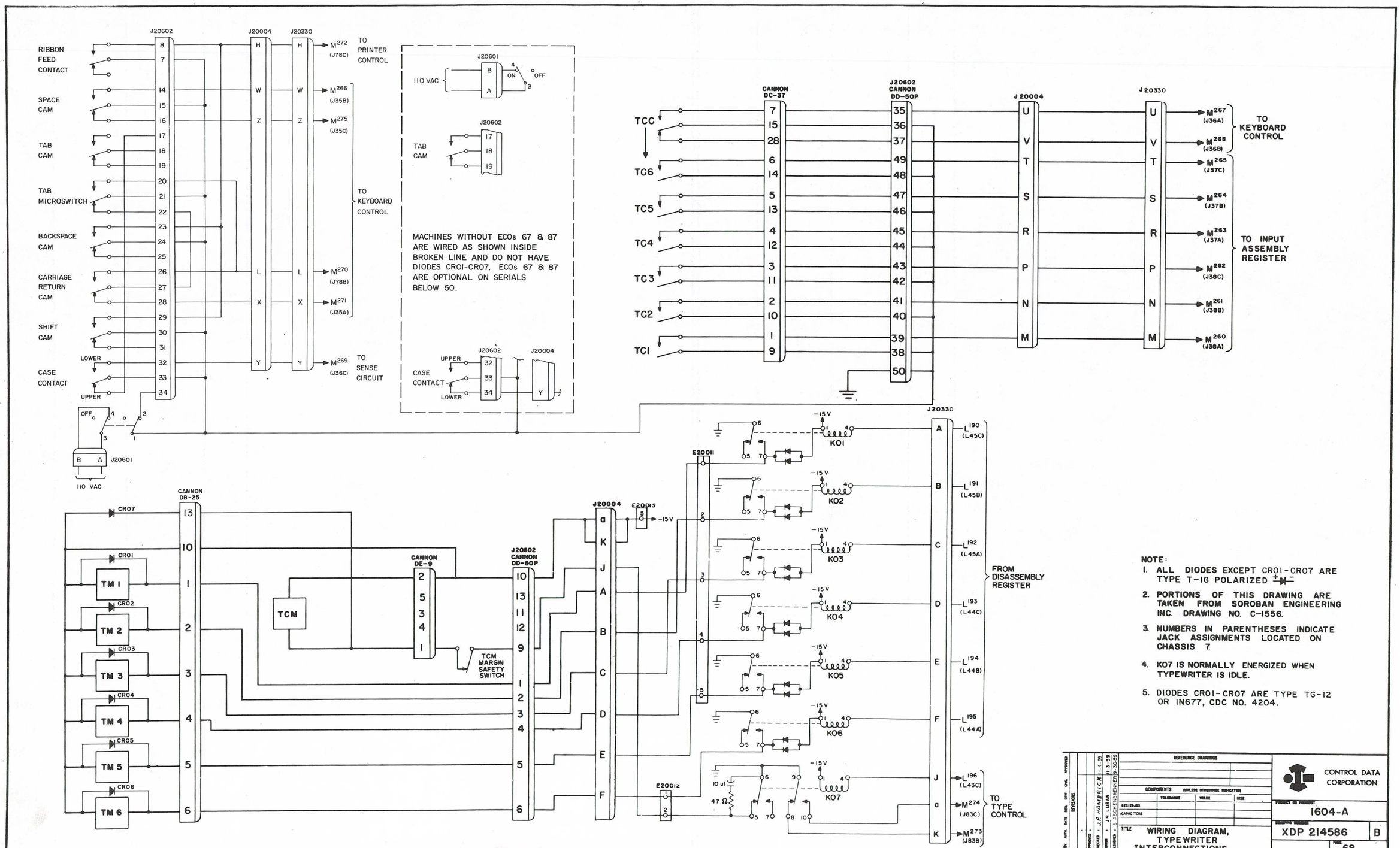

NOTE:

1. ALL DIODES EXCEPT CR01-CR07 ARE TYPE T-1G POLARIZED
2. PORTIONS OF THIS DRAWING ARE TAKEN FROM SOROBAN ENGINEERING INC. DRAWING NO. C-1556.
3. NUMBERS IN PARENTHESES INDICATE JACK ASSIGNMENTS LOCATED ON CHASSIS 7.
4. K07 IS NORMALLY ENERGIZED WHEN TYPEWRITER IS IDLE.
5. DIODES CR01-CR07 ARE TYPE TG-12 OR IN677, CDC NO. 4204.

REFERENCE DRAWINGS

COMPONENTS (UNLESS OTHERWISE INDICATED)

	TOLERANCE	VALUE	SIZE
RESISTORS			
CAPACITORS			

REVISIONS

APPROVED: J.P. HAMBRICK 11-4-59
CHECKED: J.R. LUBAN 11-3-59
DRAWN: S. ASCHENBRENNER 9-30-59
DESIGNED:

TITLE: WIRING DIAGRAM, TYPEWRITER INTERCONNECTIONS

CONTROL DATA CORPORATION

PROJECT OR PRODUCT: 1604-A

DRAWING NUMBER: XDP 214586 B

PAGE: 68

TERM	LOCATION	PAGE	QUAD.	DEFINITION
K913	7L75C	66	0	Select Punch
K914	7L76	66	0	Assembly Mode
K990	7K43A	67	3	Typewriter Control
K993	7K44	67	3	
J998	7M69B	67	3	
J999	7K60	67	1	Typewriter 00 Code

TERM	LOCATION	PAGE	QUAD.	DEFINITION

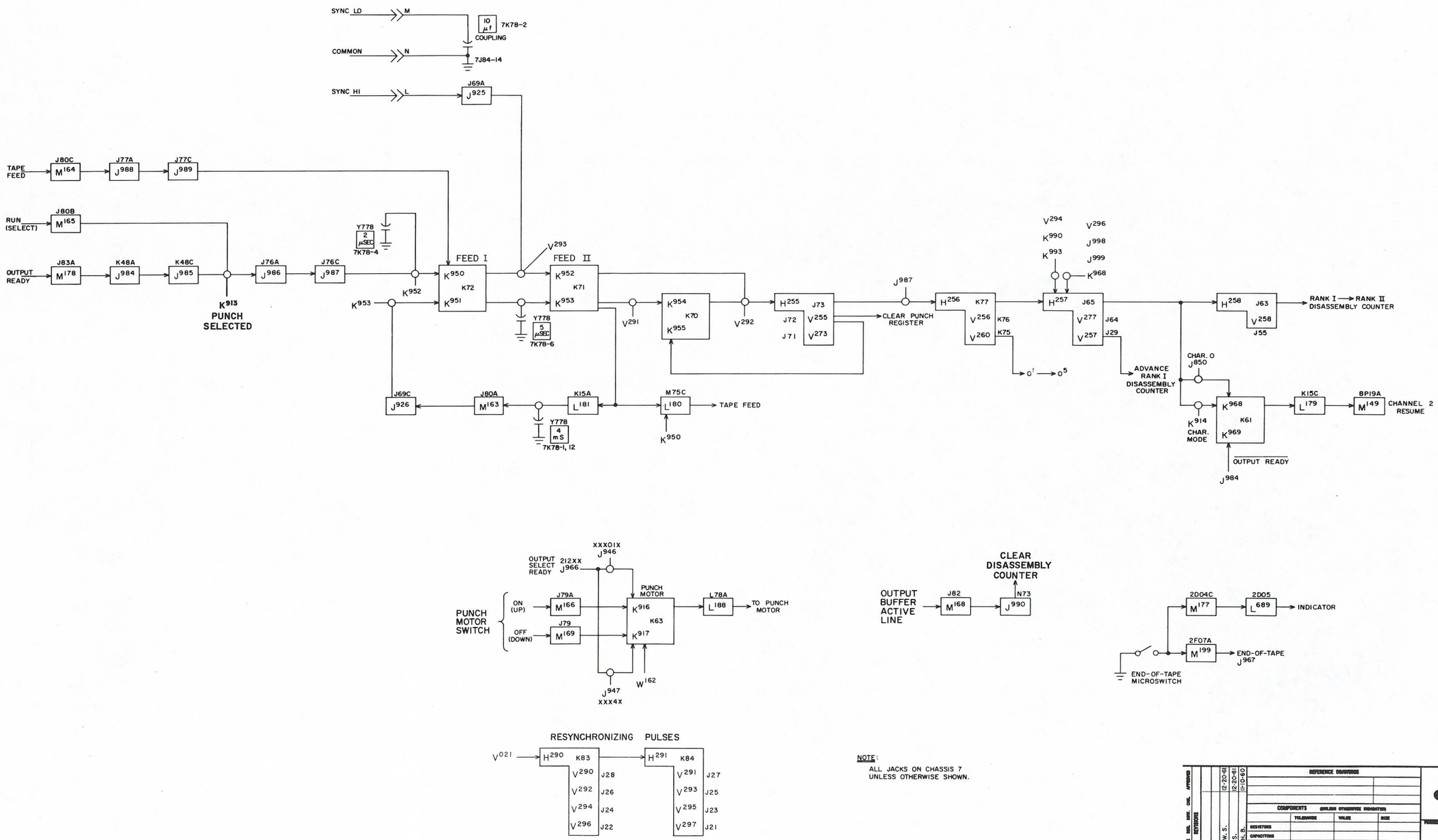

NOTE:
ALL JACKS ON CHASSIS 7 UNLESS OTHERWISE SHOWN.

REV.	AUTH.	DATE	REQ.	DWG.	CHK.	APPROVED
REVISIONS						
APPROVED	-					
CHECKED	-	D. W. S.				12-20-61
DRAWN	-	E. S.				12-20-61
DESIGNED	-	O. H. B.				11-10-60

REFERENCE DRAWINGS

COMPONENTS (UNLESS OTHERWISE INDICATED)

	TOLERANCE	VALUE	SIZE
RESISTORS			
CAPACITORS			

TITLE
PAPER TAPE
PUNCH CONTROL (BRPE-II)

CONTROL DATA CORPORATION

PROJECT OR PRODUCT
1604-A

DRAWING NUMBER
XDP 214518

REV.
E

PAGE
69

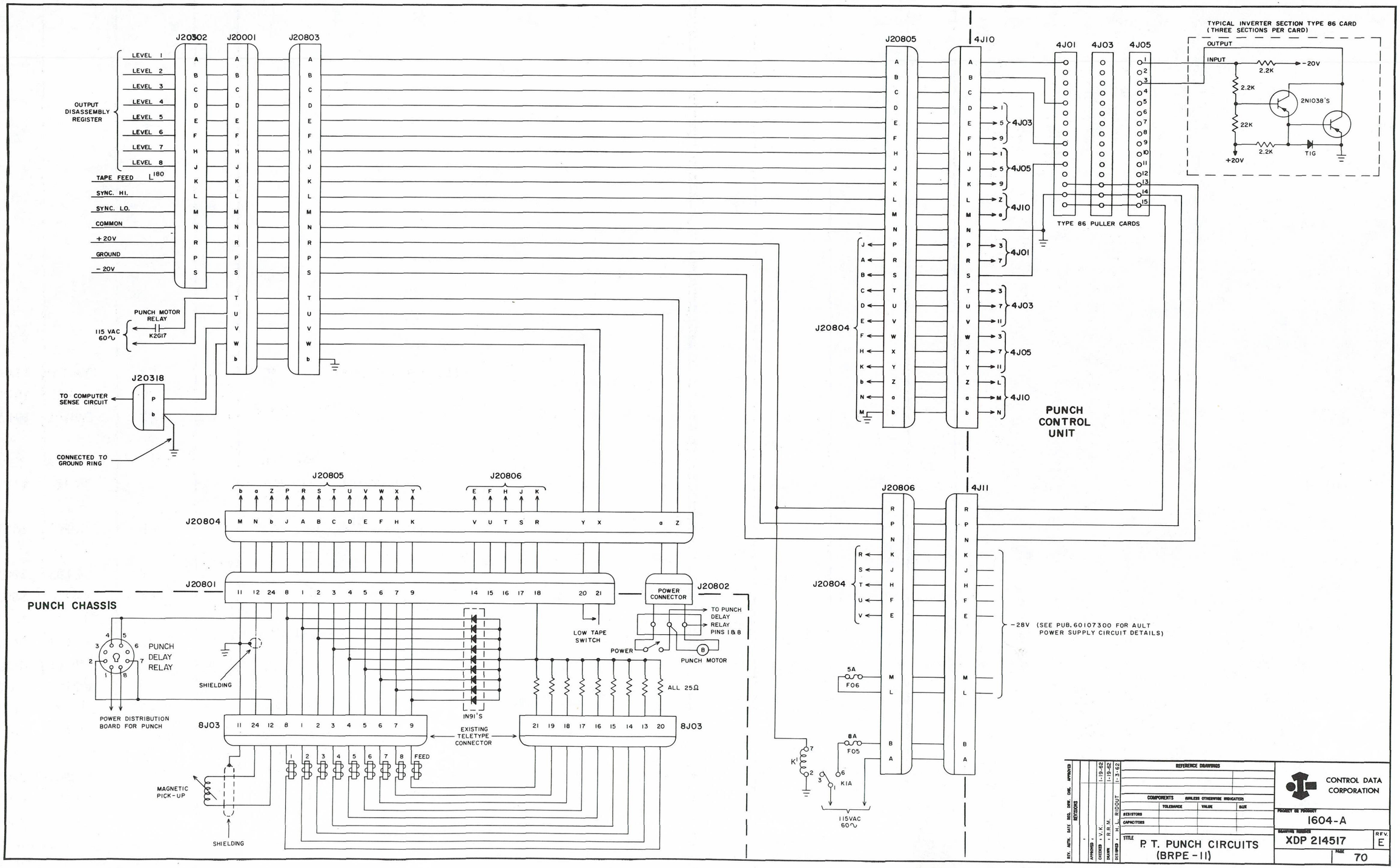

J20302
J20001
J20803
OUTPUT DISASSEMBLY REGISTER
LEVEL 1
LEVEL 2
LEVEL 3
LEVEL 4
LEVEL 5
LEVEL 6
LEVEL 7
LEVEL 8
TAPE FEED
SYNC. HI.
SYNC. LO.
COMMON
+20V
GROUND
-20V
PUNCH MOTOR RELAY
115 VAC 60~
K2G17
J20318
TO COMPUTER SENSE CIRCUIT
CONNECTED TO GROUND RING
J20805
J20806
J20804
J20801
PUNCH CHASSIS
POWER CONNECTOR
J20802
TO PUNCH DELAY RELAY PINS 1 & 8
POWER
PUNCH MOTOR
LOW TAPE SWITCH
PUNCH DELAY RELAY
SHIELDING
POWER DISTRIBUTION BOARD FOR PUNCH
IN91'S
ALL 25Ω
8J03
EXISTING TELETYPE CONNECTOR
FEED
MAGNETIC PICK-UP
SHIELDING
J20805
4J10
4J01
4J03
4J05
TYPE 86 PULLER CARDS
TYPICAL INVERTER SECTION TYPE 86 CARD (THREE SECTIONS PER CARD)
OUTPUT
INPUT
2.2K
-20V
2N1038'S
22K
+20V
T1G
J20804
PUNCH CONTROL UNIT
J20806
4J11
-28V (SEE PUB. 60107300 FOR AULT POWER SUPPLY CIRCUIT DETAILS)
5A
F06
8A
F05
K1A
115VAC 60~
REFERENCE DRAWINGS
COMPONENTS (UNLESS OTHERWISE INDICATED)
TOLERANCE
VALUE
SIZE
RESISTORS
CAPACITORS
REV. AUTH. DATE REQ. DRW. CHK. APPROVED
REVISIONS
APPROVED
CHECKED V.K. 1-19-62
DRAWN R.R.M. 1-19-62
DESIGNED H.L. RIDOUT 1-3-62
TITLE P. T. PUNCH CIRCUITS (BRPE-11)
CONTROL DATA CORPORATION
PROJECT OR PRODUCT 1604-A
DRAWING NUMBER XDP 214517
REV. E
PAGE 70

TERM	LOCATION	PAGE	QUAD.	DEFINITION
K086	7H81	26	3	Auto Load Logic (Serials 24, 25, 31, 32, 37 & 44 only)
K086	7J84A	26	3	Auto Load Logic
K088	7J84A	26	3	Auto Load Logic (Serials 24, 25, 31, 32, 37 & 44 only)
K902	7L63A	66	1	$\overline{\text{Select Keyboard}}$
K904	7L61A	66	1	$\overline{\text{End of Tape}}$
K911	7L59C	66	0	Select Reader
K972	7J15A	64	2	Rank II Input Assembly Counter
K973	7J15C	64	2	
K976	7J14A	64	2	
K977	7J14C	64	2	
K980	7J12A	64	2	
K981	7J12C	64	2	
R907	3M63	36	2	$CCR_L = CCR_U$
V279	7M09	67	0	Typewriter Control
V459	6N62	17.1	0	Aux. Seq.
W161	7J39C	25	0	External M. C.
W162	7K50	25	0	
W821	6O36C	45	1	Aux. Ref. Designator = 001

TERM	LOCATION	PAGE	QUAD.	DEFINITION

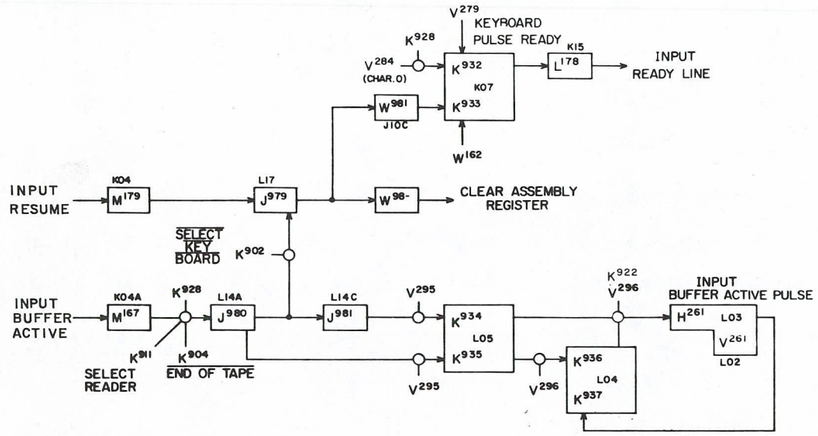

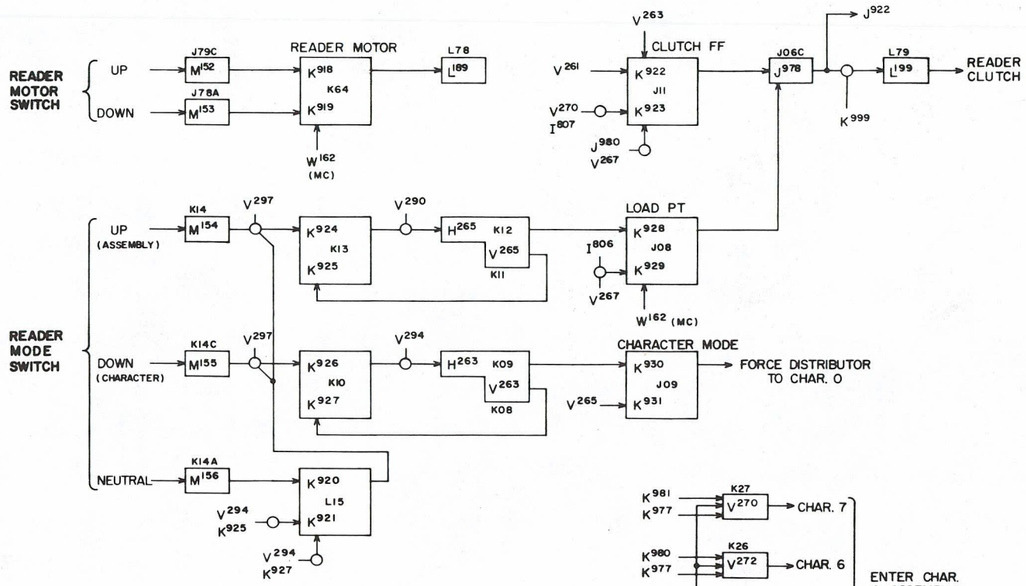

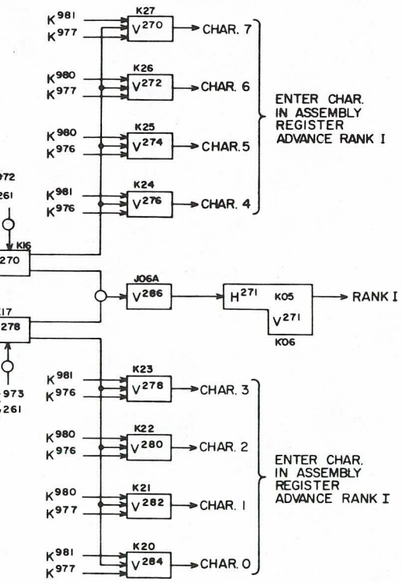

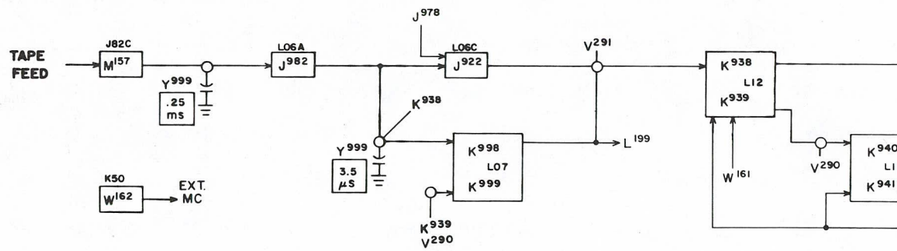

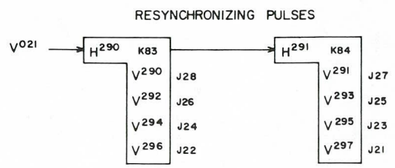

NOTES:
1. ALL JACKS ON CHASSIS 7 UNLESS OTHERWISE SHOWN

REV.	APPR.	DATE	ENGR.	DRFT.	CHK.	APPROVED
REVISIONS						
APPROVED	-					3-23-60
CHECKED	-	D.W.S.				3-23-60
DRAWN	-	R.R.M.				
DESIGNED	-	S. ASCHENBRENNER				1-6-60

REFERENCE DRAWINGS

CONTROL DATA CORPORATION

PROJECT OR PRODUCT: 1604-A

DRAWING NUMBER: XDP 214516 REV. E

TITLE: PAPER TAPE READER

PAGE 71

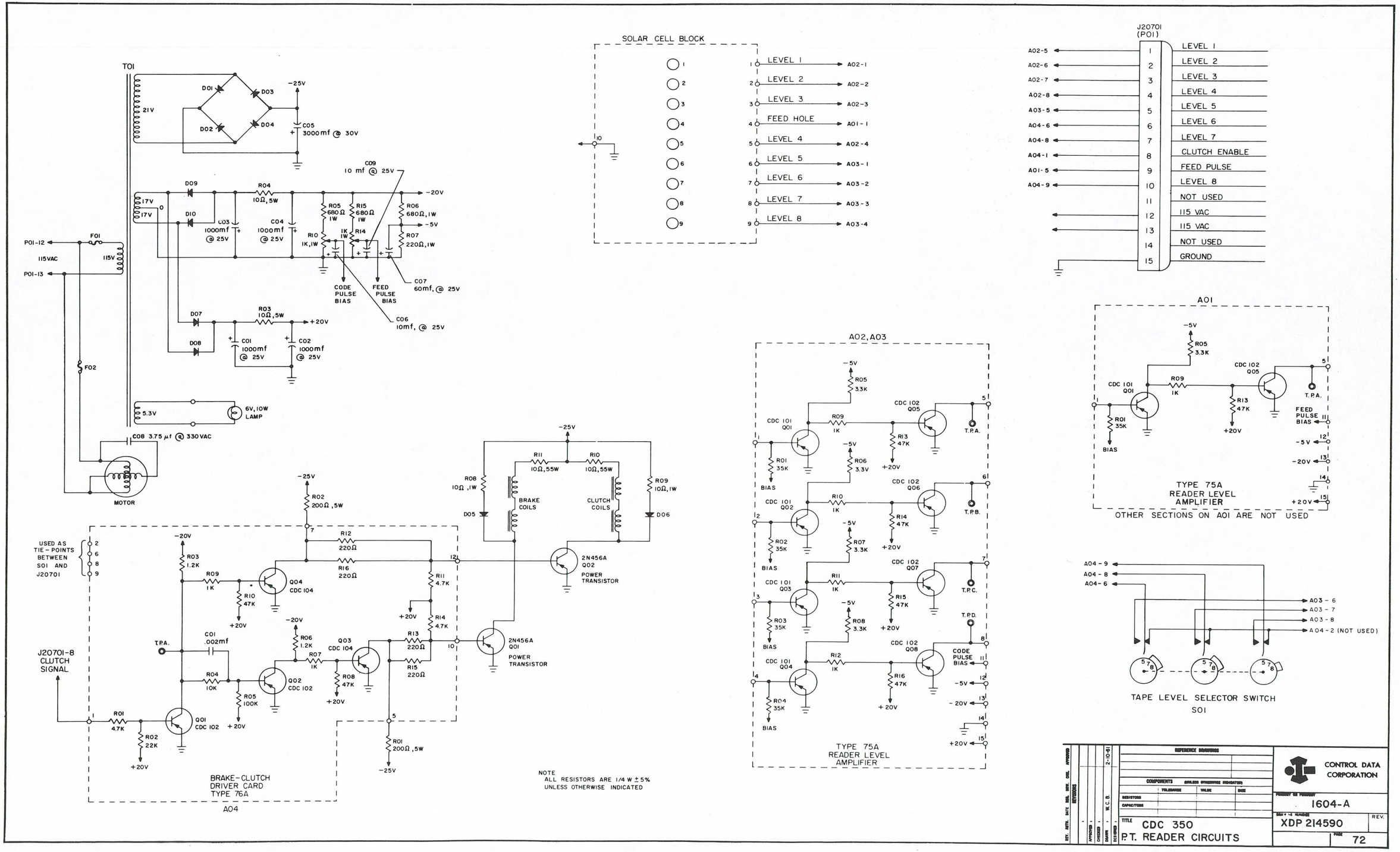

SOLAR CELL BLOCK
LEVEL 1
LEVEL 2
LEVEL 3
FEED HOLE
LEVEL 4
LEVEL 5
LEVEL 6
LEVEL 7
LEVEL 8
A02-1
A02-2
A02-3
A01-1
A02-4
A03-1
A03-2
A03-3
A03-4
J20701 (P01)
LEVEL 1
LEVEL 2
LEVEL 3
LEVEL 4
LEVEL 5
LEVEL 6
LEVEL 7
CLUTCH ENABLE
FEED PULSE
LEVEL 8
NOT USED
115 VAC
115 VAC
NOT USED
GROUND
A02-5
A02-6
A02-7
A02-8
A03-5
A04-6
A04-8
A04-1
A01-5
A04-9
T01
21V
D01
D02
D03
D04
-25V
C05 3000mf @ 30V
C09 10 mf @ 25V
-20V
-5V
D09
D10
R04 10Ω, 5W
17V
17V
C03 1000mf @ 25V
C04 1000mf @ 25V
R05 680Ω 1W
R15 680Ω 1W
R06 680Ω, 1W
R10 1K, 1W
R14 1K 1W
R07 220Ω, 1W
CODE PULSE BIAS
FEED PULSE BIAS
C07 60mf, @ 25V
C06 10mf, @ 25V
P01-12
P01-13
F01
115VAC
115V
D07
D08
R03 10Ω, 5W
+20V
C01 1000mf @ 25V
C02 1000mf @ 25V
F02
5.3V
6V, 10W LAMP
C08 3.75 μf @ 330VAC
MOTOR
A01
-5V
R05 3.3K
CDC 101 Q01
R09 1K
CDC 102 Q05
R13 47K
T.P.A.
FEED PULSE BIAS
R01 35K
BIAS
+20V
-5V
-20V
+20V
TYPE 75A READER LEVEL AMPLIFIER
OTHER SECTIONS ON A01 ARE NOT USED
A02, A03
R05 3.3K
CDC 101 Q01
R09 1K
CDC 102 Q05
R13 47K
T.P.A.
R01 35K
BIAS
R06 3.3V
CDC 101 Q02
R10 1K
CDC 102 Q06
R14 47K
T.P.B.
R02 35K
R07 3.3K
CDC 101 Q03
R11 1K
CDC 102 Q07
R15 47K
T.P.C.
R03 35K
R08 3.3K
T.P.D.
CDC 101 Q04
R12 1K
CDC 102 Q08
R16 47K
CODE PULSE BIAS
R04 35K
-5V
-20V
+20V
TYPE 75A READER LEVEL AMPLIFIER
A04-9
A04-8
A04-6
A03-6
A03-7
A03-8
A04-2 (NOT USED)
TAPE LEVEL SELECTOR SWITCH
S01
-25V
R02 200Ω, 5W
R11 10Ω, 55W
R10 10Ω, 55W
R08 10Ω, 1W
R09 10Ω, 1W
D05
D06
BRAKE COILS
CLUTCH COILS
USED AS TIE-POINTS BETWEEN S01 AND J20701
R12 220Ω
R16 220Ω
R03 1.2K
R09 1K
R10 47K
Q04 CDC 104
R11 4.7K
R14 4.7K
2N456A Q02 POWER TRANSISTOR
T.P.A.
C01 .002mf
R06 1.2K
R07 1K
Q03 CDC 104
R13 220Ω
R15 220Ω
2N456A Q01 POWER TRANSISTOR
J20701-8 CLUTCH SIGNAL
R04 10K
R05 100K
Q02 CDC 102
R08 47K
R01 4.7K
R02 22K
Q01 CDC 102
R01 200Ω, 5W
BRAKE-CLUTCH DRIVER CARD TYPE 76A
A04
NOTE
ALL RESISTORS ARE 1/4 W ± 5%
UNLESS OTHERWISE INDICATED
REFERENCE DRAWINGS
COMPONENTS (UNLESS OTHERWISE INDICATED)
TOLERANCE
VALUE
SIZE
RESISTORS
CAPACITORS
REV. AUTH. DATE REQ. DRW. CHK. APPROVED
REVISIONS
APPROVED
CHECKED
DRAWN W.C.B.
DESIGNED 2-10-61
TITLE CDC 350
P.T. READER CIRCUITS
CONTROL DATA CORPORATION
PROJECT OR PRODUCT 1604-A
DRAWING NUMBER XDP 214590
REV.
PAGE 72

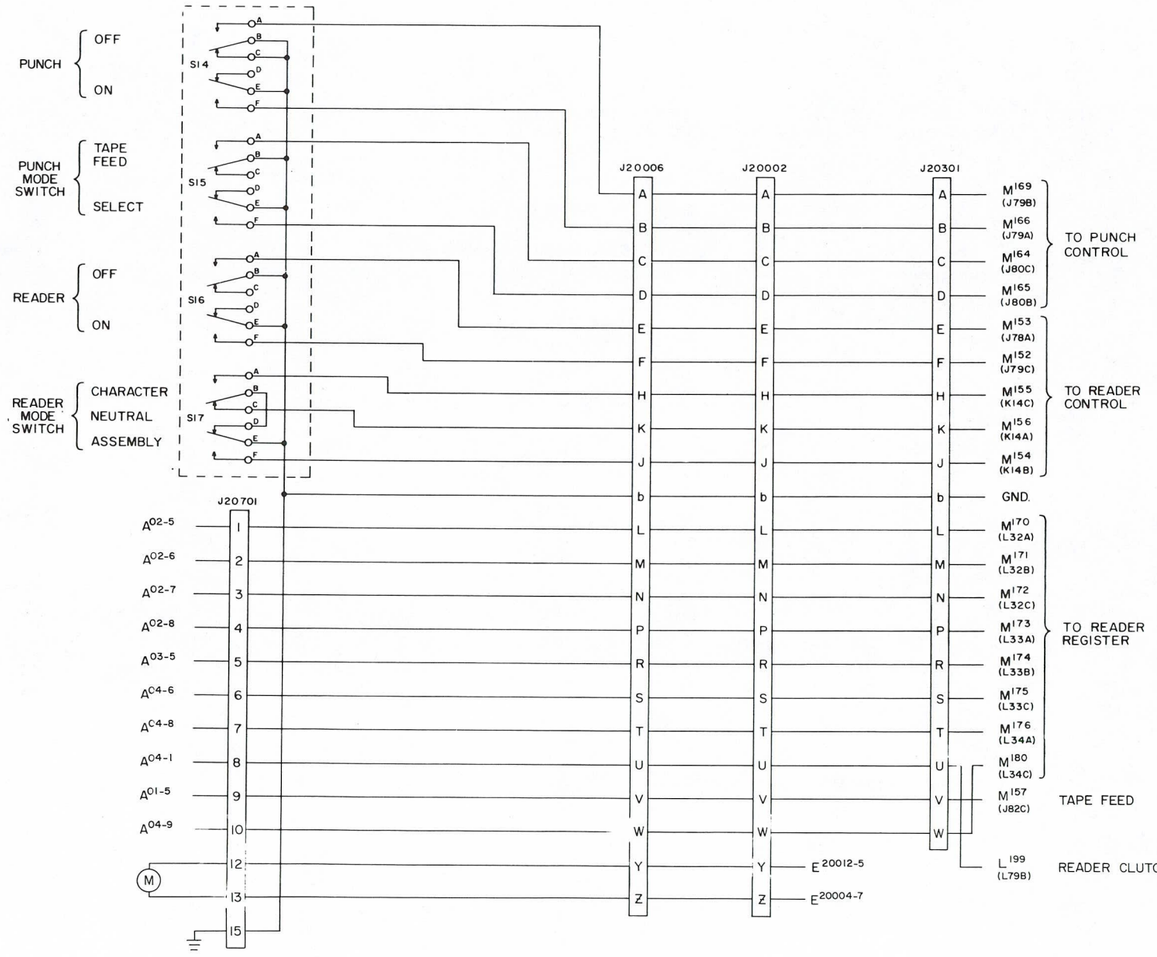

REVISIONS	
APPROVED	
CHECKED	D. SWEDBERG
DRAWN	R. MILLER
DESIGNED	M. HUDALLA
REFERENCE DRAWINGS	
COMPONENTS	UNLESS OTHERWISE INDICATED
TOLERANCE	VALUE / SIZE
RESISTORS	
CAPACITORS	
TITLE	P.T. READER AND PUNCH MANUAL CONTROLS
CONTROL DATA CORPORATION	
PROJECT OR PRODUCT	1604-A
DRAWING NUMBER	XDP 214585
PAGE	73

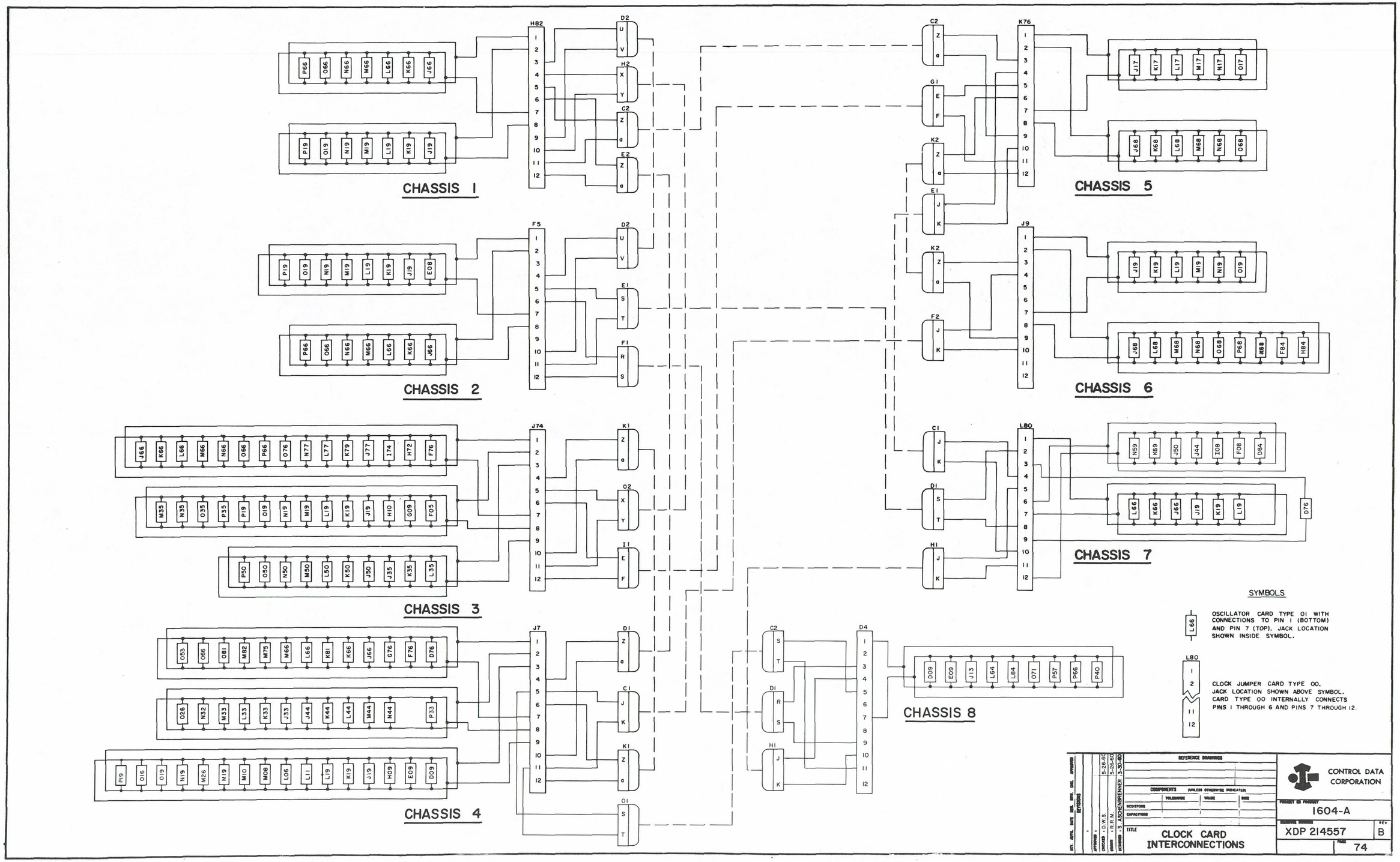
CHASSIS 1
CHASSIS 2
CHASSIS 3
CHASSIS 4
CHASSIS 5
CHASSIS 6
CHASSIS 7
CHASSIS 8
SYMBOLS
OSCILLATOR CARD TYPE 01 WITH CONNECTIONS TO PIN 1 (BOTTOM) AND PIN 7 (TOP). JACK LOCATION SHOWN INSIDE SYMBOL.
CLOCK JUMPER CARD TYPE 00. JACK LOCATION SHOWN ABOVE SYMBOL. CARD TYPE 00 INTERNALLY CONNECTS PINS 1 THROUGH 6 AND PINS 7 THROUGH 12.
REFERENCE DRAWINGS
COMPONENTS (UNLESS OTHERWISE INDICATED)
TOLERANCE
VALUE
SIZE
RESISTORS
CAPACITORS
TITLE
CLOCK CARD INTERCONNECTIONS
CONTROL DATA CORPORATION
PRODUCT OR PROJECT
1604-A
DRAWING NUMBER
XDP 214557
REV
B
PAGE
74

POWER SEQUENCING

STEP	ACTION
1. PRESS **POWER ON** BUTTON ON 1604-A CONSOLE.	60 CYCLE LINE MAGNETIC CONTACTOR ENERGIZED.
A. MAGNETIC CONTACTOR CONTACTS CLOSE.	HOLDING CIRCUIT COMPLETED. 60 CYCLE POWER TO BREAKER PANEL. TIME DELAY RELAY IN 1604-A CONSOLE ENERGIZED.
B. TIME DELAY RELAY CONTACTS 3-5 AND 4-6 CLOSE; CONTACT C-NC OPENS.	CONTACT 4-6 ENERGIZES SELECTED MG START CONTACTOR IN MG CONTROL CABINET.
C. MG START CONTACTOR CONTACTS CLOSE.	60 CYCLE POWER TO MG. 400 CYCLE POWER TO BREAKER PANEL.
2. INTERLOCK CIRCUIT OPENED.	TIME DELAY RELAY DE-ENERGIZED.
A. CONTACT C-NC CLOSES.	BUZZER SOUNDS FOR 3 MINUTES OR UNTIL INTERLOCK CIRCUIT IS CLOSED.
B. AFTER 3 MINUTES CONTACTS 3-5 AND 4-6 OPEN.	CONTACT 4-6 DE-ENERGIZES MG START CONTACTOR. CONTACT 3-5 OPENS BUZZER CIRCUIT.
C. MG START CONTACTOR CONTACTS OPEN.	60 CYCLE POWER TO MG REMOVED 400 CYCLE TO BREAKER PANEL REMOVED.
3. INTERLOCK CIRCUIT CLOSED.	SEE STEPS 1B AND 1C.
4. PRESS **POWER OFF** BUTTON ON 1604 CONSOLE.	60 CYCLE LINE MAGNETIC CONTACTOR DE-ENERGIZED.
A. 60 CYCLE LINE MAGNETIC CONTACTOR CONTACTS OPEN.	60 CYCLE POWER TO BREAKER PANEL REMOVED. MG START CONTACTOR DE-ENERGIZED.
B. MG START CONTACTOR CONTACTS OPEN.	60 CYCLE POWER TO MG REMOVED. 400 CYCLE POWER TO BREAKER PANEL REMOVED.

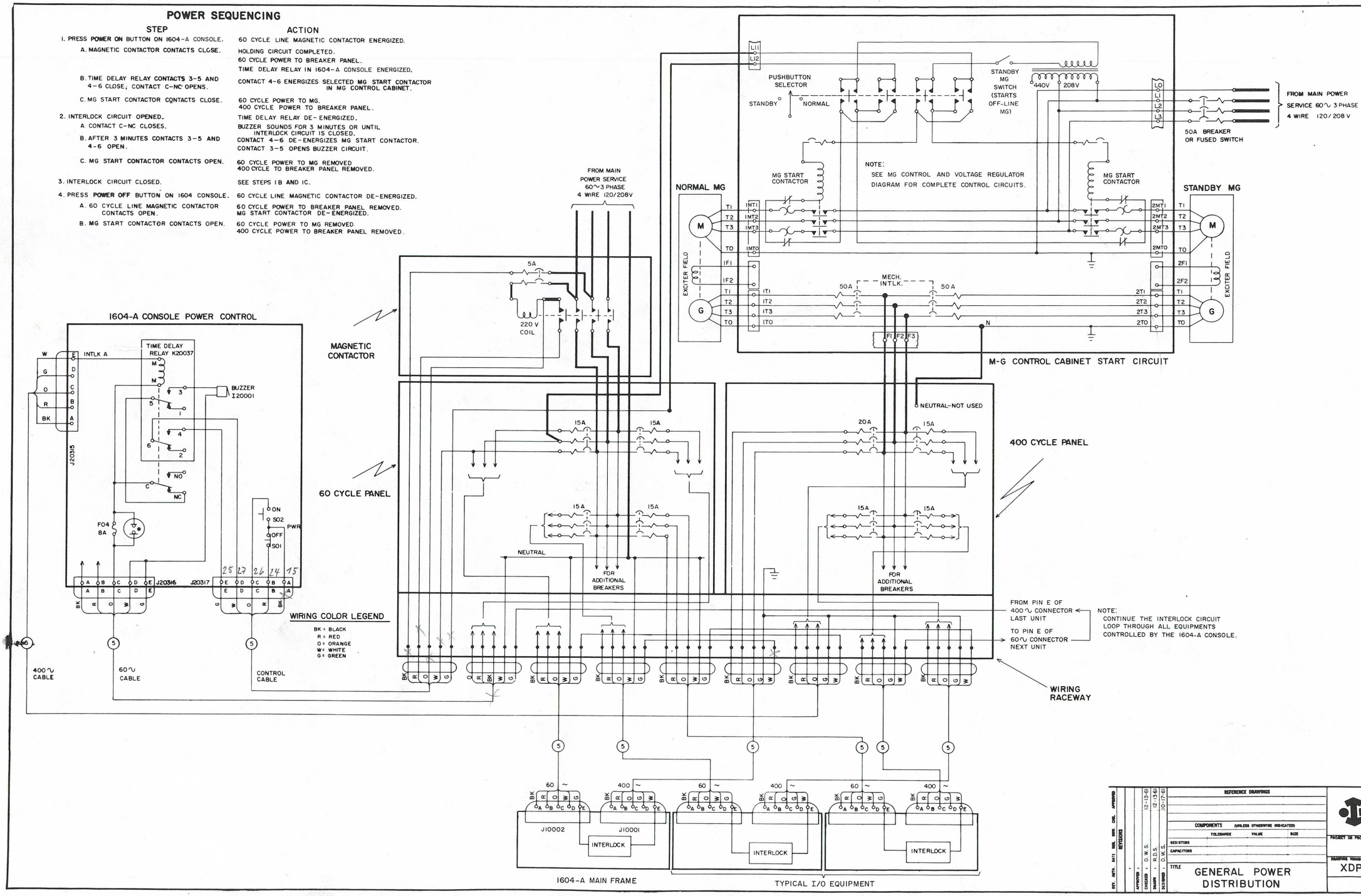

REFERENCE DRAWINGS	
COMPONENTS (UNLESS OTHERWISE INDICATED)	TOLERANCE / VALUE / SIZE
RESISTORS	
CAPACITORS	

REVISIONS	APPROVED	CHECKED	DRAWN	DESIGNED
-	-	D.W.S. 12-13-61	R.C.S. 12-13-61	D.W.S. 10-17-61

CONTROL DATA CORPORATION

PROJECT OR PRODUCT: 1604-A

DRAWING NUMBER: XDP 214567 "E"

PAGE: 75.0

TITLE: GENERAL POWER DISTRIBUTION

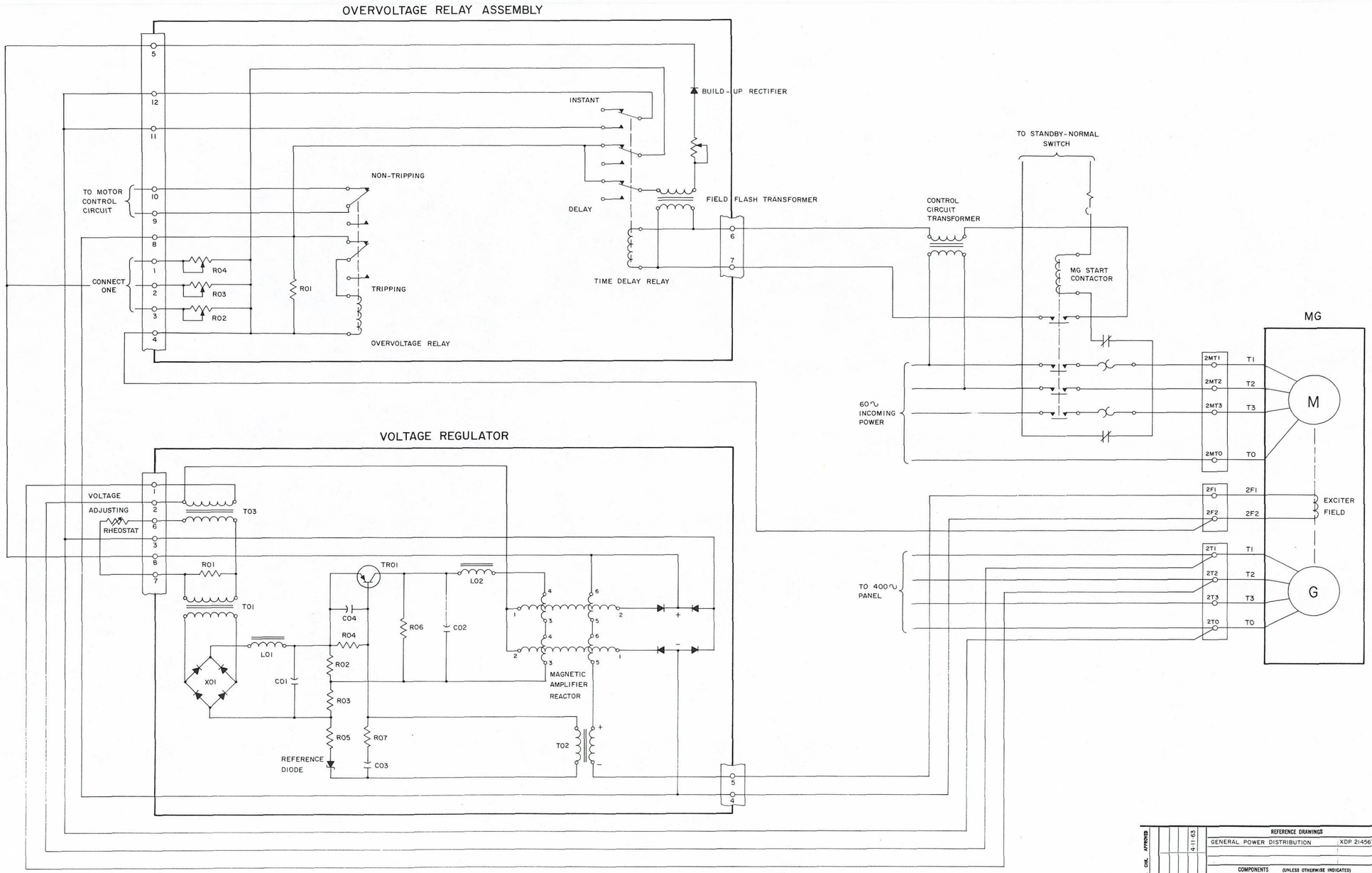

REV.	AUTH.	DATE	REQ.	DRW.	CHK.	APPROVED
REVISIONS						
APPROVED						
CHECKED						
DRAWN	MAN	4-11-63				
DESIGNED						

REFERENCE DRAWINGS

GENERAL POWER DISTRIBUTION	XDP 214567

COMPONENTS (UNLESS OTHERWISE INDICATED)

	TOLERANCE	VALUE	SIZE
RESISTORS			
CAPACITORS			

TITLE MG CONTROL & VOLTAGE REGULATOR CIRCUITS

CONTROL DATA CORPORATION

PROJECT OR PRODUCT 1604-A

DRAWING NUMBER XDP 214629

PAGE 75.1

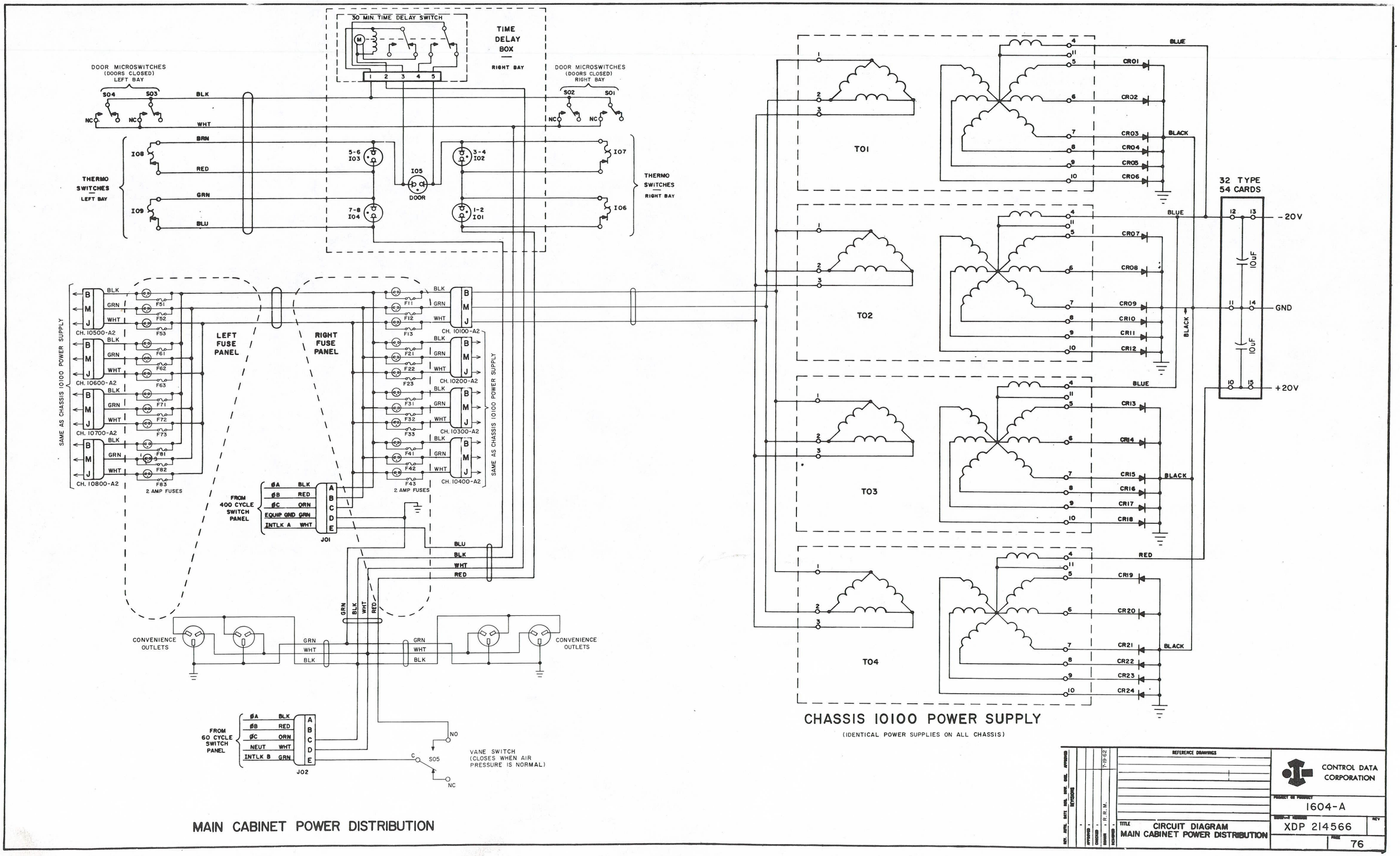

REFERENCE DRAWINGS	CONTROL DATA CORPORATION
	PROJECT OR PRODUCT 1604-A
TITLE CIRCUIT DIAGRAM MAIN CABINET POWER DISTRIBUTION	DRAWING NUMBER XDP 214566
	PAGE 76

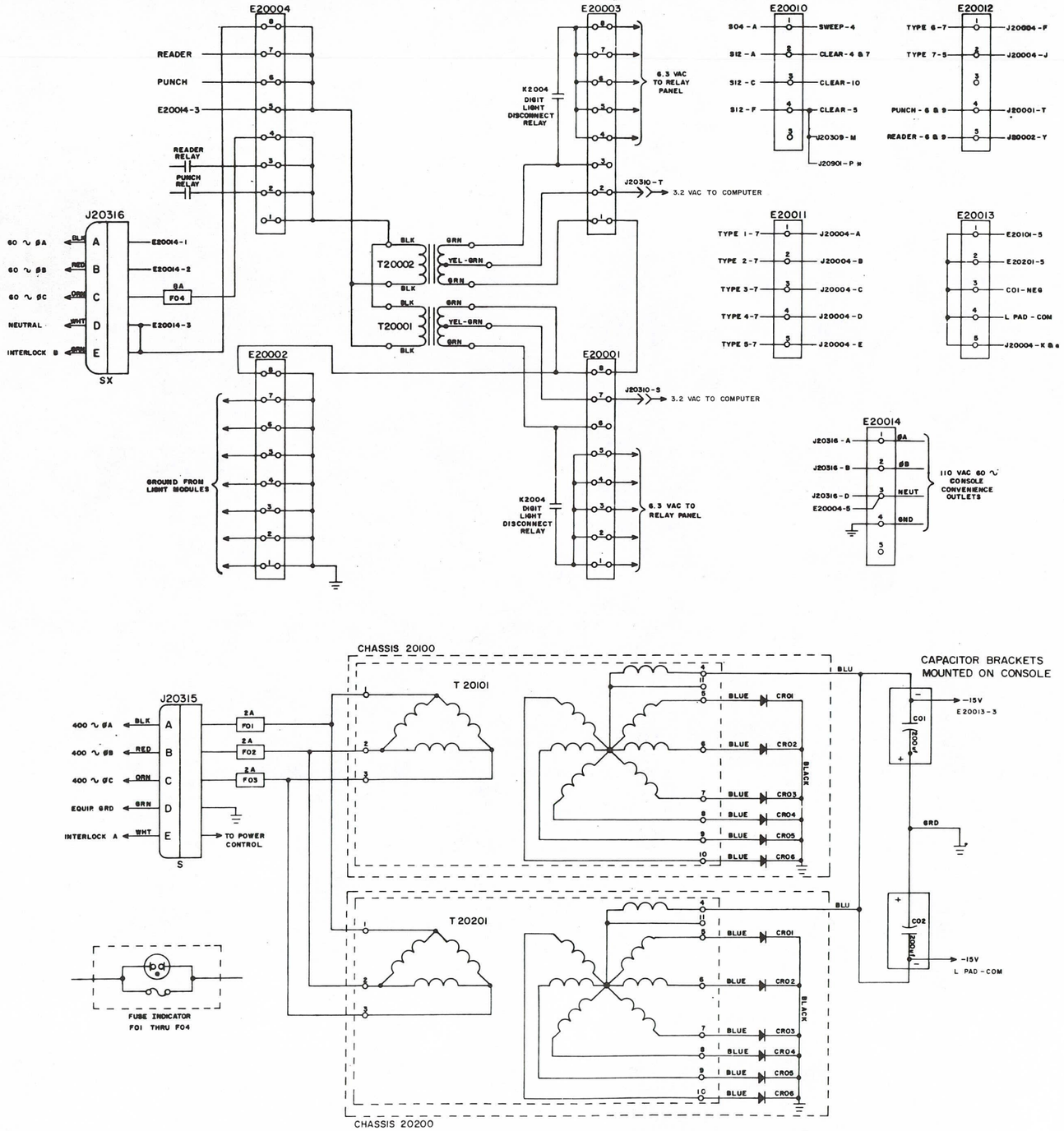

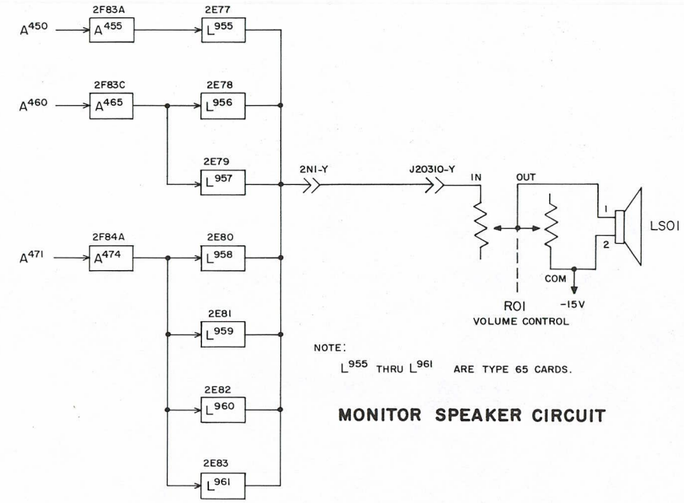

NOTE:
L^{955} THRU L^{961} ARE TYPE 65 CARDS.

MONITOR SPEAKER CIRCUIT

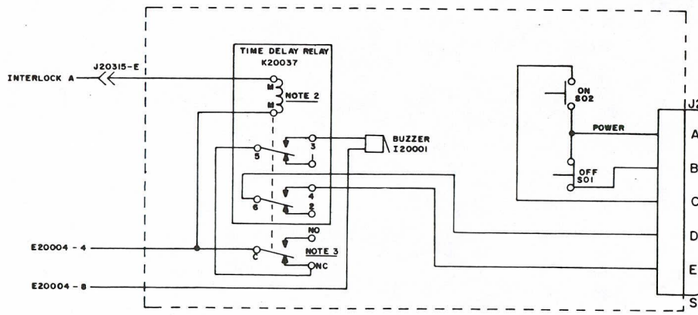

POWER CONTROL

NOTE 1:
CABLING FOR BRPE-11 SHOWN ON PAGE 70.

NOTE 2:
CONTACTS MAKE WHEN COIL IS ENERGIZED. WHEN COIL IS DE-ENERGIZED THERE IS A 3 MINUTE TIME DELAY BEFORE CONTACTS BREAK.

NOTE 3:
SWITCH OPENS WHEN K20037 IS ENERGIZED AND CLOSES (NO TIME DELAY) WHEN K20037 IS DE-ENERGIZED.

REV. APPR. DATE ENG. MFG. ORIG. APPROVED		REFERENCE DRAWINGS	CONTROL DATA CORPORATION
REVISIONS		COMPONENTS (UNLESS OTHERWISE INDICATED)	
APPROVED		TOLERANCE / VALUE / SIZE	PROJECT OR PRODUCT 1604-A
DESIGNED	E.A. BUTENHOFF 6-15-60	RESISTORS	DRAWING NUMBER XDP 214568 REV. A
DRAWN	S. ASCHENBRENER 4-18-60	CAPACITORS	
CHECKED		TITLE CONSOLE POWER DISTRIBUTION	PAGE 77

INDEX REGISTER 1

14 13 12 11 10 9 8 7 6 5 4 3 2 1 0 CLR

INDEX REGISTER 4

14 13 12 11 10 9 8 7 6 5 4 3 2 1 0 CLR

INTERRUPT LOCKOUT (GREEN)	INTERRUPT REQUEST EXT-GREEN INT-RED BOTH-YEL	CHAN 6 ACTIVE (GREEN)	CHAN 5 ACTIVE (GREEN)	CHAN 4 ACTIVE (GREEN)	CHAN 3 ACTIVE (GREEN)	CHAN 2 ACTIVE (GREEN)	CHAN 1 ACTIVE (GREEN)

A REGISTER LEFT

47 46 45 44 43 42 41 40 39 38 37 36 35 34 33 32 31 30 29 28 27 26 25 24

READER READY (GREEN)	PUNCH OUT OF TAPE (RED)	ODD STORAGE FAULT (RED)	EVEN STORAGE FAULT (RED)	DIVIDE FAULT (RED)	SHIFT FAULT (RED)	OVERFLOW FAULT (RED)	EXPONENT FAULT (RED)

A REGISTER RIGHT

23 22 21 20 19 18 17 16 15 14 13 12 11 10 9 8 7 6 5 4 3 2 1 0 CLR

INDEX REGISTER 2

14 13 12 11 10 9 8 7 6 5 4 3 2 1 0 CLR

INDEX REGISTER 5

14 13 12 11 10 9 8 7 6 5 4 3 2 1 0 CLR

							ALARM LIGHT (RED)

Q REGISTER LEFT

47 46 45 44 43 42 41 40 39 38 37 36 35 34 33 32 31 30 29 28 27 26 25 24

					STORAGE NOT BUSY (GREEN)	DEEP END (GREEN)

Q REGISTER RIGHT

23 22 21 20 19 18 17 16 15 14 13 12 11 10 9 8 7 6 5 4 3 2 1 0 CLR

INDEX REGISTER 3

14 13 12 11 10 9 8 7 6 5 4 3 2 1 0 CLR

INDEX REGISTER 6

14 13 12 11 10 9 8 7 6 5 4 3 2 1 0 CLR

RUN 1604 PROGRAMS (RED)				LOWER INST (GREEN)

PROGRAM ADDRESS

14 13 12 11 10 9 8 7 6 5 4 3 2 1 0 CLR

SWEEP (GREEN)	SWEEP (GREEN)	SWEEP (GREEN)

FUNCTION CODE

23 22 21 20 19 18 17 16 15 CLR

EXECUTION ADDRESS

14 13 12 11 10 9 8 7 6 5 4 3 2 1 0 CLR

POWER

(RED) OFF (BLUE) ON

STORAGE MARGIN

TEST MODE

BREAKPOINT

1 2 3 4 5

SELECTIVE JUMPS

1 2 3

SELECTIVE STOPS

1 2 3

START

CLEAR STEP

REV.	AUTH.	DATE	REG.	DRW.	CHK.	APPROVED
	REVISIONS					



CHASSIS 20200
(VIEWED FROM REAR OF CONSOLE)

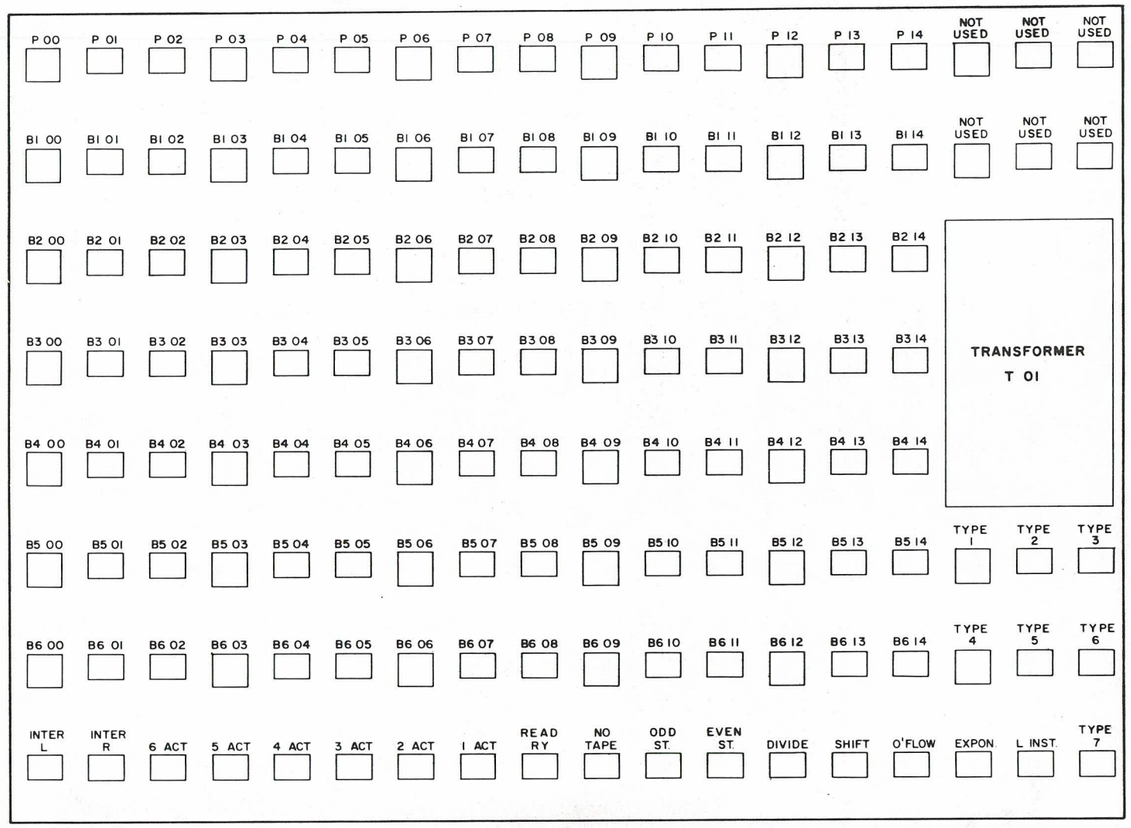

CHASSIS 20100
(VIEWED FROM REAR OF CONSOLE)

TYPICAL RELAY INTERCONNECTIONS

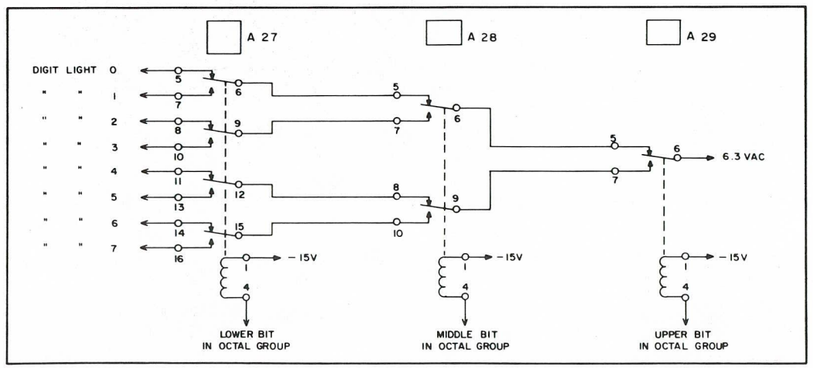

REV. AUTH. DATE REQ. DRW. CHK. APPROVED
REVISIONS
APPROVED
CHECKED
DRAWN
DESIGNED

REFERENCE DRAWINGS

COMPONENTS (UNLESS OTHERWISE INDICATED)

	TOLERANCE	VALUE	SIZE
RESISTORS			
CAPACITORS			

TITLE CONSOLE RELAY CHASSIS MAP

CONTROL DATA CORPORATION

PROJECT OR PRODUCT 1604-A

DRAWING NUMBER XDP 214587 E

PAGE 79

CHASSIS 10100

A2	FUSE PANEL (SEE BELOW)
B1	CH.10300-D2
B2	CH.10400-D2
C1	CH.10600-D2
C2	CH.10500-C2
D1	CH.10600-C2
D2	CH.10200-D2
E1	CH.10300-D1
E2	CH.10400-D1
F1	CH.10700-D2
F2	CH.10700-E1
G1	CH.10800-D2
H1	CH.10300-01
H2	CH.10300-02
I1	CH.10400-K2
J1	CH.10800-H3
J2	CH.10200-J2
K1	CH.10200-K1
K2	CH.10200-K2
L1	CH.10500-C1
L2	CH.10700-I3
M2	J20303
N1	J20304
N2	J20305
01	J20306
02	J20307
P1	J20308

} CONSOLE

CHASSIS 10200

A2	FUSE PANEL (SEE BELOW)
B1	CH.10300-E1
B2	CH.10400-E1
C1	CH.10600-E1
C2	CH.10400-C2
D1	CH.10500-D1
D2	CH.10100-D2
E1	CH.10700-D1
E2	CH.10600-D1
F1	CH.10800-D1
F2	CH.10700-E2
G1	CH.10800-E2
G2	CH.10800-G3
H1	CH.10300-N1
H2	CH.10300-N2
I1	CH.10500-E2
I2	CH.10500-F1
J1	CH.10400-N2
J2	CH.10100-J2
K1	CH.10100-K1
K2	CH.10100-K2
L1	CH.10700-03
M2	J20309
N1	J20310
N2	J20311
01	J20312
02	J20313
P1	J20314

} CONSOLE

CHASSIS 10300

A2	FUSE PANEL (SEE BELOW)
B1	CH.10700-F2
B2	CH.10400-E2
C1	CH.10600-E2
C2	CH.10400-B2
D1	CH.10100-E1
D2	CH.10100-B1
E1	CH.10200-B1
E2	CH.10400-B1
F1	CH.10500-B1
F2	CH.10600-B1
G1	CH.10700-B1
G2	CH.10800-B1
H1	CH.10500-H1
H2	CH.10500-H2
I1	CH.10500-G1
I2	CH.10400-I2
J1	CH.10400-J1
J2	CH.10400-J2
K1 K3	CH.10400-J3 CH.10400-K1
K2	CH.10600-G2
L1 L3	CH.10800-E1 CH.10600-H1
L2	CH.10600-H2
M1 M3	CH.10400-M3 CH.10600-I1
M2	CH.10400-M2
N1	CH.10200-H1
N2	CH.10200-H2
01	CH.10100-H1
02	CH.10100-H2
P1	CH.10600-P1

CHASSIS 10400

A2	FUSE PANEL (SEE BELOW)
B1	CH.10300-E2
B2	CH.10300-C2
C1	CH.10600-F2
C2	CH.10200-C2
D1	CH.10100-E2
D2	CH.10100-B2
E1	CH.10200-B2
E2	CH.10300-B2
F1	CH.10500-B2
F2	CH.10600-B2
G1	CH.10700-B2
G2	CH.10800-B2
H1	CH.10500-G2
H2	CH.10700-F1
I1	CH.10500-I1
I2	CH.10300-I2
J1 J3	CH.10300-K3 CH.10300-J1
J2	CH.10300-J2
K1 K3	CH.10800-F2 CH.10300-K1
K2	CH.10100-I1
L1 L3	CH.10800-H2 CH.10600-L1
L2	CH.10600-L2
M1 M3	CH.10300-M3 CH.10600-M1
M2	CH.10300-M2
N1 N3	CH.10500-F2 CH.10600-M2
N2	CH.10200-J1
01 03	CH.10600-03 CH.10800-C2
02	CH.10600-N1
P1	CHJ0700-K3

CHASSIS 10500

A2	FUSE PANEL (SEE BELOW)
B1	CH.10300-F1
B2	CH.10400-F1
C1	CH.10100-L1
C2	CH.10100-C2
D1	CH.10200-D1
D2	CH.10800-I1
E1	CH.10700-C1
E2	CH.10200-I1
F1	CH.10200-I2
F2	CH.10400-N3
G1	CH.10300-I1
G2	CH.10400-H1
H1	CH.10300-H1
H2	CH.10300-H2
I1	CH.10400-I1
I2	CH.10600-I2
J1	CH.10600-J1
J2	CH.10600-J2
K1	CH.10600-K1
K2	CH.10600-K2
L1	J20318
L2	J20319
M1	J20320
M2	J20321
N1	J20322
N2	J20323
01	J20324
02	J20325
P1	J20326

} CONSOLE

CHASSIS 10600

A2	FUSE PANEL (SEE BELOW)
B1	CH.10300-F2
B2	CH.10400-F2
C1	CH.10800-I2
C2	CH.10100-D1
D1	CH.10200-E2
D2	CH.10100-C1
E1	CH.10200-C1
E2	CH.10300-C1
F1	CH.10700-C2
F2	CH.10400-C1
G1	CH.10800-C1
G2	CH.10300-K2
H1 H3	CH.10800-I3 CH.10300-L1
H2	CH.10300-L2
I1 I3	CH.10700-H3 CH.10300-M1
I2	CH.10500-I2
J1 J3	CH.10800-K3 CH.10500-J1
J2	CH.10500-J2
K1 K3	CH.10800-L3 CH.10500-K1
K2	CH.10500-K2
L1 L3	CH.10700-L3 CH.10400-L1
L2	CH.10400-L2
M1 M3	CH.10800-M3 CH.10400-M1
M2	CH.10400-N1
N1 N3	CH.10400-02 CH.10800-N3
N2	J20327
01 03	J20328 J20329
02	CH.10400-03
P1	CH.10300-P1

} CONSOLE

CHASSIS 10700

A2	FUSE PANEL (SEE BELOW)
B1	CH.10300-G1
B2	CH.10400-G1
C1	CH.10500-E1
C2	CH.10600-F1
D1	CH.10200-E1
D2	CH.10100-F1
E1	CH.10100-F2
E2	CH.10200-F2
F1	CH.10400-H2
F2	CH.10300-B1
G1	CH.10800-G1
G2	CH.10800-G2 CH.10800-H1
H1 H3	CH.10600-I3
H2	J20301 J20302
I1 I3	J20330
I2	CH.10100-L2
J1 J3	CH.10800-J1 CH.10800-J3
J2	A B
K1 K3	CHAN. 1
K2	C CH.10400-P1
L1 L3	CH.10600-L3
L2	A B C
M1 M3	CHAN. 3 CH.10800-F1
M2	A B
N1 N3	CHAN. 5
N2	C CH.10800-03
01 03	CH.10200-L1
02	A B
P1	CHAN. 7 C

} CONSOLE

CHASSIS 10800

A2	FUSE PANEL (SEE BELOW)
B1	CH.10300-G2
B2	CH.10400-G2
C1	CH.10600-G1
C2	CH.10400-01
D1	CH.10200-F1
D2	CH.10100-G1
E1	CH.10300-L3
E2	CH.10200-G1
F1	CH.10700-M3
F2	CH.10400-K3
G1 G3	CH.10700-G1 CH.10200-G2
G2	CH.10700-G2
H1 H3	CH.10700-H1 CH.10100-J1
H2	CH.10400-L3
I1 I3	CH.10600-H3 CH.10500-D2
I2	CH.10600-C1
J1 J3	CH.10700-J3 CH.10700-J1
J2	D E
K1 K3	CHAN. 2 F
K2	CH.10600-J3
L1 L3	CH. 10600-K3
L2	D E F
M1 M3	CHAN. 4 CH.10600-M3
M2	D E
N1 N3	CHAN. 6 F
N2	CH.10600-N3
01 03	CH.10700-N3
02	D E
P1	CHAN. 7 F

CH.10100-A2
CH.10200-A2
CH.10300-A2
CH.10400-A2

1604-A CABINET FUSE PANEL
(SEE PAGE 76)

1604-A CABINET BOTTOM CENTER OF FRAME — J02

TO 60 ∿ POWER DISTRIBUTION PANEL

CH.10500-A2
CH.10600-A2
CH.10700-A2
CH.10800-A2

1604-A CABINET FUSE PANEL
(SEE PAGE 76)

J01

TO 400 ∿ POWER DISTRIBUTION PANEL

NOTE:
SEE FOLLOWING PAGES FOR PIN ASSIGNMENTS.

REV.	NOTE, DATE, SIG.	REVISIONS
APPROVED		
CHECKED		
DRAWN	J. MAN 7-10-62	
DESIGNED	D. WS 4-9-62	

REFERENCE DRAWINGS

COMPONENTS (UNLESS OTHERWISE INDICATED)

	TOLERANCE	VALUE	SIZE
RESISTORS			
CAPACITORS			

TITLE
MAIN CABINET
CABLE CONNECTIONS

CONTROL DATA CORPORATION

PROJECT OR PRODUCT
1604-A

DRAWING NUMBER
XDP 214592

REV.
G

PAGE
80.0

A2

PIN	
A	
B	T01-T04, pin 1
C	
D	
E	
F	
H	
J	T01-T04, pin 3
K	
L	
M	T01-T04, pin 2
N	
P	
R	

(FUSE PANEL)

B1

PIN	TERM	JACK
A	E101	B01-7
B	E103	B02-7
C	E111	B03-7
D	E113	B04-7
E	E115	B05-7
F	E121	B06-7
H	E123	B07-7
J	E125	B08-7
K	E131	C03-7
L	E133	C04-7
M	E135	C05-7
N	E141	C06-7
P	E143	C07-7
R	E145	C08-7
S	J201	B09-1
T	J211	B09-7
U	J221	B10-1
V	J231	A17-1
W	J241	B11-1
X	J341	A33-1
Y	W218	A38-1
Z	N190	A19-1
a	N191	A26-1
b	GRD	

(3D2)

B2

PIN	TERM	JACK
A	E151	B77-7
B	E153	B78-7
C	E161	B79-7
D	E163	B80-7
E	E165	B81-7
F	E171	B82-7
H	E173	B83-7
J	E175	B84-7
K	E181	C79-7
L	E183	C80-7
M	E185	C81-7
N	E191	C82-7
P	E193	C83-7
R	E195	C84-7
S	J251	B74-1
T	J261	B74-7
U	J271	B75-1
V	J281	A68-1
W	J291	B76-1
X	J361	A52-1
Y	W219	A51-1
Z	N194	A66-1
a	N195	A59-1
b	GRD	

(4D2)

C1

PIN	TERM	JACK
A	P004	E77-1
B	P014	E78-1
C	P024	E79-1
D	P034	E80-1
E	P044	E81-1
F	P054	E82-1
H	P064	E83-1
J	P074	E84-1
K	P084	F78-1
L	P094	F79-1
M	P104	F80-1
N	P114	F81-1
P	P124	F82-1
R	P134	F83-1
S	P144	F84-1
T	I600	A53-12
U	I601	A54-12
V	I602	A55-12
W	I603	A56-12
X	I604	A57-12
Y	I605	A58-12
Z	J810	P31-1
a	P014	E78-7
b	GRD	

(6D2)

C2

PIN	TERM	JACK
A	X000	J10-4
B	X010	K10-4
C	X020	L10-4
D	X030	M10-4
E	X040	N10-4
F	N141	J41-12
H	N141	J41-11
J	N141	J41-10
K	N141	J41-9
L	N141	J41-8
M	N241	P50-12
N	N241	P50-11
P	X120	J55-4
R	X130	K55-4
S	X140	L55-4
T		
U		
V		
W		
X		
Y		
Z	OO CARD	H82-5
a	OO CARD	H82-11
b	GRD	

(5C2)

D1

PIN	TERM	JACK
A	P005	E77-7
B	P015	E76-1
C	P025	E76-7
D	P035	E80-7
E	P045	E81-7
F	P055	E82-7
H	P065	E83-7
J	P075	E84-7
K	P085	F78-7
L	P095	F79-7
M	P105	F80-7
N	P115	F81-7
P	P125	F82-7
R	P135	F83-7
S	P145	F84-7
T	A980	F77-6
U	A982	F77-12
V	Q980	F76-6
W	Q982	F76-12
X	F676	J70-1
Y	F678	H83-1
Z	A992	L65-2
a	W989	H81-12
b	GRD	

(6C2)

D2

PIN	TERM	JACK
A	N171	J39-5
B	N171	J39-6
C	N171	J39-7
D	N171	J39-8
E	N171	J39-9
F	N171	J39-10
H	X061	J35-12
J	X071	K35-12
K	X081	L35-12
L	X091	M35-12
M	X101	N35-12
N	X111	035-12
P	J800	P34-7
R	W989	H81-2
S	A503	M43-10
T	N241	P50-10
U	OO CARD	H82-3
V	OO CARD	H82-9
W	Y155	B73-1
X	A990	L46-3
Y		
Z		
a		
b	GRD	

(2D2)

E1

PIN	TERM	JACK
A	N271	J68-5
B	N271	J68-6
C	N271	J68-7
D	N271	J68-8
E	N271	J68-9
F	N271	J68-10
H	X121	J56-12
J	X131	K56-12
K	X141	L56-12
L	X151	M56-12
M	X161	N56-12
N	X171	056-12
P		
R	W989	H81-3
S	N614	H84-1
T	N624	H84-7
U	Q001	J02-9
V	Q000	J01-10
W	A992	L65-5
X		
Y		
Z		
a		
b	GRD	

(3D1)

E2

PIN	TERM	JACK
A	X180	J80-4
B	X190	K80-4
C	N371	J71-7
D	N371	J71-8
E	N371	J71-9
F	N371	J71-10
H	X181	J81-12
J	X191	K81-12
K	X201	L81-12
L	X211	M81-12
M	X221	N81-12
N	X231	081-12
P		
R		
S		
T		
U		
V		
W		
X	L993	G07-9
Y	J901	P35-1
Z	OO CARD	H82-6
a	OO CARD	H82-12
b	GRD	

(4D1)

F1

PIN	TERM	JACK
A	I601	A54-6
B	I602	A55-6
C	I603	A56-6
D	I604	A57-6
E	I605	A58-6
F	I500	A27-9
H	I501	A28-9
J	I502	A29-9
K	I503	A30-9
L	I504	A31-9
M	I505	A32-9
N	X002	J12-6
P	X012	K12-5
R	X022	L12-5
S	X032	M12-5
T	X042	N12-5
U	X052	012-5
V	X062	J36-5
W	X072	K36-5
X	X082	L36-5
Y	X092	M36-5
Z	X102	N36-5
a	X112	036-5
b	GRD	

(7D2)

F2

PIN	TERM	JACK
A	I150	E06-1
B	I151	E07-1
C	I152	E08-1
D	I153	E09-1
E	I154	F07-1
F	I155	F08-1
H	I156	F09-1
J	I157	E05-1
K	I158	G08-1
L	I159	G09-1
M	I160	H09-1
N	I161	H10-1
P	I162	H11-1
R	I163	H12-1
S	I164	H13-1
T	I500	A27-6
U	I501	A28-6
V	I502	A29-6
W	I503	A30-6
X	I504	A31-6
Y	I505	A32-6
Z	I600	A53-6
a		
b	GRD	

(7E1)

G1

PIN	TERM	JACK
A	X002	J12-12
B	X012	K12-12
C	X022	L12-12
D	N315	J44-6
E	X042	N12-12
F	X052	012-12
H	X562	M15-6
J	X072	K36-12
K	X082	L36-12
L	X592	M15-12
M	X102	N36-12
N	X112	036-12
P	X612	060-6
R	X132	K57-12
S	X142	L57-12
T	Z002	A60-5
U	Z012	A61-5
V	Z022	A62-5
W	Z032	A63-5
X	Z042	A64-5
Y	Z052	A65-5
Z	X610	060-12
a	X233	083-12
b	GRD	

(8D2)

H1

PIN	TERM	JACK
A	H911	P45-1
B	H911	P45-2
C	H914	P46-1
D	H914	P46-2
E	H915	P52-1
F	H915	P52-2
H	H920	P53-1
J	H920	P53-2
K	H921	P54-1
L	H921	P54-3
M	H924	P55-1
N	H924	P55-2
P	H930	P58-1
R		
S	H931	P59-1
T	H931	P59-2
U	H934	P57-1
V	H934	P57-2
W	H937	P60-1
X	H968	P62-1
Y	Y157	I73-10
Z	Q000	J01-5
a		
b	GRD	

(301)

H2

PIN	TERM	JACK
A		
B	A991	L46-9
C	Q000	J01-11
D	A990	L46-2
E	J000	P34-1
F		
H		
J	H941	P65-1
K	H900	P40-1
L	H901	P41-1
M	H904	P42-1
N	H904	P42-2
P	H904	P42-3
R	H905	P43-1
S	H910	P44-1
T	H910	P44-2
U	H981	P36-2
V	H981	P36-3
W	H971	P61-1
X	OO CARD	H82-4
Y	OO CARD	H82-10
Z		
a	F676	J70-1
b	GRD	

(302)

I1

PIN	TERM	JACK
A	P520	F06-12
B	J920	P33-7
C		
D	H968	P62-2
E	H901	P41-2
F	X002	J12-5
H	X003	J13-5
J		
K	H937	P60-2
L	H921	P54-2
M	H981	P36-1
N		
P	H911	P45-3
R	A990	L46-5
S	A992	L65-6
T	A990	L46-6
U	N030	J23-6
V	N030	J23-5
W	N034	J24-5
X	N034	J24-6
Y		
Z		
a		
b	GRD	

(4K2)

J1

PIN	TERM	JACK
A	X003	J13-11
B	X013	K13-11
C	X023	L13-11
D	X033	M13-12
E	X043	N13-12
F	X053	013-12
H	X063	J37-12
J	X073	K37-12
K	X083	L37-12
L	X093	M37-12
M	X103	N37-11
N	X113	037-12
P	X123	J58-11
R	X133	K58-12
S	X143	L58-12
T	X153	M58-12
U	X163	N58-12
V	X173	058-12
W	X183	J83-12
X	X193	K83-12
Y	X203	L83-12
Z	X213	M83-12
a	X223	N83-12
b	GRD	

(8H3)

J2

PIN	TERM	JACK
A	A503	M43-1
B	A503	M43-2
C	A503	M43-3
D	A503	M43-4
E	A623	M44-1
F	A623	M44-2
H	A623	M44-3
J	A632	L45-12
K	A632	L45-11
L	A632	L45-10
M	A622	L43-12
N	A632	L45-9
P	A632	L45-8
R	A622	L43-11
S	W003	061-11
T	A992	L65-1
U	X110	034-12
V	X121	J56-11
W	X120	J55-12
X	X131	K56-11
Y	X130	K55-12
Z	X141	L56-11
a	X140	L55-12
b	GRD	

(2J2)

K1

PIN	TERM	JACK
A	X001	J11-12
B	X000	J10-12
C	X011	K11-12
D	X010	K10-12
E	X021	L11-12
F	X020	L10-12
H	X031	M11-12
J	X030	M10-12
K	X041	N11-12
L	X040	N10-12
M	X051	011-12
N	X050	010-12
P	X061	J35-11
R	X060	J34-12
S	X071	K35-11
T	X070	K34-12
U	X081	L35-11
V	X080	L34-12
W	X091	M35-11
X	X090	M34-12
Y	X101	N35-11
Z	X100	N34-11
a	X111	035-11
b	GRD	

(2K1)

K2

PIN	TERM	JACK
A	Q231	073-12
B	Q230	072-12
C	F679	H83-12
D	F679	H83-11
E	N624	H84-12
F	N624	H84-11
H	Q232	074-2
J	Q233	074-8
K	N614	H84-5
L	N614	H84-6
M	F677	J70-12
N	F677	J70-11
P	A232	077-3
R	A233	078-3
S	A001	J06-8
T	A000	J05-8
U	A231	076-9
V	A230	075-9
W	H981	P36-4
X	N543	N63-1
Y	N443	023-1
Z	M948	G06-7
a	A989	I05-7
b	GRD	

(2K2)

L1

PIN	TERM	JACK
A	X001	J11-11
B	X011	K11-11
C	X021	L11-11
D	X031	M11-11
E	X041	N11-11
F	X051	011-11
H	X061	J35-10
J	X071	K35-10
K	X081	L35-10
L	X091	M35-10
M	X101	N35-10
N	X111	035-10
P	X121	J56-10
R	X131	K56-10
S	X141	L56-10
T		
U		
V		
W		
X		
Y		
Z		
a		
b	GRD	

(5C1)

L2

PIN	TERM	JACK
A	X122	J57-5
B	X132	K57-5
C	X142	L57-5
D	X152	M57-4
E	X162	N57-4
F	X172	057-4
H	X182	J82-4
J	X192	K82-4
K	X202	L82-4
L	X212	M82-4
M	X222	N82-4
N	X232	082-4
P		
R		
S		
T		
U		
V		
W		
X		
Y		
Z		
a		
b	GRD	

(7I3)

M2

PIN	TERM	JACK
A	M923	H07-5
B	M924	H07-9
C	M925	H08-1
D	M926	H08-5
E	M927	H08-9
F	M930	G01-1
H	M931	G01-5
J	M932	G01-9
K	M933	G02-1
L	M934	G02-5
M	M935	G02-9
N	M936	G03-1
P	M937	G03-5
R	M940	G03-9
S	M941	G04-1
T	M942	G04-5
U	M943	G04-9
V	M944	G05-1
W	M945	G05-5
X	M946	G05-9
Y	M947	G06-1
Z	M948	G06-5
a	L993	G07-11
b	GRD	

(CONSOLE J20303)

N1

PIN	TERM	JACK
A	L520	G80-11
B	L521	G84-3
C	L522	G84-7
D	L523	G84-11
E	M900	H01-1
F	M901	H01-5
H	M902	H01-9
J	M903	H02-1
K	M904	H02-5
L	M905	H02-9
M	M906	H03-1
N	M907	H03-5
P	M910	H03-9
R	M911	H04-1
S	M912	H04-5
T	M913	H04-9
U	M914	H05-1
V	M915	H05-5
W	M916	H05-9
X	M917	H06-1
Y	M920	H06-5
Z	M921	H06-9
a	M922	H07-1
b	GRD	

(CONSOLE J20304)

N2

PIN	TERM	JACK
A	L421	G83-3
B	L422	G83-7
C	L423	G83-11
D	L500	I04-3
E	L501	I04-7
F	L502	I04-11
H	L503	P17-3
J	L504	P17-7
K	L505	P17-11
L	L506	I09-3
M	L507	I09-7
N	L508	I09-11
P	L509	P23-3
R	L511	P23-7
S	L511	P23-11
T	L512	I79-3
U	L513	I79-7
V	L514	I79-11
W	L515	I84-3
X	L516	I84-7
Y	L517	I84-11
Z	L518	G80-3
a	L519	G80-7
b	GRD	

(CONSOLE J20305)

O1

PIN	TERM	JACK
A	M522	G82-5
B	M523	G82-9
C	L400	I03-3
D	L401	I03-7
E	L402	I03-11
F	L403	P16-3
H	L404	P16-7
J	L405	P16-11
K	L406	I08-3
L	L407	I08-7
M	L408	I08-11
N	L409	P22-3
P	L410	P22-7
R	L411	P22-11
S	L412	I78-3
T	L413	I78-7
U	L414	I78-11
V	L415	I83-3
W	L416	I83-7
X	L417	I83-11
Y	L418	G79-3
Z	L419	G79-7
a	L420	G79-11
b	GRD	

(CONSOLE J20306)

O2

PIN	TERM	JACK
A	M423	G81-9
B	M500	I02-1
C	M501	I02-5
D	M502	I02-9
E	M503	P15-1
F	M504	P15-5
H	M505	P15-9
J	M506	I07-1
K	M507	I07-5
L	M508	I07-9
M	M509	P21-1
N	M510	P21-5
P	M511	P21-9
R	M512	I77-1
S	M513	I77-5
T	M514	I77-9
U	M515	I82-1
V	M516	I82-5
W	M517	I82-9
X	M518	G78-1
Y	M519	G78-5
Z	M520	G78-9
a	M521	G82-1
b	GRD	

(CONSOLE J20307)

P1

PIN	TERM	JACK
A	M400	I01-1
B	M401	I01-5
C	M402	I01-9
D	M403	P14-1
E	M404	P14-5
F	M405	P14-9
H	M406	I06-1
J	M407	I06-5
K	M408	I06-9
L	M409	P20-1
M	M410	P20-5
N	M411	P20-9
P	M412	I76-1
R	M413	I76-5
S	M414	I76-9
T	M415	I81-1
U	M416	I81-5
V	M417	I81-9
W	M418	G77-1
X	M419	G77-5
Y	M420	G77-9
Z	M421	G81-1
a	M422	G81-5
b	GRD	

(CONSOLE J20308)

NOTE:
CABLE DESTINATIONS ARE SHOWN BELOW THE TABLES ABOVE; e.g., (3G1) INDICATES THAT THE CABLE DESTINATION IS CHASSIS 10300, CONNECTOR G1.

REV. | AUTH. | DATE | REL. | DRW. | CHK. | APPROVED — REVISIONS

APPROVED - 4-5-63
CHECKED - [signature] 1-9-63
DRAWN - TAW
DESIGNED - GAS 12-4-62

REFERENCE DRAWINGS

COMPONENTS (UNLESS OTHERWISE INDICATED)

	TOLERANCE	VALUE	SIZE
RESISTORS			
CAPACITORS			

TITLE: CABLE CONNECTOR PIN ASSIGNMENTS CHASSIS 10100

CONTROL DATA CORPORATION

PROJECT OR PRODUCT: 1604-A

DRAWING NUMBER: XDP 214612 G

PAGE 80.1

PIN	A2	B1 TERM	B1 JACK	B2 TERM	B2 JACK	C1 TERM	C1 JACK
A		E201	B01-7	E251	B77-7	N020	E01-9
B	T01-T04, pin 1	E203	B02-7	R253	B78-7	K852	H03-6
C		E211	B03-7	E261	B79-7	K856	H05-6
D		E213	B04-7	E263	B80-7	K860	H07-6
E		E215	B05-7	E265	B81-7	K873	H09-12
F		E221	B06-7	E271	B82-7	L877	H11-12
H		E223	B07-7	E273	B83-7	K881	H13-12
J	T01-T04, pin 3	E225	B08-7	E275	B84-7	A970	O79-7
K		E231	C03-7	E281	C79-7	A981	E07-6
L		E233	C04-7	E283	C80-7	A983	E07-12
M	T01-T04, pin 2	E235	C05-7	E285	C81-7	Q981	E09-6
N		E241	C06-7	E291	C82-7	Q983	E09-12
P		E243	C07-7	E293	C83-7	Q471	O73-12
R		E245	C08-7	E295	C84-7	X470	O80-3
S		J202	B09-1	J252	B74-1	L447	G83-9
T		J212	B09-7	J262	B74-7	N522	N69-12
U		J222	B10-1	J272	B75-1	N522	N69-11
V		J232	A17-1	J282	A68-1	A360	J50-12
W		J242	B11-1	J292	B76-1	A361	J51-11
X		J342	A33-1	J362	A52-1	A977	I05-6
Y		A228	A38-1	W229	A51-1	A473	O78-12
Z		N290	A19-1	N294	A66-1	J003	F06-5
a		N291	A26-1	N295	A59-1	J005	F06-12
b		GRD		GRD		GRD	
	(FUSE PANEL)	(3E1)		(4E1)		(6E1)	

PIN	C2 TERM	C2 JACK	D1 TERM	D1 JACK	D2 TERM	D2 JACK	E1 TERM	E1 JACK
A	M992	D01-11	X240	J10-5	I506	A27-11	X360	J55-5
B	M991	D01-7	N073	J22-6	I507	A28-11	X370	K55-5
C	M990	D01-3	N073	J22-7	I508	A29-11	X380	L55-5
D	H980	P39-3	N073	J22-8	I509	A30-11	X390	M55-5
E	I297	N63-1	N073	J22-9	I510	A31-11	N273	J68-9
F	J140	D03-6	N073	J22-10	I511	A32-11	N273	J68-10
H	M994	D04-7	X241	J11-12	X064	D82-1	X361	J56-12
J	I298	N63-7	X251	K11-12	X074	D82-7	X371	K56-12
K	I299	L65-7	X261	L11-12	X084	D83-1	X381	L56-12
L	H939	P60-2	X271	M11-12	X094	D83-7	X391	M56-12
M			X281	N11-12	X104	D84-1	X401	N56-12
N			X291	O11-12	X114	D84-7	X411	O56-12
P			M980	P30-3	J802	P26-12		
R			M981	P30-7	Q988	P26-6	V021	E05-12
S	H020	E01-12	M982	P30-11	H923	P54-3	OO CARD	F05-5
T	H021	E04-12	M983	P29-3	H980	P39-3	OO CARD	F05-11
U	L990	H82-1	M984	P29-7	OO CARD	F05-4	M927	D02-7
V	L991	D05-1	M985	P29-11	OO CARD	F05-10		
W			M725	D02-11	Y255	B73-1	L680	H82-5
X			J140	D03-5	A872	L45-7	M199	F07-3
Y	J902	H01-1						
Z			X462	N82-11			M060	F07-7
a			X463	N83-12			J006	I05-7
b	GRD		GRD		GRD		GRD	
	(4C2)		(5D1)		(1D2)		(7D1)	

PIN	E2 TERM	E2 JACK	F1 TERM	F1 JACK	F2 TERM	F2 JACK	G1 TERM	G1 JACK
A	X300	J34-5	N373	J71-5	I506	A27-6	I735	K15-1
B	X310	K34-5	N373	J71-6	I507	A28-6	I736	K15-7
C	X320	L34-5	N373	J71-7	I508	A29-6	I737	M15-1
D	X330	M34-5	N373	J71-8	I509	A30-6	I738	M15-7
E	X340	N34-5	N373	J71-9	I510	A31-6	I739	I34-1
F	X350	O34-5	N373	J71-10	I511	A32-6	I740	I34-7
H	X301	J35-12	X421	J81-12	I606	A53-6	I741	J43-7
J	X311	K35-12	X431	K81-12	I607	A54-6	I742	J43-7
K	X321	L35-12	X441	L81-12	I608	A55-6	I743	J44-1
L	X331	M35-12	X451	M81-12	I609	A56-6	I744	J44-7
M	X341	N35-12	X461	N81-12	I610	A57-6	I745	I51-1
N	X351	O35-12	X471	O81-12	I611	A58-6	I746	I51-7
P	I509	A30-12			I506	A27-9	I747	J70-1
R	I510	A31-12	OO CARD	F05-6	I507	A28-9	I748	J70-7
S	I511	A32-12	OO CARD	F05-12	I508	A29-9	I749	L65-1
T	I506	A27-12			I509	A30-9	Z060	A20-5
U	I507	A28-12			I510	A31-9	Z070	A21-5
V	I508	A29-12			I511	A32-9	Z080	A22-5
W	A463	N78-12			X432	K82-4	Z090	A23-5
X	A462	N77-12			X442	L82-4	Z100	A24-5
Y	A977	I05-5			X452	M82-4	Z110	A25-5
Z	M993	D04-3			X462	N82-4	J140	D03-10
a	J811	P32-7			X472	O82-4	X473	O83-12
b	GRD		GRD		GRD		GRD	
	(6D1)		(8D1)		(7E2)		(8E2)	

PIN	G2 TERM	G2 JACK	H1 TERM	H1 JACK	H2 TERM	H2 JACK	I1 TERM	I1 JACK
A	X243	J13-12	H913	P45-1	H913	P45-3	X360	J55-6
B	X253	K13-11	H916	P46-1	H980	P39-1	X370	K55-6
C	X263	L13-12	H916	P46-2	A470	O75-12	X380	L55-6
D	X273	M13-12	H917	P52-2	Q470	O72-10	X390	M55-6
E	X283	N13-12	H917	P52-1	J140	D03-11	X400	N55-6
F	X293	O13-12	N923	P24-12	A342	N31-12	X410	O55-6
H	X303	J37-12	H922	P53-2	A343	N32-12	X420	J80-6
J	X313	K37-12	H923	P54-1	A451	M76-11	X430	K80-6
K	X323	L37-12	H923	P54-3	H943	P35-1	X440	L80-6
L	X333	M37-12	N923	P24-11	X470	O80-11	X450	M80-6
M	X343	N37-12	H926	P55-2	X470	O80-12	X460	N80-6
N	X353	O37-12	H932	P58-1	H902	P40-1	X360	J55-12
P	X363	J58-12	H932	P58-2	H903	P41-1	X361	J56-11
R	X373	K58-12	H933	P59-1	H906	P42-1	X370	K55-12
S	X383	L58-12	H933	P59-3	H906	P42-2	X371	K56-11
T	X393	M58-12	H936	P57-1	H906	P42-3	X380	L55-12
U	X403	N58-12	H936	P57-2	H907	P43-1	X381	L56-11
V	X413	O58-12	H959	P62-1	H912	P44-1	X390	M55-12
W	X423	J83-12	H939	P60-1	H912	P44-2	X391	M56-11
X	X433	K83-12	H983	P36-2	A372	K52-12	X400	N55-12
Y	X443	L83-12	H987	P27-1	A373	K53-12	X401	N56-11
Z	X453	M83-12	H983	P36-3	Q453	M75-11	X410	O55-12
a	X463	N83-11	H973	P61-1	L691	H83-1.	X411	O56-11
b	GRD		GRD		GRD		GRD	
	(8G3)		(3N1)		(3N2)		(5E2)	

PIN	I2 TERM	I2 JACK	J1 TERM	J1 JACK	J2 TERM	J2 JACK	K1 TERM	K1 JACK
A	X420	J80-10	L696	H82-9	A872	L45-12	X242	J12-4
B	X421	J81-9	L696	D05-9	A872	L45-11	X243	J13-4
C	X430	K80-10	H980	P39-3	A872	L45-10	X252	K12-4
D	X431	K81-9	H983	P36-1	A862	L43-12	X253	K13-4
E	X440	L80-10			A872	L45-9	X262	L12-4
F	X441	L81-9			A872	L45-8	X263	L13-4
H	X450	M80-10	J921	P33-7	A862	L43-11	N080	K23-11
J	X451	M81-9	H923	P54-2	A743	M43-1	N080	K23-12
K	X240	J10-9	H913	P45-2	A743	M43-2	N180	N21-5
L	X250	K10-9	H903	P41-2	A743	M43-3	N180	N21-6
M	X260	L10-9			A743	M43-4	N180	N21-7
N	X270	M10-9			A863	M44-1	N180	N21-8
P	X280	N10-9	H980	P39-2	A863	M44-2	X302	J36-4
R	X290	O10-9			A863	M44-3	X303	J37-4
S	X300	J34-9	L690	H83-5	J001	P34-1	X312	K36-4
T	X310	K34-9			A752	L44-8	X313	K37-4
U	X320	L34-9	J002	G09-5	N280	N45-12	X322	L36-4
V	X330	M34-9	J004	G09-11	X362	J57-4	X323	L37-4
W	X340	N34-9	J006	I05-12	X363	J58-4	N280	N45-7
X	X350	O34-9	J007	P33-1	X372	K57-4	N280	N45-8
Y	X360	J55-10			X373	K58-4	N280	N45-9
Z	X370	K55-10			X382	L57-4	N280	N45-10
a	X380	L55-10			X383	L58-4	N280	N45-11
b	GRD		GRD		GRD		GRD	
	(5F1)		(4N2)		(1J2)		(1K1)	

PIN	K2 TERM	K2 JACK	L1 TERM	L1 JACK	M2 TERM	M2 JACK	N1 TERM	N1 JACK
A	Q242	J04-3	X242	J12-5	N017	L01-15	L544	G80-11
B	Q243	J04-9	X252	K12-5	N017	L01-13	L545	G84-3
C	A471	O76-9	X262	L12-5	M993	D04-1	L546	G84-7
D	A470	O75-11	X272	M12-5	M994	D04-5	L547	G84-11
E	Q471	O73-8	X282	N12-5	M690	G01-1	M725	D02-9
F	Q470	O72-12	X292	O12-5	M691	G01-5	L991	D05-3
H	Q241	J03-8	X302	J36-5	M692	G01-9	L990	H82-3
J	Q240	J02-6	X312	K36-5	M693	G02-1		
K	A471	O76-10	X322	L36-5	M694	G02-5		
L	A470	O75-9	X332	M36-5	M695	G02-9		
M	Q471	O73-9	X342	N36-5	M987	D02-5		
N	Q470	O72-11	X352	O36-5	Y257	I73-1		
P	A241	J06-8	X362	J57-5	M986	D02-1	M199	F07-1
R	A240	J05-8	X372	K57-5	M990	D01-1	L689	D05-7
S	Q472	O74-3	X382	L57-5	M992	D01-9	J002	G09-1
T	Q473	O60-3	X392	M57-5	M991	D01-5	J004	G09-7
U	A242	J07-4	X402	N57-5	M980	P30-1		
V	A243	J08-4	X412	O57-5	M981	P30-5	L696	H82-11
W	N380	J69-12	X422	J82-4	M982	P30-9	L690	H83-7
X	H943	P35-8			M983	P29-1	L680	H82-7
Y	H943	P35-7			M984	P29-5	L955	E77-12
Z	J007	P33-2			M985	P29-9		
a	A768	I10-7			M448	P28-1	L691	H83-3
b	GRD		GRD		GRD		GRD	
	(1K2)		(703)		(CONSOLE J20309)		(CONSOLE J20310)	

PIN	N2 TERM	N2 JACK	O1 TERM	O1 JACK	O2 TERM	O2 JACK	P1 TERM	P1 JACK
A	L445	G83-3	M546	G82-5	M447	G81-9	M424	I01-1
B	L446	G83-7	M547	G82-9	M524	I02-1	M425	I01-5
C	L447	G83-11	L424	I03-3	M525	I02-5	M426	I01-9
D	L524	I04-3	L425	I03-7	M526	I02-9	M427	P14-1
E	L525	I04-7	L426	I03-11	M527	P15-1	M428	P14-5
F	L526	I04-11	L427	P16-3	M528	P15-5	M429	P14-9
H	L527	P17-3	L428	P16-7	M529	P15-9	M430	I06-1
J	L528	P17-7	L429	P16-11	M530	I07-1	M431	I06-5
K	L529	P17-11	L430	I08-3	M531	I07-5	M432	I06-9
L	L530	I09-3	L431	I08-7	M532	I07-9	M433	P20-1
M	L531	I09-7	L432	I08-11	M533	P21-1	M434	P20-5
N	L532	I09-11	L433	P22-3	M534	P21-5	M435	P20-9
P	L533	P23-3	L434	P22-7	M535	P21-9	M436	I76-1
R	L534	P23-7	L435	P22-11	M536	I77-1	M437	I76-5
S	L535	P23-11	L436	I78-3	M537	I77-5	M438	I76-9
T	L536	I79-3	L437	I78-7	M538	I77-9	M439	I81-1
U	L537	I79-7	L438	I78-11	M539	I82-1	M440	I81-5
V	L538	I79-11	L439	I83-3	M540	I82-5	M441	I81-9
W	L539	I84-3	L440	I83-7	M541	I82-9	M442	G77-1
X	L540	I84-7	L441	I83-11	M542	G78-1	M443	G77-5
Y	L541	I84-11	L442	G79-3	M543	G78-5	M444	G77-9
Z	L542	G80-3	L443	G79-7	M544	G78-9	M445	G81-1
a	L543	G80-7	L444	G79-11	M545	G82-1	M446	G81-5
b	GRD		GRD		GRD		GRD	
	(CONSOLE J20311)		(CONSOLE J20312)		(CONSOLE J20313)		(CONSOLE J20314)	

NOTE:
CABLE DESTINATIONS ARE SHOWN BELOW THE TABLES ABOVE; e.g., (3G1) INDICATES THAT THE CABLE DESTINATION IS CHASSIS 10300, CONNECTOR G1.

REVISIONS: 12-4-62, 1-15-63, 4-5-63

REFERENCE DRAWINGS

COMPONENTS (UNLESS OTHERWISE INDICATED) — TOLERANCE, VALUE, SIZE — RESISTORS, CAPACITORS

DESIGNED GAS · DRAWN TAW · CHECKED · APPROVED

TITLE: CABLE CONNECTOR PIN ASSIGNMENTS CHASSIS 10200

CONTROL DATA CORPORATION

PROJECT OR PRODUCT: 1604-A

DRAWING NUMBER: XDP 214613 G

A2

PIN	
A	
B	T01-T04, pin 1
C	
D	
E	
F	
H	
J	T01-T04, pin 3
K	
L	
M	T01-T04, pin 2
N	
P	
R	

(FUSE PANEL)

B1

PIN	TERM	JACK
A	J331	I83-9
B	J334	J78-12
C	I512	A27-6
D	I513	A28-6
E	I514	A29-6
F	I515	A30-6
H	I516	A31-6
J	I517	A32-6
K	I612	A53-6
L	I613	A54-6
M	I614	A55-6
N	I615	A56-6
P	I616	A57-6
R	I616	A58-6
S	I512	A27-9
T	I513	A28-9
U	I514	A29-9
V	J844	N76-7
W	K141	M05-7
X	K141	M05-12
Y	K141	M05-6
Z		
a		
b	GRD	

(7F2)

B2

PIN	TERM	JACK
A	E351	B77-7
B	E353	B78-7
C	E361	B79-7
D	E363	B80-7
E	E365	B81-7
F	E371	B82-7
H	E373	B83-7
J	E373	B84-7
K	E381	C79-7
L	E383	C80-7
M	E385	C81-7
N	E391	C82-7
P	E393	C83-7
R	E395	C84-7
S	J253	B74-1
T	J263	B74-7
U	J273	B75-1
V	J283	A68-1
W	J293	B76-1
X	J363	A52-1
Y	W209	A51-1
Z	N394	A66-1
a	N395	A59-1
b	GRD	

(4E2)

C1

PIN	TERM	JACK
A	I612	A53-12
B	I613	A54-12
C	I614	A55-12
D	I615	A56-12
E	I616	A57-12
F	I616	A58-12
H	N040	D78-12
J	N040	D78-11
K	N040	D78-10
L	N140	E78-12
M	N140	E78-11
N	N140	E78-10
P	N140	E78-9
R	N240	F78-12
S	N240	F78-11
T	N240	F78-10
U	N240	F78-9
V	N340	G78-12
W	N340	G78-11
X	N340	G78-10
Y	N040	D78-9
Z	N040	D78-8
a	N040	D78-7
b	GRD	

(6E2)

C2

PIN	TERM	JACK
A	S011	D80-3
B	S010	D79-3
C	S021	D82-3
D	S020	D81-3
E	S031	D84-3
F	S030	D83-3
H	S041	E80-3
J	S040	E79-3
K	S051	E82-3
L	S050	E81-3
M	S061	E84-3
N	S060	E83-3
P	S071	F80-3
R	S070	F79-3
S	S081	F82-3
T	S080	F81-3
U	S091	F84-3
V	S090	F83-3
W	S101	G80-3
X	S100	G79-3
Y	S111	G82-3
Z	S110	G81-3
a	S121	G84-3
b	GRD	

(4B2)

D1

PIN	TERM	JACK
A	I612	A53-11
B	I613	A54-11
C	I614	A55-11
D	I615	A56-11
E	I616	A57-11
F	I616	A58-11
H	X124	D01-1
J	X134	D01-7
K	X144	D02-1
L	X154	D02-7
M	X164	D03-1
N	X174	D03-7
P		
R	F433	M26-2
S	H886	J48-11
T	H888	J49-11
U	N930	J76-6
V	N930	J76-5
W	A997	K54-7
X		
Y		
Z		
a		
b	GRD	

(1E1)

D2

PIN	TERM	JACK
A	S010	D79-12
B	S020	D81-12
C	S030	D83-12
D	S040	E79-12
E	S050	E81-12
F	S060	E83-12
H	S070	F79-12
J	S080	F81-12
K	S090	F83-12
L	S100	G79-12
M	S110	G81-12
N	S120	G83-12
P	S130	H81-12
R	S140	H83-12
S	J030	J80-3
T	J032	J81-3
U	J034	J82-3
V	J036	J83-3
W	J038	J84-3
X	J330	I82-10
Y	J333	J78-3
Z	H990	I78-7
a	H991	I79-7
b	GRD	

(1B1)

E1

PIN	TERM	JACK
A	S010	D79-11
B	S020	D81-11
C	S030	D83-11
D	S040	E79-11
E	S050	E81-11
F	S060	E83-11
H	S070	F79-11
J	S080	F81-11
K	S090	F83-11
L	S100	G79-11
M	S110	G81-11
N	S120	G83-11
P	S130	H81-11
R	S140	H83-11
S	J030	J80-4
T	J032	J81-4
U	J034	J82-4
V	J036	J83-4
W	J038	J84-4
X	J330	I82-6
Y	J333	J78-4
Z	H990	I78-8
a	H991	I79-8
b	GRD	

(2B1)

E2

PIN	TERM	JACK
A	S010	D79-9
B	S020	D81-9
C	S030	D83-9
D	S040	E79-9
E	S050	E81-9
F	S060	E83-9
H	S070	F79-9
J	S080	F81-9
K	S090	F83-9
L	S100	G79-9
M	S110	G81-9
N	S120	G83-9
P	S130	H81-9
R	S140	H83-9
S	J030	J80-6
T	J032	J81-6
U	J034	J82-6
V	J036	J83-6
W	J038	J84-6
X	J331	I83-12
Y	J334	J78-8
Z	H990	I78-9
a	H991	I79-9
b	GRD	

(4B1)

F1

PIN	TERM	JACK
A	S011	D80-12
B	S021	D82-12
C	S031	D84-12
D	S041	E80-12
E	S051	E82-12
F	S061	E84-12
H	S071	F80-12
J	S081	F82-12
K	S091	F84-12
L	S101	G80-12
M	S111	G82-12
N	S121	G84-12
P	S131	H82-12
R	S141	H84-12
S	J031	J80-9
T	J033	J81-9
U	J035	J82-9
V	J037	J83-9
W	J039	J84-9
X	J332	I84-5
Y	J335	J05-11
Z	H992	I80-9
a	H993	I81-9
b	GRD	

(5B1)

F2

PIN	TERM	JACK
A	S011	D80-11
B	S021	D82-11
C	S031	D84-12
D	S041	E80-11
E	S051	E82-11
F	S061	E84-11
H	S071	F80-11
J	S081	F82-11
K	S091	F84-11
L	S101	G80-11
M	S111	G82-11
N	S121	G84-11
P	S131	H82-11
R	S141	H84-11
S	J031	J80-10
T	J033	J81-10
U	J035	J82-10
V	J037	J83-10
W	J039	J84-10
X	J332	I84-6
Y	J335	J05-10
Z	H992	I80-10
a	H993	I81-10
b	GRD	

(6B1)

G1

PIN	TERM	JACK
A	S011	D80-10
B	S021	D82-10
C	S031	D84-10
D	S041	E80-10
E	S051	E82-10
F	S061	E84-10
H	S071	F80-10
J	S081	F82-10
K	S091	F84-10
L	S101	G80-10
M	S111	G82-10
N	S121	G84-10
P	S131	H82-10
R	S141	H84-10
S	J031	J80-11
T	J033	J81-11
U	J035	J82-11
V	J037	J83-11
W	J039	J84-11
X	J332	I84-7
Y	J335	J05-12
Z	H992	I80-11
a	H993	I81-11
b	GRD	

(7B1)

G2

PIN	TERM	JACK
A	S011	D80-9
B	S021	D82-9
C	S031	D84-9
D	S041	E80-9
E	S051	E82-9
F	S061	E84-9
H	S071	F80-9
J	S081	F82-9
K	S091	F84-9
L	S101	G80-9
M	S111	G82-9
N	S121	G84-9
P	S131	H82-9
R	S141	H84-9
S	J031	J80-12
T	J033	J81-12
U	J035	J82-12
V	J037	J83-12
W	J039	J84-12
X	J331	I83-11
Y	J334	J78-11
Z	H992	I80-12
a	H993	I81-12
b	GRD	

(8B1)

H1

PIN	TERM	JACK
A	V865	K45-12
B	V205	K61-8
C	F555	082-11
D	V866	L05-6
E	V420	M73-9
F	H974	J52-12
H	H974	J52-11
J	H974	J52-10
K	H974	J52-9
L	H974	J52-8
M	V211	K68-9
N	V207	K63-6
P		
R	V621	034-5
S	V206	K62-5
T	K530	L09-11
U	K530	L09-10
V	K530	L09-9
W	K311	L31-7
X	K313	L30-7
Y	K315	L28-4
Z	K317	L27-3
a	K510	K13-2
b	GRD	

(5H1)

H2

PIN	TERM	JACK
A	V077	M74-9
B	V679	073-11
C	V483	K40-6
D	F541	N80-8
E	V661	052-11
F	V650	055-10
H	V861	K42-12
J	K472	L75-6
K	V681	P32-11
L	V676	071-9
M	V680	074-11
N	V850	K40-12
P	V670	060-9
R	V886	K48-7
S	V888	K49-7
T	V860	K42-6
U	V203	K60-11
V	V611	027-8
W	V673	062-11
X	V862	K45-6
Y	V678	073-5
Z	V698	P44-11
a		
b	GRD	

(5H2)

I1

PIN	TERM	JACK
A	H033	K80-4
B	H041	K81-2
C	H033	K80-2
D		
E	00 CARD	J74-6
F	00 CARD	J74-12
H	F433	M26-3
J		
K	V637	M40-6
L	W910	M65-1
M	K407	M46-10
N	K403	M44-2
P	K411	K72-2
R		
S		
T		
U		
V		
W		
X	J137	N08-7
Y		
Z	H944	I76-1
a		
b	GRD	

(5G1)

I2

PIN	TERM	JACK
A	V670	060-8
B	V403	M61-9
C	V603	021-5
D	V680	074-9
E	H431	L74-1
F	V222	K76-5
H	V208	K65-9
J	K413	K73-11
K	V407	M60-7
L	V409	M62-8
M	V205	K61-7
N	V207	K63-5
P	V214	K51-12
R	K612	J16-1
S	K614	J17-1
T		
U	V102	L83-10
V	V102	L83-9
W		
X	V064	F07-9
Y	V066	F08-7
Z	Y355	B73-1
a	H810	J23-4
b	GRD	

(4I2)

J1

PIN	TERM	JACK
A	K623	J11-4
B	V432	G76-12
C	H860	J43-1
D	H860	J43-2
E	F476	M31-8
F	H891	J51-1
H	F553	083-8
J	K408	L42-4
K	V432	G76-7
L	K450	J12-4
M	H850	J42-4
N	K461	M69-7
P		
R	K520	L07-2
S	K521	L08-2
T	I771	K27-1
U	N397	I77-2
V		
W	K580	L13-3
X	K580	L13-4
Y	K580	L13-5
Z	V971	K30-1
a	V682	P34-10
b	GRD	

(4J1)

J2

PIN	TERM	JACK
A	W239	A51-7
B	J360	A52-7
C	J176	N03-5
D	J064	P69-10
E	V608	036-11
F	F461	M30-12
H	K207	M68-9
J	K207	M68-10
K	J176	N03-6
L	K403	M44-4
M	K411	K72-6
N	K410	K71-4
P	V910	H11-9
R	V102	L83-11
S	J064	P69-1
T	F670	L80-7
U	H033	K80-12
V	H041	K81-12
W	V010	L79-1
X	V030	L72-6
Y	F731	N12-3
Z	H808	J22-12
a	K207	M68-11
b	GRD	

(4J2)

K1

PIN	TERM	JACK
A	V971	K30-5
B	H050	K78-3
C	H102	K83-1
D	F505	L82-12
E	V077	M74-7
F	H402	L57-1
H	H030	L70-1
J	V073	H08-1
K	K623	J11-10
L	F512	M82-6
M	S120	G83-3
N	S131	H82-3
P	H647	L53-2
R	S130	H81-3
S	H810	J23-5
T	S141	H84-3
U	S140	H83-3
V	K610	H12-11
W	H101	K82-1
X	F500	L82-6
Y	F506	M84-6
Z	00 CARD	J74-4
a	00 CARD	J74-10
b	GRD	

(4K1)

K2

PIN	TERM	JACK
A	F432	M25-7
B	F433	M26-1
C	F447	M27-1
D	F454	L80-1
E	F455	M28-1
F	F456	M29-1
H	F457	M29-7
J	F460	M30-1
K	F461	M30-7
L	F475	M31-1
M	F476	M31-7
N	F500	L82-1
P	F501	L81-1
R	F501	L81-2
S	F505	L82-7
T	F506	M84-1
U	F427	M24-1
V	F512	M82-1
W	F513	M82-7
X	F514	M81-1
Y	F517	M80-1
Z	H405	L60-11
a	V410	M63-3
b	GRD	

(6G2)

K3

PIN	TERM	JACK
A	H401	L56-3
B	K451	J13-5
C	F560	080-11
D	F560	080-9
E	F569	078-5
F	V402	M56-10
H	V404	M58-10
J	V404	M58-9
K	V404	M58-8
L	H407	L62-3
M	K460	M69-1
N	K622	H01-4
P	V063	F07-5
R	J064	P69-5
S	J065	P70-8
T	S010	D79-6
U	S011	D80-6
V	S020	D81-6
W	S021	D82-6
X	V862	K45-1
Y	V410	M63-6
Z		
a		
b	GRD	

(4J3)

L1

PIN	TERM	JACK
A	F527	N84-1
B	F536	N84-7
C	F537	N83-1
D	F540	N81-1
E	F541	N80-1
F	F546	M78-7
H	F549	M71-7
J	F549	M71-8
K	F549	M71-9
L	F552	M76-7
M	F553	083-1
N	F555	082-1
P	V420	M73-11
R	F557	081-1
S	F561	079-1
T	F565	079-7
U	F569	078-1
V	F571	078-7
W	V650	056-11
X	V209	K64-9
Y	F585	J56-1
Z	F430	M24-7
a	K623	J11-9
b	GRD	

(6H1)

L2

PIN	TERM	JACK
A	F586	J56-7
B	V820	K33-4
C	F589	J54-7
D	F590	K41-7
E	F594	K55-7
F	V404	M58-7
H	F596	P16-7
J	F454	L80-4
K	F620	K28-7
L	F636	K26-1
M		
N	F650	M25-1
P	F425	M23-1
R	F426	M23-7
S	N140	E78-8
T	N140	E78-7
U	N140	E78-6
V	N140	E78-5
W	N240	F78-8
X	N240	F78-7
Y	N240	F78-6
Z	N240	F78-5
a	N340	G78-9
b	GRD	

(6H2)

L3

PIN	TERM	JACK
A	Z122	A60-5
B	Z132	A61-5
C	Z142	A62-5
D	Z152	A63-5
E	Z162	A64-5
F	Z172	A65-5
H	S011	D80-4
J	S021	D82-4
K	S031	D84-4
L	S041	E80-4
M	S051	E82-4
N	S061	E84-4
P	S071	F80-4
R	S081	F82-4
S	S091	F84-4
T	S101	G80-4
U	S111	G82-4
V	S121	G84-4
W	S131	H82-4
X	S141	H84-4
Y		
Z		
a		
b	GRD	

(8E1)

M1

PIN	TERM	JACK
A	K503	K12-12
B	K502	K12-6
C		
D	V699	P65-9
E	V420	M73-12
F	F940	P21-9
H	F404	M20-1
J	F410	M26-7
K	F420	M22-1
L	F421	M83-1
M	V401	M56-3
N	F424	M22-7
P		
R	F664	N13-7
S	K580	L13-11
T	N340	G78-8
U	N340	G78-7
V	H940	I75-1
W	K561	L12-11
X	F475	M31-4
Y	J050	L21-1
Z	J172	N07-9
a	V403	M61-10
b	GRD	

(6I1)

M2

PIN	TERM	JACK
A		
B	H898	L15-1
C		
D	V103	L84-3
E	K623	J11-5
F	K581	L14-3
H	K581	L14-4
J	F552	M76-12
K	V010	L79-1
L	V811	K32-1
M	V814	K31-7
N	V820	K33-1
P	V821	K32-7
R	V830	K33-7
S	V831	K36-1
T	V832	K36-7
U	V834	K38-1
V	V843	K40-1
W	V861	K42-7
X		
Y	J332	I84-3
Z	K610	H12-2
a	J330	I82-3
b	GRD	

(4M2)

M3

PIN	TERM	JACK
A	K622	H01-3
B	V910	H11-11
C	V910	H11-10
D	V910	H11-12
E	V910	H11-8
F	V073	H08-9
H	N553	D76-1
J	N553	E76-1
K	N557	G76-1
L	H061	G01-1
M	K622	H01-2
N	K624	H02-1
P	K611	H13-3
R	V910	H11-7
S	K622	H01-5
T	K623	J11-11
U	J198	N76-1
V	K622	H01-8
W		
X		
Y		
Z		
a		
b	GRD	

(4M3)

N1

PIN	TERM	JACK
A	V810	K31-5
B	K315	L28-9
C	V647	M54-8
D	F518	M79-8
E	V814	K31-10
F	K313	L30-10
H	V637	M40-7
J	V820	K33-5
K	V644	M51-9
L	K317	L27-9
M	V647	M54-7
N	V821	K32-11
P	F541	N80-5
R	V830	K33-11
S	V660	052-4
T	V831	K36-5
U	F546	M78-8
V	V696	P62-10
W	V832	K36-11
X	V834	K38-5
Y	V838	K38-12
Z	V686	P42-12
a	V844	K41-5
b	GRD	

(2H1)

N2

PIN	TERM	JACK
A	F518	M79-6
B	V971	K30-12
C	J173	N05-1
D	J120	N04-1
E	J142	J05-1
F	K315	L28-7
H	K315	L28-6
J	K476	M32-3
K	W910	M65-6
L	F514	M81-5
M	J171	N06-1
N	K408	L42-10
P	V886	K48-5
R	V811	K32-5
S	F517	M80-9
T	F518	M79-9
U	V888	K49-8
V	K311	L31-11
W	V637	M40-8
X	J111	N11-7
Y	J111	N11-8
Z	K476	M32-2
a	K635	H07-12
b	GRD	

(2H2)

O1

PIN	TERM	JACK
A	V810	K31-6
B	V652	042-10
C	K315	L28-10
D	V647	M54-10
E	V814	K31-12
F	V652	042-9
H	K313	L30-11
J	V637	M40-10
K	V820	K33-6
L	V644	M51-10
M	K317	L27-10
N	V647	M54-9
P	V821	K32-12
R		
S	V830	K33-12
T	V660	052-5
U	V831	K36-6
V	V623	037-10
W	V832	K36-12
X	V407	M60-9
Y	Y357	I73-1
Z	V644	M51-8
a		
b	GRD	

(1H1)

O2

PIN	TERM	JACK
A		
B	J176	N03-4
C	V630	M36-9
D	J172	N07-6
E	K521	L08-11
F		
H		
J	V892	L16-6
K	K408	L42-11
L	V886	K48-6
M	V811	K32-6
N	F517	M80-10
P	F518	M79-10
R	V888	K49-9
S	K311	L31-10
T	V637	M40-9
U	V834	K38-6
V	V686	P42-10
W	V844	K41-6
X	00 CARD	J74-5
Y	00 CARD	J74-11
Z		
a	K326	K16-6
b	GRD	

(1H2)

P1

PIN	TERM	JACK
A	V404	M58-6
B	V413	I83-6
C	V679	073-9
D	V682	P34-11
E	F507	M84-7
F	F663	L84-7
H	K405	N38-7
J	J130	M65-7
K	V652	042-6
L	J123	N13-1
M	F728	N12-7
N	V693	P57-8
P	V420	M73-5
R	F557	D81-6
S	F477	K24-1
T	K451	J13-11
U	I615	A56-10
V	I616	A57-10
W	I616	A58-10
X	V405	M59-4
Y	J176	N03-4
Z	F588	J54-1
a	F663	L84-8
b	GRD	

(6P1)

NOTE:
CABLE DESTINATIONS ARE SHOWN BELOW THE TABLES ABOVE; e.g., (7F2) INDICATES THAT THE CABLE DESTINATION IS CHASSIS 10700, CONNECTOR F2.

REVISIONS — APPROVED - ; CHECKED - ; DRAWN - TAW 1-21-63; DESIGNED - GAS 12-3-62

REFERENCE DRAWINGS

COMPONENTS (UNLESS OTHERWISE INDICATED): TOLERANCE, VALUE, SIZE — RESISTORS, CAPACITORS

CONTROL DATA CORPORATION

PROJECT OR PRODUCT: 1604-A

TITLE: CABLE CONNECTOR PIN ASSIGNMENTS CHASSIS 10300

DRAWING NUMBER: XDP 214614 G

PAGE 80.3

A2

PIN	
A	
B	T01-T04, pin 1
C	
D	
E	
F	
H	
J	T01-T04, pin 3
K	
L	
M	T01-T04, pin 2
N	
P	
R	

(FUSE PANEL)

B1

PIN	TERM	JACK
A	E401	B01-7
B	E403	B02-7
C	E411	B03-7
D	E413	B04-7
E	E415	B05-7
F	E421	B06-7
H	E423	B07-7
J	E425	B08-7
K	E431	C03-7
L	E433	C04-7
M	E435	C05-7
N	E441	C06-7
P	E443	C07-7
R	E445	C08-7
S	J204	B09-1
T	J214	B09-7
U	J224	B10-1
V	J234	A17-1
W	J244	B11-1
X	J344	A33-1
Y	W248	A38-1
Z	N490	A19-1
a	N491	A26-1
b	GRD	

(3E2)

B2

PIN	TERM	JACK
A	U014	J31-5
B	U015	J31-11
C	U024	J34-5
D	U025	J34-11
E	U034	J35-5
F	U035	J35-11
H	U044	J36-5
J	U045	J36-11
K	U054	J37-5
L	U055	J37-11
M	U064	J38-5
N	U065	J38-11
P	U074	J39-5
R	U075	J39-11
S	U084	J57-5
T	U085	J57-11
U	U094	J65-5
V	U095	J65-11
W	U104	J68-5
X	U105	J68-11
Y	U114	J70-5
Z	U115	J70-11
a	U124	J71-5
b	GRD	

(3C2)

C1

PIN	TERM	JACK
A	I518	A27-12
B	I519	A28-12
C	I520	A29-12
D	I521	A30-12
E	I522	A31-12
F	I523	A32-12
H	V033	M02-9
J	00	J07-5
K	CARD	J07-11
L	S012	D01-2
M	S022	D03-2
N	S032	D05-2
P	S042	E01-2
R	S052	E03-2
S	S062	E05-2
T	S072	F01-2
U	S082	F03-2
V	S092	F05-2
W	S102	G01-2
X	S112	G03-2
Y	S122	G05-2
Z	S132	H01-2
a	S142	H03-2
b	GRD	

(6F2)

C2

PIN	TERM	JACK
A	K040	K12-1
B	K040	K12-2
C	K041	K12-11
D	F534	N16-5
E	K016	017-11
F	J141	K75-1
H	J027	J60-1
J	K016	017-10
K	K016	017-9
L	F566	N07-4
M		
N		
P		
R		
S	V024	L09-1
T	V025	L10-1
U	J900	J17-6
V	J062	J62-9
W		
X		
Y	J900	J17-11
Z		
a		
b	GRD	

(2C2)

D1

PIN	TERM	JACK
A	I518	A27-11
B	I519	A28-11
C	I520	A29-11
D	I521	A30-11
E	I522	A31-11
F	I523	A32-11
H	X184	E82-1
J	X194	E82-7
K	X204	E83-1
L	X214	E83-7
M	X224	E84-1
N	X234	E84-7
P		
R		
S		
T		
U		
V		
W		
X	K942	M68-5
Y	J900	J17-12
Z	00	J07-4
a	CARD	J07-10
b	GRD	

(1E2)

D2

PIN	TERM	JACK
A	S012	D01-12
B	S022	D03-12
C	S032	D05-12
D	S042	E01-12
E	S052	E03-12
F	S062	E05-12
H	S072	F01-12
J	S082	F03-12
K	S092	F05-12
L	S102	G01-12
M	S112	G03-12
N	S122	G05-12
P	S132	H01-12
R	S142	H03-12
S	J040	I01-3
T	J042	I02-3
U	J044	I03-3
V	J046	I04-3
W	J048	I05-3
X	J350	H13-10
Y	J353	H12-12
Z	H994	I06-8
a	H995	I07-8
b	GRD	

(1B2)

E1

PIN	TERM	JACK
A	S012	D01-11
B	S022	D03-11
C	S032	D05-11
D	S042	E01-11
E	S052	E03-11
F	S062	E05-11
H	S072	F01-11
J	S082	F03-11
K	S092	F05-11
L	S102	G01-11
M	S112	G03-11
N	S122	G05-11
P	S132	H01-11
R	S142	H03-11
S	J040	I01-4
T	J042	I02-4
U	J044	I03-4
V	J046	I04-4
W	J048	I05-4
X	J350	H13-11
Y	J353	H12-11
Z	H994	I06-9
a	H995	I07-9
b	GRD	

(2B2)

E2

PIN	TERM	JACK
A	S012	D01-10
B	S022	D03-10
C	S032	D05-10
D	S042	E01-10
E	S052	E03-10
F	S062	E05-10
H	S072	F01-10
J	S082	F03-10
K	S092	F05-10
L	S102	G01-10
M	S112	G03-10
N	S122	G05-10
P	S132	H01-10
R	S142	H03-10
S	J040	I01-5
T	J042	I02-5
U	J044	I03-5
V	J046	I04-5
W	J048	I05-5
X	J350	H13-12
Y	J353	H12-10
Z	H994	I06-10
a	H995	I07-10
b	GRD	

(3B2)

F1

PIN	TERM	JACK
A	S013	D02-12
B	S023	D04-12
C	S033	D06-12
D	S043	E02-12
E	S053	E04-12
F	S063	E06-12
H	S073	F02-12
J	S083	F04-12
K	S093	F06-12
L	S103	G02-12
M	S113	G04-12
N	S123	G06-12
P	S133	H02-12
R	S143	H04-12
S	J041	I01-9
T	J043	I02-9
U	J045	I03-9
V	J047	I04-9
W	J049	I05-9
X	J352	I11-5
Y	J355	H12-5
Z	H996	I08-12
a	H997	I09-12
b	GRD	

(5B2)

F2

PIN	TERM	JACK
A	S013	D02-11
B	S023	D04-11
C	S033	D06-11
D	S043	E02-11
E	S053	E04-11
F	S063	E06-11
H	S073	F02-11
J	S083	F04-11
K	S093	F06-11
L	S103	G02-11
M	S113	G04-11
N	S123	G06-11
P	S133	H02-11
R	S143	H04-11
S	J041	I01-10
T	J043	I02-10
U	J045	I03-10
V	J047	I04-10
W	J049	I05-10
X	J352	I11-6
Y	J355	H12-6
Z	H996	I08-11
a	H997	I09-11
b	GRD	

(6B2)

G1

PIN	TERM	JACK
A	S013	D02-10
B	S023	D04-10
C	S033	D06-10
D	S043	E02-10
E	S053	E04-10
F	S063	E06-10
H	S073	F02-10
J	S083	F04-10
K	S093	F06-10
L	S103	G02-10
M	S113	G04-10
N	S123	G06-10
P	S133	H02-10
R	S143	H04-10
S	J041	I01-11
T	J043	I02-11
U	J045	I03-11
V	J047	I04-11
W	J049	I05-11
X	J352	I11-7
Y	J355	H12-4
Z	H996	I08-10
a	H997	I09-10
b	GRD	

(7B2)

G2

PIN	TERM	JACK
A	S013	D02-9
B	S023	D04-9
C	S033	D06-9
D	S043	E02-9
E	S053	E04-9
F	S063	E06-9
H	S073	F02-9
J	S083	F04-9
K	S093	F06-9
L	S103	G02-9
M	S113	G04-9
N	S123	G06-9
P	S133	H02-9
R	S143	H04-9
S	J041	I01-12
T	J043	I02-12
U	J045	I03-12
V	J047	I04-12
W	J049	I05-12
X	J351	I10-9
Y	J354	H11-9
Z	H996	I08-9
a	H997	I09-9
b	GRD	

(8B2)

H1

PIN	TERM	JACK
A	K090	N72-6
B	K090	N72-5
C	K090	N72-4
D	K093	N73-12
E	U039	L17-1
F	U115	J70-7
H	U135	J72-7
J	U145	J73-7
K	F717	N39-1
L	V856	P32-6
M	V000	J02-12
N	V871	P38-5
P	U125	J71-7
R	N461	N63-7
S	H946	F09-1
T	V008	J06-8
U	V304	K22-8
V		
W	V455	B73-1
X		
Y	J900	J17-10
Z	J900	J17-9
a	U105	J68-7
b	GRD	

(5G2)

H2

PIN	TERM	JACK
A	J354	H11-10
B	J351	I10-10
C	J090	M55-1
D	K762	M61-3
E	J900	J17-2
F	K331	M42-12
H	K044	K14-2
J	K042	K13-2
K	K040	K12-1
L	V186	046-5
M	I518	A27-6
N	I519	A28-6
P	I520	A29-6
R	I521	A30-6
S	I522	A31-6
T	I523	A32-6
U	I618	A53-6
V	I619	A54-6
W	I620	A55-6
X	I621	A56-6
Y	I622	A57-6
Z	I622	A58-6
a	K217	042-11
b	GRD	

(7F1)

I1

PIN	TERM	JACK
A	V005	K02-12
B	V099	K11-8
C	K690	L63-6
D	V094	K06-8
E	V153	084-11
F	V483	N51-10
H	V096	K08-11
J	N880	039-1
K	V005	K02-11
L		
M	K693	N68-11
N	V154	043-10
P	V841	P32-12
R	V096	K08-12
S	K016	017-6
T	V527	M34-11
U	K016	017-7
V	V788	058-8
W	V788	058-8
X		
Y	K550	N76-11
Z	K570	N78-11
a	V871	P38-6
b	GRD	

(5I1)

I2

PIN	TERM	JACK
A	H841	P27-1
B	H856	P30-3
C	H856	P30-4
D	K070	071-3
E	V006	J05-6
F	F652	M39-6
H	K570	N78-3
J	H031	L01-2
K	K540	N74-4
L	K541	N75-4
M	K550	N76-2
N	K551	N77-2
P	K570	N78-1
R	J831	J59-5
S	J833	J59-11
T		
U	H035	L03-3
V	H043	M05-3
W		
X	H071	H83-2
Y	H075	I83-2
Z	Y457	I73-1
a	J135	K36-9
b	GRD	

(3I2)

J1

PIN	TERM	JACK
A	I770	J69-6
B	K663	H72-5
C	V503	M21-4
D	V527	M34-10
E	H004	M04-2
F	V342	K43-10
H	V000	J02-8
J	V346	K48-9
K	H444	N25-10
L	V151	075-10
M	V151	075-9
N	V097	K09-7
P		
R	V004	J04-9
S	V341	K42-6
T	I770	J69-3
U	K713	007-10
V		
W	V306	K24-6
X	V311	K27-10
Y	F566	N07-6
Z	H071	H83-11
a	K071	N71-4
b	GRD	

(3J1)

J2

PIN	TERM	JACK
A	J354	H11-12
B	J351	I10-12
C	F657	M17-7
D	K780	M27-2
E	K090	N72-1
F	F578	J32-1
H	J832	K34-1
J	J834	J15-8
K	H045	M06-5
L	V347	K49-7
M	V561	M30-12
N	V560	M30-6
P	H077	L31-1
R	H031	L01-1
S	J063	J63-9
T	F669	M78-12
U	V033	M02-1
V	V035	M03-1
W	H788	056-10
X	K061	K17-7
Y	V508	M24-11
Z	H856	P30-12
a	J830	J58-1
b	GRD	

(3J2)

J3

PIN	TERM	JACK
A	V788	058-9
B	V155	039-9
C	J067	029-11
D	J067	029-10
E	J067	029-9
F	K064	L15-2
H	J066	N54-8
J	K068	P54-1
K	K069	P54-7
L	J066	N54-6
M	J066	N54-5
N	K712	006-11
P	J259	H11-3
R	H035	L03-4
S	H047	M07-3
T	S012	D01-7
U	S013	D02-7
V	S022	D03-7
W	S023	D04-7
X	H552	L61-12
Y	K695	N69-8
Z		
a		
b	GRD	

(3K3)

K1

PIN	TERM	JACK
A	J139	M43-6
B	K485	K40-5
C	K050	L12-9
D	V006	J05-8
E	H077	L31-10
F	K050	L12-7
H	V347	K49-9
J	H075	I83-11
K	J055	K64-7
L	V002	J03-7
M	U125	J71-11
N	U134	J72-5
P	F567	027-6
R	U135	J72-11
S	K487	P39-5
T	U144	J73-5
U	U145	J73-11
V	J677	L43-1
W	V002	J03-9
X	V002	J03-10
Y	V006	J05-7
Z	00	J07-6
a	CARD	J07-12
b	GRD	

(3K1)

K2

PIN	TERM	JACK
A	V097	K09-8
B	K541	N75-11
C		
D	V787	057-11
E	K487	P39-9
F	K071	N71-11
H	K071	N71-10
J		
K	F566	N07-5
L	F543	N01-5
M	V000	J02-10
N		
P	K487	P39-8
R	F671	M39-7
S	A993	K62-1
T	H039	L05-3
U	K070	071-11
V	K070	071-10
W	K070	071-9
X	K070	071-8
Y		
Z		
a		
b	GRD	

(1I1)

K3

PIN	TERM	JACK
A	Z180	A20-5
B	Z190	A21-5
C	Z200	A22-5
D	Z210	A23-5
E	Z220	A24-5
F	Z230	A25-5
H	S013	D02-4
J	S023	D04-4
K	S033	D06-4
L	S043	E02-4
M	S053	E04-4
N	S063	E06-4
P	S073	F02-4
R	S083	F04-4
S	S093	F06-4
T	S103	G02-4
U	S113	G04-4
V	S123	G06-4
W	S133	H02-4
X	S143	H04-4
Y	H178	025-10
Z	K213	028-7
a	R039	L42-5
b	GRD	

(8F2)

L1

PIN	TERM	JACK
A	K253	N17-12
B	V701	010-10
C	K882	N81-1
D	K883	N81-7
E	I284	N58-7
F	F535	M15-4
H	H175	020-11
J	K769	073-9
K	F436	K73-1
L	F437	L68-1
M	F441	K62-7
N	F443	L69-1
P	F444	L70-1
R	F446	L70-7
S	V472	M51-11
T	F453	L71-1
U	F462	K74-1
V	F463	K73-7
W	F471	L72-1
X	F472	L72-7
Y	F473	L71-7
Z	V096	K08-9
a	V094	K06-12
b	GRD	

(6L1)

L2

PIN	TERM	JACK
A	F474	M72-1
B	F502	M09-1
C	F503	M09-7
D	F509	N16-7
E	F519	M25-7
F	F522	M11-1
H	F523	M11-7
J	F524	M12-1
K	F530	M13-1
L	F531	M13-7
M	F535	M15-1
N	F542	M16-1
P	F544	M16-7
R	F547	N02-7
S	F548	N03-1
T	F853	J74-1
U	F554	N04-1
V	F562	N06-1
W	F563	N06-7
X	F566	N07-1
Y	V152	084-4
Z	K069	P54-12
a	W781	P14-9
b	GRD	

(6L2)

L3

PIN	TERM	JACK
A	V181	034-6
B	V190	052-4
C	H479	K21-1
D	V474	M53-11
E		
F		
H		
J		
K		
L		
M	W144	K78-10
N		
P	H179	030-10
R	V440	N09-7
S	V443	N24-5
T	V443	N24-4
U	V444	N24-9
V	V448	N27-3
W	K606	N42-6
X	V174	014-10
Y	V180	031-12
Z	I770	J69-1
a		
b	GRD	

(8H2)

M1

PIN	TERM	JACK
A	F576	004-1
B	K065	L16-3
C	F597	005-1
D	F437	L68-12
E	F619	K69-7
F	F639	K72-1
H	F639	K72-2
J	F730	K65-1
K	H942	D08-1
L	S013	D02-2
M	S023	D04-2
N	S033	D06-2
P	S043	E02-2
R	S053	E04-2
S	S063	E06-2
T	S073	F02-2
U	S083	F04-2
V	S093	F06-2
W	S103	G02-2
X	S113	G04-2
Y	S123	G06-2
Z	S133	H02-2
a	S143	H04-2
b	GRD	

(6M1)

M2

PIN	TERM	JACK
A		
B	V701	010-5
C		
D	K051	L08-6
E	K217	042-6
F	V308	K25-4
H	V340	K41-7
J	F680	J64-7
K	H012	M76-11
L	H811	P15-12
M	H818	P17-12
N	H820	P20-12
P	H823	P21-12
R	H830	P23-12
S	H833	P24-12
T	H868	P36-12
U	H834	P25-12
V	H845	P29-12
W	H863	P34-12
X		
Y	K017	P13-8
Z	V090	K05-3
a	K017	P13-6
b	GRD	

(3M2)

M3

PIN	TERM	JACK
A	V440	N09-10
B	H171	001-1
C	H171	001-3
D	P059	L30-10
E	U059	L17-10
F	K253	N17-11
H	H781	N47-9
J	H781	N47-8
K	H781	N47-7
L	K714	P65-12
M	K714	P65-11
N	K260	037-12
P	V483	N51-11
R	H483	N46-2
S	V487	P43-6
T	K636	004-7
U	K253	N17-9
V	K713	007-5
W		
X		
Y		
Z		
a		
b	GRD	

(3M3)

N1

PIN	TERM	JACK
A	F656	K65-7
B	F672	K64-1
C	J112	L07-1
D	H039	L05-2
E	H047	M07-2
F	W780	P14-1
H	J087	029-6
J	V705	013-12
K	K712	006-2
L	K712	006-3
M	K152	L57-6
N	K153	L57-12
P	K154	L56-6
R	K155	L56-12
S		
T	H441	N20-11
U	K050	L12-3
V	K050	L12-6
W	K713	007-2
X	F534	N16-4
Y	J900	J17-8
Z	H789	N70-2
a	H845	P29-3
b	GRD	

(6M2)

N2

PIN	TERM	JACK
A	K053	L13-10
B	K053	L13-9
C	V705	013-10
D	V000	J02-7
E		
F		
H	K541	N75-11
J	F543	N01-6
K	K487	P39-11
L	K487	P39-10
M		
N		
P	V341	K42-10
R		
S	K675	I82-12
T		
U	J008	K55-1
V	J009	K55-7
W	K026	K57-1
X	K029	K58-11
Y		
Z		
a		
b	GRD	

2J1

N3

PIN	TERM	JACK
A	U014	J31-1
B	U024	J34-1
C	U034	J35-1
D	U044	J36-1
E	U054	J37-1
F	U064	J38-1
H	U074	J39-1
J	U084	J57-1
K	U094	J65-1
L	U104	J68-1
M	U114	J70-1
N	U124	J71-1
P	U134	J72-1
R	U144	J73-1
S	U015	J31-7
T	U025	J34-7
U	U035	J35-7
V	U045	J36-7
W	U055	J37-7
X	U065	J38-7
Y	U075	J39-7
Z	U085	J57-7
a	U095	J65-7
b	GRD	

(5F2)

O1

PIN	TERM	JACK
A	R039	L42-1
B	K212	028-6
C	K744	M38-5
D	K767	M65-12
E	J094	M62-1
F		
H	K766	M65-4
J	K766	M65-5
K	K081	065-11
L	K081	065-10
M	V444	N24-12
N	R039	L42-6
P	K016	017-8
R		
S	00	J07-5
T	CARD	J07-11
U		
V		
W		
X		
Y		
Z	V482	M63-1
a		
b	GRD	

(8C2)

O2

PIN	TERM	JACK
A	P039	L30-1
B	H185	036-12
C	H183	035-12
D	H478	N66-12
E	J062	J62-5
F	F652	M39-1
H	F652	M39-2
J	V190	052-6
K	N088	073-11
L	U014	J31-4
M	U015	J31-10
N	U024	J34-4
P	U025	J34-10
R	F626	M81-1
S	F627	M81-7
T	V705	013-11
U	F661	K63-1
V	F662	K63-7
W	H000	J01-2
X	H000	J01-3
Y	H000	J01-4
Z	F682	N83-1
a	K065	L16-5
b	GRD	

(6N1)

O3

PIN	TERM	JACK
A	V155	039-10
B	I250	N59-2
C	I250	N59-3
D	I250	N59-4
E	V787	057-9
F	V787	057-10
H	J061	002-1
J	J066	N54-1
K	J067	029-12
L	H090	J08-2
M	H090	J08-3
N	H094	J09-2
P	H099	J14-1
R	V350	K50-11
S	V351	K51-4
T	I241	K54-12
U	K217	042-3
V	K253	N17-7
W	I290	N63-2
X	J087	029-5
Y	K663	H72-9
Z	H474	N57-11
a		
b	GRD	

(603)

P1

PIN	TERM	JACK
A	H178	025-11
B	H179	030-11
C	V440	N09-11
D	V440	N09-8
E	V441	N21-5
F	V442	N21-11
H		
J	K604	N41-6
K	V174	014-11
L	V180	031-11
M	J837	038-6
N	V190	052-5
P	V187	046-11
R	V177	024-3
S	K253	N17-8
T	V178	024-11
U	V477	M73-5
V	J846	037-1
W	J834	J15-12
X	J832	K34-5
Y	V176	021-10
Z		
a	V476	M59-11
b	GRD	

(7K3)

NOTE:
CABLE DESTINATIONS ARE SHOWN BELOW THE TABLES ABOVE; e.g., (3G1) INDICATES THAT THE CABLE DESTINATION IS CHASSIS 10300, CONNECTOR G1.

REV. | AUTH. | DATE | REQ. | DRFT. | CHK. | APPROVED — REVISIONS

DESIGNED · DRAWN TAW 3-20-63 · CHECKED 4-4-63 · APPROVED

REFERENCE DRAWINGS

COMPONENTS (UNLESS OTHERWISE INDICATED) — TOLERANCE | VALUE | SIZE — RESISTORS — CAPACITORS

TITLE: CABLE CONNECTOR PIN ASSIGNMENTS CHASSIS 10400

CONTROL DATA CORPORATION

PROJECT OR PRODUCT: 1604-A

DRAWING NUMBER: XDP 214615 G

PAGE 80.4

A2

PIN	
A	
B	T01-T04, pin 1
C	
D	
E	
F	
H	
J	T01-T04, pin 3
K	
L	
M	T01-T04, pin 2
N	
P	
R	

(FUSE PANEL)

B1

PIN	TERM	JACK
A	E500	B01-1
B	E502	B02-1
C	E510	B03-1
D	E512	B04-1
E	E514	B05-1
F	E520	B06-1
H	E522	B07-1
J	E524	B08-1
K	E530	C03-1
L	E532	C04-1
M	E534	C05-1
N	E540	C06-1
P	E542	C07-1
R	E544	C08-1
S	J205	B09-1
T	J215	B09-7
U	J225	B10-1
V	J235	A17-1
W	J245	B11-1
X	J345	A33-1
Y	W258	A38-1
Z	N590	A19-1
a	N591	A26-1
b	GRD	

(3F1)

B2

PIN	TERM	JACK
A	E550	B77-1
B	E552	B78-1
C	E560	B79-1
D	E562	B80-1
E	E564	B81-1
F	E570	B82-1
H	E572	B83-1
J	E574	B84-1
K	E580	C79-1
L	E582	C80-1
M	E584	C81-1
N	E590	C82-1
P	E592	C83-1
R	E594	C84-1
S	J255	B74-1
T	J265	B74-7
U	J275	B75-1
V	Y285	A68-1
W	J295	B76-1
X	J365	A52-1
Y	W259	A51-1
Z	N594	A66-1
a	N595	A59-1
b	GRD	

(4F1)

C1

PIN	TERM	JACK
A	U240	J03-6
B	U250	K03-6
C	U260	L03-6
D	U270	M03-6
E	U280	N03-6
F	U290	O03-6
H	J115	O81-11
J	J115	O81-10
K	J115	O81-9
L	J115	O81-8
M	J116	O82-12
N	J116	O82-11
P	J116	O82-10
R	J116	O82-9
S	J116	O82-8
T		
U		
V		
W		
X		
Y		
Z		
a		
b	GRD	

(1L1)

C2

PIN	TERM	JACK
A	U003	J04-11
B	U013	K04-11
C	U023	L04-11
D	U033	M04-11
E	U043	N04-11
F	U053	O04-11
H	U063	J33-11
J	U073	K33-11
K	U083	L33-11
L	U093	M33-11
M	U103	N33-11
N	U113	O33-11
P	U123	J59-11
R	U133	K59-11
S	U143	L59-11
T		
U		
V		
W		
X		
Y		
Z	OO CARD	K76-3
a		K76-9
b	GRD	

(1C2)

D1

PIN	TERM	JACK
A	I624	A53-11
B	I625	A54-11
C	I626	A55-11
D	I627	A56-11
E	I628	A57-11
F	I629	A58-11
H	X244	D01-1
J	X254	D01-7
K	X264	D02-1
L	X274	D02-7
M	X284	D03-1
N	X294	D03-7
P	J610	N39-2
R	J620	N39-8
S	J630	N38-2
T	J640	N38-8
U	J650	N37-2
V	J660	N37-8
W	H967	K65-1
X	J145	O76-7
Y		
Z	N454	M39-2
a	N354	M38-2
b	GRD	

(2D1)

D2

PIN	TERM	JACK
A	Z242	A60-5
B	Z252	A61-5
C	Z262	A62-5
D	Z272	A63-5
E	Z282	A64-5
F	Z292	A65-5
H	I524	A27-9
J	I525	A28-9
K	I526	A29-9
L	I527	A30-9
M	I528	A31-9
N	I529	A32-9
P	I838	K07-1
R	I839	K07-7
S	I840	K08-1
T	I841	K08-7
U	I842	K10-1
V	I843	K10-7
W	I844	L07-1
X	I845	L07-7
Y	I846	L08-1
Z	I847	L08-7
a	I848	L10-1
b	GRD	

(8I1)

E1

PIN	TERM	JACK
A	U360	J58-4
B	U370	K58-4
C	U380	L58-4
D	Y555	B73-1
E	TIE PT.	J76-1
F		J76-2
H		J76-3
J	OO CARD	K76-4
K		K76-10
L	I524	A27-6
M	I525	A28-6
N	I526	A29-6
P	I527	A30-6
R	I528	A31-6
S	I529	A32-6
T	I624	A53-6
U	I625	A54-6
V	I626	A55-6
W	I627	A56-6
X	I628	A57-6
Y	I629	A58-6
Z		
a		
b	GRD	

(7C1)

E2

PIN	TERM	JACK
A	U003	J04-8
B	U013	K04-8
C	U023	L04-8
D	U033	M04-8
E	U043	N04-8
F	U053	O04-8
H	U063	J33-8
J	U073	K33-8
K	U083	L33-8
L	U093	M33-8
M	U102	N34-6
N	N054	K16-12
P	N054	K16-11
R	N054	K16-10
S	N054	K16-9
T	N054	K16-8
U	N054	K16-7
V	N054	K16-6
W	N054	K16-5
X	N154	L16-12
Y	N154	L16-11
Z	N154	L16-10
a	N154	L16-9
b	GRD	

(2I1)

F1

PIN	TERM	JACK
A	U063	J33-4
B	U062	J34-4
C	U073	K33-4
D	U072	K34-4
E	U083	L33-4
F	U082	L34-4
H	U093	M33-4
J	U092	M34-4
K	W340	P55-12
L	W340	P55-11
M	W340	P55-10
N	W340	P55-9
P	W340	P55-8
R	W340	P55-7
S	W341	P56-12
T	W341	P56-11
U	W341	P56-10
V	W341	P56-9
W	W341	P56-8
X	W341	P56-7
Y	I212	J77-4
Z	I213	K77-4
a	I214	L77-4
b	GRD	

(2I2)

F2

PIN	TERM	JACK
A	U013	K04-5
B	U023	L04-5
C	U033	M04-5
D	U043	N04-5
E	U053	O04-5
F	U063	J33-5
H	U073	K33-7
J	U083	L33-5
K	U093	M33-5
L	U103	N33-5
M	U113	O33-5
N	U123	J59-5
P	U133	K59-5
R	U143	L59-5
S	U012	K05-8
T	U022	L05-8
U	U032	M05-8
V	U042	N05-8
W	U052	O05-8
X	U062	J34-8
Y	U072	K34-7
Z	U082	L34-8
a	U092	M34-8
b	GRD	

(4N3)

G1

PIN	TERM	JACK
A	N570	L62-11
B	N570	L62-10
C	N570	L62-12
D		
E	OO CARD	K76-5
F		K76-11
H	I200	J22-5
J		
K	H970	O71-3
L	U142	L60-6
M	N670	O61-12
N	N570	L62-8
P	N570	L62-9
R		
S		
T		
U		
V		
W		
X	R166	J38-6
Y		
Z	K603	J65-11
a		
b	GRD	

(3I1)

G2

PIN	TERM	JACK
A	J320	P45-1
B	J321	P41-1
C	J322	P40-1
D	J323	P36-1
E	U009	L84-6
F	U112	O34-8
H	U132	K60-8
J	U142	L60-8
K	F718	P15-5
L	K602	J64-2
M	K602	J64-3
N	K453	O79-7
P	U122	J60-8
R	H961	N66-8
S	K603	J65-10
T	H965	L71-4
U	H965	L71-5
V		
W	Y557	I73-1
X		
Y	J903	J84-1
Z	J904	K84-1
a	U102	N34-8
b	GRD	

(4H1)

H1

PIN	TERM	JACK
A	H964	K71-1
B	H964	K71-2
C	H965	L71-2
D	H965	L71-3
E	H977	M09-2
F	N070	L56-1
H	N170	M56-1
J	N270	N56-1
K	H972	O75-9
L	N470	J62-1
M	H970	O71-1
N	H970	O71-2
P		
R	H960	M66-2
S	H961	N66-1
T	W010	O58-1
U	W011	O58-7
V	W012	O57-7
W	N670	O61-7
X	N670	O61-8
Y	N670	O61-9
Z	N670	O61-10
a	U143	L59-7
b	GRD	

(3H1)

H2

PIN	TERM	JACK
A	H950	L61-4
B	H952	N61-2
C	H952	N61-3
D	H954	J66-1
E	H954	J66-2
F	H954	J66-3
H	H960	M66-1
J	H960	M66-3
K	H960	M66-4
L	H951	M61-2
M	H951	M61-3
N	H955	K66-3
P	H955	K66-2
R	H961	N66-2
S	H961	N66-3
T	H961	N66-4
U	H952	N61-1
V	H962	O66-2
W	H962	O66-3
X	H963	J71-1
Y	H963	J71-2
Z	H963	J71-3
a		
b	GRD	

(3H2)

I1

PIN	TERM	JACK
A	H950	L61-1
B	H950	L61-2
C	J691	L10-7
D	H955	K66-1
E	K452	O79-1
F	K603	J65-3
H	H957	L66-1
J	H972	O75-7
K	H962	O66-4
L		
M	H972	O75-3
N	H965	L71-1
P	H950	L61-3
R	H977	M09-1
S	I182	M08-7
T	H970	O71-4
U	I181	M08-1
V	H972	O75-1
W	H955	K66-4
X		
Y	J600	N11-1
Z	J700	N10-1
a	H962	O66-1
b	GRD	

(4I1)

I2

PIN	TERM	JACK
A	F704	P21-7
B	F701	O11-5
C	F702	P25-7
D	F703	O10-12
E	J312	P70-1
F	H957	L66-9
H	H957	L66-8
J	H977	M09-9
K	H977	M09-8
L		
M		
N	J315	P71-7
P	U701	O60-12
R	U707	O63-12
S		
T	N057	M21-12
U	N057	M21-11
V	N057	M21-10
W	N057	M21-9
X	N057	M21-8
Y	N157	N21-12
Z	U300	J32-3
a	U310	K32-3
b	GRD	

(6I2)

J1

PIN	TERM	JACK
A	U320	L32-3
B	U330	M23-3
C	U340	N32-3
D	U350	O32-3
E	U360	J58-3
F	U370	K58-3
H	U380	L58-3
J	U003	J04-7
K	U013	K04-7
L	U023	L04-7
M	U033	M04-7
N	U043	N04-7
P	U053	O04-7
R	U063	J33-7
S	U073	K33-5
T	U083	L33-7
U	U093	M33-7
V	U103	N33-7
W	U113	O33-8
X	U123	J59-8
Y	U133	K59-6
Z	U143	L59-8
a	U002	J05-11
b	GRD	

(6J1)

J2

PIN	TERM	JACK
A	U012	K05-11
B	U022	L05-11
C	U032	M05-11
D	U042	N05-11
E	U052	O05-11
F	U062	J34-11
H	U072	K34-11
J	U082	L34-11
K	U092	M34-11
L	U102	N34-11
M	U112	O34-11
N	U122	J60-11
P	U132	K60-11
R	U142	L60-11
S	U004	J07-5
T	U004	J07-6
U	TIE PT.	J76-1
V		J76-2
W		J76-3
X		
Y		
Z		
a		
b	GRD	

(6J2)

K1

PIN	TERM	JACK
A	U133	K59-5
B		
C		
D		
E		
F		
H	U360	J58-5
J	U370	K58-5
K	U380	L58-5
L	F701	O11-1
M	F702	P25-1
N	F703	O10-1
P	F704	P21-1
R	F705	O09-1
S	F706	P20-1
T		
U		
V		
W		
X		
Y		
Z		
a		
b	GRD	

(6K1)

K2

PIN	TERM	JACK
A		
B	F704	P21-8
C	F704	P21-5
D	F702	P25-8
E	F702	P25-5
F	F703	O10-5
H	U240	J03-4
J	U250	K03-4
K	U260	L03-4
L	U270	M03-4
M		
N	U707	O63-10
P	U300	J32-4
R	U310	K32-4
S	U320	L32-4
T	U330	M32-4
U	U340	N32-4
V	U350	O32-4
W		
X	H955	K66-9
Y	H955	K66-8
Z	OO CARD	K76-6
a		K76-12
b	GRD	

(6K2)

L1

PIN	TERM	JACK
A	M800	H01-1
B	M801	H02-1
C	M802	H03-1
D	M803	H04-1
E	M804	H05-1
F	M805	H06-1
H	M806	H07-1
J	M807	H08-1
K	M808	H09-1
L	M809	H10-1
M	M810	H11-1
N	M811	H12-1
P	M812	H82-1
R	M813	H83-1
S	M814	H84-1
T	L800	E01-3
U	L801	E02-3
V	L802	E03-3
W	L803	E04-3
X	L804	E05-3
Y	L805	E06-3
Z	L806	E07-3
a	L807	E77-3
b	GRD	

(CONSOLE J20318)

L2

PIN	TERM	JACK
A	M815	H01-5
B	M816	H02-5
C	M817	H03-5
D	M818	H04-5
E	M819	H05-5
F	M820	H06-5
H	M821	H07-5
J	M822	H08-5
K	M823	H09-5
L	M824	H10-5
M	M825	H11-5
N	M826	H12-5
P	M827	H82-5
R	M828	H83-5
S	M829	H84-5
T	L815	E01-7
U	L816	E02-7
V	L817	E03-7
W	L818	E04-7
X	L819	E05-7
Y	L820	E06-7
Z	L821	E07-7
a	L822	E77-7
b	GRD	

(CONSOLE J20319)

M1

PIN	TERM	JACK
A	M830	H01-9
B	M831	H02-9
C	M832	H03-9
D	M833	H04-9
E	M834	H05-9
F	M835	H06-9
H	M836	H07-9
J	M837	H08-9
K	M838	H09-9
L	M839	H10-9
M	M840	H11-9
N	M841	H12-9
P	M842	H82-9
R	M843	H83-9
S	M844	H84-9
T	L830	E01-11
U	L831	E02-11
V	L832	E03-11
W	L833	E04-11
X	L834	E05-11
Y	L835	E06-11
Z	L836	E07-11
a	L837	E77-11
b	GRD	

(CONSOLE J20320)

M2

PIN	TERM	JACK
A	M845	F01-1
B	M846	F02-1
C	M847	F03-1
D	M848	F04-1
E	M849	F05-1
F	M850	F06-1
H	M851	F07-1
J	M852	F77-1
K	M853	F78-1
L	M854	F79-1
M	M855	F80-1
N	M856	F81-1
P	M857	F82-1
R	M858	F83-1
S	M859	F84-1
T	L845	G01-3
U	L846	G02-3
V	L847	G03-3
W	L848	G04-3
X	L849	G05-3
Y	L850	G06-3
Z	L851	G07-3
a	L852	G77-3
b	GRD	

(CONSOLE J20321)

N1

PIN	TERM	JACK
A	M860	F01-5
B	M861	F02-5
C	M862	F03-5
D	M863	F04-5
E	M864	F05-5
F	M865	F06-5
H	M866	F07-5
J	M867	F77-5
K	M868	F78-5
L	M869	F79-5
M	M870	F80-5
N	M871	F81-5
P	M872	F82-5
R	M873	F83-5
S	M874	F84-5
T	L860	G01-7
U	L861	G02-7
V	L862	G03-7
W	L863	G04-7
X	L864	G05-7
Y	L865	G06-7
Z	L866	G07-7
a	L867	G77-7
b	GRD	

(CONSOLE J20322)

N2

PIN	TERM	JACK
A	M875	F01-9
B	M876	F02-9
C	M877	F03-9
D	M878	F04-9
E	M879	F05-9
F	M880	F06-9
H	M881	F07-9
J	M882	F77-9
K	M883	F78-9
L	M884	F79-9
M	M885	F80-9
N	M886	F81-9
P	M887	F82-9
R	M888	F83-9
S	M889	F84-9
T	L875	G01-11
U	L876	G02-11
V	L877	G03-11
W	L878	G04-11
X	L879	G05-11
Y	L880	G06-11
Z	L881	G07-11
a	L882	G77-11
b	GRD	

(CONSOLE J20323)

O1

PIN	TERM	JACK
A	L808	E78-3
B	L809	E79-3
C	L810	E80-3
D	L811	E81-3
E	L812	E82-3
F	L813	E83-3
H	L814	E84-3
J	L823	E78-7
K	L824	E79-7
L	L825	E80-7
M	L826	E81-7
N	L827	E82-7
P	L828	E83-7
R	L829	E84-7
S	L838	E78-11
T	L839	E79-11
U	L840	E80-11
V	L841	E81-11
W	L842	E82-11
X	L843	E83-11
Y	L844	E84-11
Z	L853	G78-3
a	L854	G79-3
b	GRD	

(CONSOLE J20324)

O2

PIN	TERM	JACK
A	L855	G80-3
B	L856	G81-3
C	L857	G82-3
D	L858	G83-3
E	L859	G84-3
F	L868	G78-7
H	L869	G79-7
J	L870	G80-7
K	L871	G81-7
L	L872	G82-7
M	L873	G83-7
N	L874	G84-7
P	L883	G78-11
R	L884	G79-11
S	L885	G80-11
T	L886	G81-11
U	L887	G82-11
V	L888	G83-11
W	L889	G84-11
X	L700	I75-3
Y	L701	I75-7
Z	L702	I75-11
a	L703	I76-3
b	GRD	

(CONSOLE J20325)

P1

PIN	TERM	JACK
A	L704	I76-7
B	L705	I76-11
C	L706	I77-3
D	L707	I77-7
E	L708	I77-11
F	L709	I78-3
H	L710	I78-7
J	L711	I78-11
K	L712	I79-3
L	L713	I79-7
M	L714	I79-11
N	M700	I01-1
P	M701	I01-5
R	M702	I01-9
S	M703	I02-1
T	M704	I02-5
U	M705	I02-9
V	M706	I03-1
W	M707	I03-5
X	M708	I03-9
Y	M709	I04-1
Z	M710	I04-5
a	M711	I04-9
b	GRD	

(CONSOLE J20326)

NOTE:
CABLE DESTINATIONS ARE SHOWN BELOW THE TABLES ABOVE; e.g., (3G1) INDICATES THAT THE CABLE DESTINATION IS CHASSIS 10300, CONNECTOR G1.

REVISIONS: REV. | AUTH. | DATE | REG. DWN. | CHK. | APPROVED

DESIGNED - | DRAWN - TAW 3-28-63 | CHECKED - 4-5-63 | APPROVED -

REFERENCE DRAWINGS

COMPONENTS (UNLESS OTHERWISE INDICATED): TOLERANCE | VALUE | SIZE — RESISTORS — CAPACITORS

TITLE: CABLE CONNECTOR PIN ASSIGNMENTS CHASSIS 10500

CONTROL DATA CORPORATION

PROJECT OR PRODUCT: 1604-A

DRAWING NUMBER: XDP 214616

A2

PIN	
A	
B	T01-T04, pin 1
C	
D	
E	
F	
H	
J	T01-T04, pin 3
K	
L	
M	T01-T04, pin 2
N	
P	
R	

(FUSE PANEL)

PIN	B1 TERM	B1 JACK	B2 TERM	B2 JACK	C1 TERM	C1 JACK	C2 TERM	C2 JACK	D1 TERM	D1 JACK	D2 TERM	D2 JACK
A	E600	B01-1	E650	B77-1	J194	N56-10	P000	J20-11	I530	A27-11	P001	J21-11
B	E602	B02-1	E652	B78-1	J196	N60-10	P010	J22-11	I531	A28-11	P011	J23-11
C	E610	B03-1	E660	B79-1	K735	056-11	P020	J24-11	I532	A29-11	P021	J25-11
D	E612	B04-1	E662	B80-1	K743	060-11	P030	J27-11	I533	A30-11	P031	J28-11
E	E614	B05-1	E664	B81-1	J078	P44-1	P040	J29-11	I534	A31-11	P041	J30-11
F	E620	B06-1	E670	B82-1	J082	P46-1	P050	J31-11	I535	A32-11	P051	J32-11
H	E622	B07-1	E672	B83-1			P060	J34-11	X304	D01-1	P061	J35-11
J	E624	B08-1	E674	B84-1	J510	M78-2	P070	J36-11	X314	D01-7	P071	J37-11
K	E630	C03-1	E680	C79-1	J974	M74-1	P080	J38-11	X324	D02-1	P081	J39-11
L	E632	C04-1	E682	C80-1			P090	J41-11	X334	D02-7	P091	J42-11
M	E634	C05-1	E684	C81-1	J508	M83-1	P100	J43-11	X344	D03-1	P101	J44-11
N	E640	C06-1	E690	C82-1	Z300	A20-5	P110	J45-11	X354	D03-7	P111	J46-11
P	E642	C07-1	E693	C83-1	W835	K12-6	P120	J48-11	U090	M30-1	P121	J49-11
R	E644	C08-1	E694	C84-1	Z310	A21-5	P130	J50-11	U100	M31-1	P131	J51-11
S	J206	B09-1	J256	B74-1	Z320	A22-5	P140	J52-11	U110	M32-1	P141	J53-11
T	J216	B09-7	J266	B74-7	Z330	A23-5	A985	H08-11	U060	M27-1	U000	M20-1
U	J226	B10-1	J276	B75-1	Z340	A24-5	A985	H08-7	U070	M28-1	U010	M21-1
V	J236	A17-1	J286	A68-1	Z350	A25-5	Q984	H11-1	U080	M29-1	U020	M22-1
W	J246	B11-1	J298	B76-1	I530	A27-9	Q985	H11-7	J124	K21-7	U030	M23-1
X	J346	A33-1	J366	A52-1	I531	A28-9	F348	J62-12	J124	K21-8	U040	M24-1
Y	W268	A38-1	W269	A51-1	J504	M70-8	F349	K08-12	I198	L48-5	U050	M25-1
Z	N690	A19-1	N694	A66-1	I532	A29-9	A987	J08-11	J028	L37-1	J812	J60-6
a	N691	A26-1	N695	A59-1	I533	A30-9	K232	L50-2	J812	J60-5	P000	J20-6
b	GRD		GRD		GRD		GRD		GRD		GRD	
	(3F2)		(4F2)		(8I2)		(1D1)		(2E2)		(1C1)	

PIN	E1 TERM	E1 JACK	E2 TERM	E2 JACK	F1 TERM	F1 JACK	F2 TERM	F2 JACK	G1 TERM	G1 JACK	G2 TERM	G2 JACK
A	V026	M59-1	U120	M34-1	U390	N20-3	U180	M41-1	U420	N27-3	F123	N11-12
B	J020	H01-1	U130	M35-1	U400	N22-3	U190	M42-1	U430	N29-3	F123	N11-11
C	J021	H01-7	U140	M36-1	U410	N24-3	U200	M43-1	U440	N30-3	F104	N05-5
D	J022	H02-1	U150	M37-1	J072	045-1	U210	M44-1	U450	N32-3	F125	N12-12
E	J023	H02-7	U160	M38-1	K722	051-5	U220	M45-1	U460	N33-3	F125	N12-11
F	J024	H03-1	U170	M39-1	K891	P14-12	U230	M46-1	U470	N35-3	F125	N12-10
H	J025	H03-7	P010	J22-7	J191	N52-6	H966	L32-1	R907	M63-1	F125	N12-9
J	V051	L66-3	P020	J24-7	J504	M70-1	00	J09-4	K034	M57-5	F116	M14-6
K	A984	H08-2	P030	J27-7	W164	L76-1	CARD	J09-10	K718	M54-8	F116	M14-5
L	A985	H08-8	P040	J29-7	J505	M71-1	P011	J23-8	K716	M52-8	F107	N08-6
M	Q984	H11-2	P050	J31-7			P021	J25-8	I534	A31-9	F107	N08-5
N	Q985	H11-8	P060	J34-7	J506	M72-1	P031	J28-8	I535	A32-9	F300	L01-12
P	W772	L29-1	P070	J36-7	K145	065-8	P041	J30-8	Y657	I73-1	F327	L11-12
R	W771	L28-9	P080	J38-7	J507	M73-1	P051	J32-8	J074	046-1	U415	P17-4
S	W773	L27-10	P090	J41-7	K893	P15-12	P061	J35-8	W822	N37-9	F360	K10-6
T	F110	K05-9	P100	J43-7	K895	P36-12	P071	J37-8	W824	N38-9	F381	K09-6
U	F110	K05-10	P110	J45-7	J531	L84-12	P081	J39-8	W826	N39-9	F122	N10-12
V	J150	K62-1	P120	J48-7	J076	047-1	P091	J42-8	K727	052-10	F326	L11-6
W	J150	K62-2	P130	J50-7	K730	055-5	P101	J44-8	J192	N52-12	F324	L10-6
X	K338	G02-1	P140	J52-7	J193	N56-4	P111	J46-8	K034	M57-6	F325	L10-12
Y	K508	D09-1	P400	J04-5	J080	P45-1	I329	J79-8	J517	M78-7	F323	N15-10
Z	K753	062-7	P401	J04-11	K738	059-5	P131	J51-8	K136	M56-1	V415	L66-7
a	K752	062-1	P031	J28-6	J195	N60-4	P141	J53-8	J510	M78-1	H953	L22-3
b	GRD		GRD		GRD		GRD		GRD		GRD	
	(2C1)		(3C1)		(7C2)		(4C1)		(8C1)		(3K2)	

PIN	H1 TERM	H1 JACK	H2 TERM	H2 JACK	H3 TERM	H3 JACK	I1 TERM	I1 JACK	I2 TERM	I2 JACK	I3 TERM	I3 JACK
A	F310	L05-5	F303	L03-6	J054	J84-1	F382	J03-1	F912	H06-1	W831	L09-5
B	F331	L12-12	H051	L64-1	J097	K60-7	F384	J03-7	F913	H06-7	W832	L09-11
C	F331	L12-11	F300	L01-9	J056	K60-1			F914	H07-1	W833	M09-5
D	F330	L13-12	F323	N15-11	L072	L31-3	H596	K57-1	F915	H07-7	W834	M09-11
E	F330	L13-11	F332	L14-11	L076	L31-7	I253	J02-7	U455	P28-8	W835	K12-5
F	F324	L10-4	J068	H83-8	L076	L31-11	F392	J08-1	N357	L20-1	W836	K12-11
H	F103	N04-8	F350	K06-5	I399	K24-1	F100	N01-7	N457	L21-1	I328	J79-1
J	F105	N06-7	F300	L01-8	I399	K24-2	F101	N02-6	N377	023-1	I334	J76-1
K	F105	N06-6	F324	L10-5	I399	K24-3	F102	N03-5	N477	024-1	I338	J74-1
L	F320	L08-6	F302	L02-12	I399	K24-4	F102	N03-11			I342	J72-1
M	F353	K07-11			I399	K24-5	H928	L17-1			I393	048-2
N	F326	L11-4	F392	J08-6	J143	L59-1	F122	N10-8	U426	P21-4	J530	L83-1
P	I255	N83-7	F122	N10-11	I398	039-6			U704	L49-3	J530	L83-3
R	F327	L11-11	F122	N10-10			F310	L05-3	K238	L54-1	J530	L83-5
S	F382	J03-5	P041	J30-6	I367	M76-7	J812	J60-1			I171	E01-1
T	F323	N15-12	P051	J32-6			P131	J51-7	U001	M20-12	I172	E02-1
U	F320	L08-5	P061	J35-6			P141	J53-7	U011	M21-12	I173	E03-1
V	F300	L01-10	P071	J37-6			P000	J20-8	U021	M22-12	I174	E04-1
W	W773	L27-9	P081	J39-6			J770	L27-1	U031	M23-12	I175	E05-1
X	U704	L49-12	P091	J42-6			F675	H04-7	U041	M24-12	I176	E06-1
Y	F301	L02-6	P101	J44-6			F910	H05-6	U051	M25-12	I177	E07-1
Z	F123	N11-10	P111	J46-6			W771	L28-7	U061	M27-12	I178	E08-1
a	K775	P38-4	P121	J49-6			H852	I76-1	U071	M28-12	I179	E09-1
b	GRD		GRD		GRD		GRD		GRD		GRD	
	(3L1)		(3L2)		(8I3)		(3M1)		(5I2)		(7H3)	

PIN	J1 TERM	J1 JACK	J2 TERM	J2 JACK	J3 TERM	J3 JACK	K1 TERM	K1 JACK	K2 TERM	K2 JACK	K3 TERM	K3 JACK
A	U081	M29-12	P011	J23-2	I369	J33-1	K584	J59-1			I377	K26-2
B	U091	M30-12	P021	J25-2	I370	J40-1			F700	J15-11	I377	K26-3
C	U101	M31-12	P031	J28-2	I370	J40-2			F700	J15-10	I378	L47-1
D	U111	M32-12	P041	J30-2	I371	K28-1			F707	J11-12	I378	L47-2
E	U121	M34-12	P051	J32-2	I371	K28-2			J025	H03-11	I378	L47-3
F	U131	M35-12	P061	J35-2	I371	K28-3			F707	J11-11	I379	L58-1
H	U141	M36-12	P071	J37-2	I371	K28-4	M712	I02-3	I834	L04-6	I380	M16-1
J	P000	J20-2	P081	J39-2	I372	K31-1	M713	I02-7	I835	L04-12	I380	M16-2
K	P010	J22-2	P091	J42-2	I372	K31-2	M714	I02-11	I836	K15-6	I381	M17-1
L	P020	J24-2	P101	J44-2	I372	K31-3	U410	N24-10	I837	K15-12	I382	M26-1
M	P030	J27-2	P111	J46-2	I372	K31-4	U410	N24-9			I382	M26-2
N	P040	J29-2	P121	J49-2	I373	K33-1	U410	N24-8	K246	L40-1	I382	M26-3
P	P050	J31-2	P131	J51-2	I373	K33-2	U411	N25-10	I530	A27-12	I383	M33-1
R	P060	J34-2	P141	J53-2	I373	K33-3	U411	N25-9	I531	A28-12	I383	M33-2
S	P070	J36-2	K075	P31-8	I373	K33-4	U411	N25-8	I532	A29-12	I383	M33-3
T	P080	J38-2	K074	P31-2	I374	K38-1			I533	A30-12	I383	M33-4
U	P090	J41-2	L071	G03-3	I374	K38-2			I534	A31-12	I383	M33-5
V	P100	J43-2	L073	G03-7	I374	K38-3			I535	A32-12	I384	M69-1
W	P110	J45-2	L075	G03-11	I375	K40-1					I384	M69-2
X	P120	J48-2			I375	K40-2			N355	020-1	I384	M69-3
Y	P130	J50-2			I376	K45-1			N455	021-1	I385	M82-1
Z	P140	J52-2			I376	K45-2			00	J09-3	I386	N26-1
a	P001	J21-2			I377	K26-1			CARD	J09-9	I388	N53-1
b	GRD		GRD		GRD		GRD		GRD		GRD	
	(5J1)		(5J2)		(8K3)		(5K1)		(5K2)		(8L3)	

PIN	L1 TERM	L1 JACK	L2 TERM	L2 JACK	L3 TERM	L3 JACK	M1 TERM	M1 JACK	M2 TERM	M2 JACK	M3 TERM	M3 JACK
A	N559	P40-3	F004	005-8	I530	A27-6	F371	K13-11	F342	K02-5	I388	N53-2
B	H780	N61-1	F333	L15-6	I531	A28-6	W159	L62-8	F317	L07-12	I388	N53-3
C	K783	040-9	F351	K06-12	I532	A29-6	F370	K13-5	P304	J60-12	I389	N57-1
D	W164	L76-5	F361	K10-12	I533	A30-6	F343	K02-11	K137	M56-12	I389	N57-2
E	F390	J07-8	N967	L16-12	I534	A31-6	F316	L07-6	K136	M56-6	I391	035-1
F	K716	M52-2	F313	L05-12	I535	A32-6	F100	N01-6	J148	M62-12	I392	044-1
H	N559	P40-1	F343	K02-12	I630	A53-6	F007	008-10	I286	J05-7	0700	009-1
J	V459	N62-6	F313	L05-11	I631	A54-6	U390	N20-7	F727	J10-12	0740	012-1
K	F123	N11-7	F314	L06-6	I632	A55-6	P001	J21-8	K822	P61-5	0751	012-7
L	F123	N11-8	F347	K04-12	I633	A56-6	P010	J22-8	K823	P61-11	0760	016-1
M	F001	002-7	F700	J15-9	I634	A57-6	P020	J24-8	V485	083-11	0770	017-1
N	F114	M12-7	F345	K03-12	I635	A58-6	P020	J24-8	V485	083-8	0780	025-1
P	F114	M12-8	F315	L06-12	W821	036-7	P040	J29-8	V485	083-10	0790	031-1
R	F114	M12-6	F362	K11-5	W822	N37-7	P050	J31-8	V485	083-7	0810	032-1
S	H455	N63-1	F363	K11-11	W823	037-7	P060	J34-8	K049	K64-7	0800	033-1
T	F125	N12-7	F353	K07-10	W824	N38-7	P070	J36-8	V481	N76-7	I364	K72-1
U	F116	M14-10	F352	K07-6	W825	038-7	P080	J38-8	F710	J12-12		
V	F116	M14-9	F345	K03-11	W826	N39-7	P090	J41-8	F710	J12-11	W836	K12-12
W	F127	N09-10	F371	K13-12	K800	P48-9	P100	J43-8	N556	034-7	I330	J78-1
X	F107	N08-8	F340	K01-6	V480	L69-12	P110	J45-8	F727	J10-11	I332	J77-1
Y	F117	M15-6	H979	N16-1	V456	048-12	P120	J48-8	J905	J80-1		
Z	H975	026-1	I377	K26-10	K339	G02-11	P130	J50-8	I258	K66-2	I336	J75-1
a	H953	L22-1	I258	K66-5	W180	I34-1	P140	J52-8	F351	K06-10		
b	GRD		GRD		GRD		GRD		GRD		GRD	
	(4L1)		(4L2)		(7L3)		(4M1)		(4N1)		(8M3)	

PIN	N1 TERM	N1 JACK	N2 TERM	N2 JACK	N3 TERM	N3 JACK	O1 TERM	O1 JACK	O2 TERM	O2 JACK	O3 TERM	O3 JACK
A	P029	N78-12	L715	I77-3	I340	J73-1	M750	I06-1	L750	I80-3	I253	J02-9
B	N099	P35-1	L716	I77-7	H484	082-1	M751	I06-5	L751	I80-7	K783	040-12
C	N097	P34-1	L717	I77-11	I393	048-1	M752	I06-9	L752	I80-11	K783	040-11
D	V456	048-7	L718	I78-3	I834	L04-1	M753	I07-1	L753	I81-3	K783	040-10
E	K136	M56-2	L719	I78-7	I835	L04-7	M754	I07-5	L754	I81-7	I252	J02-2
F	F304	L03-12	L720	I78-11	J530	L83-2	M755	I07-9	L755	I81-11	I254	N83-2
H	F004	005-5	L721	I79-3	I836	K15-1	M756	I08-1	L756	I82-3	K782	040-5
J	H457	N75-1	L722	I79-7	J530	L83-4	M757	I08-5	L757	I82-7	I252	J02-6
K	J768	075-1	L723	I79-11	I837	K15-7	M758	I08-9	L758	I82-11	J068	H83-1
L	K077	P32-8	M712	I02-1	J530	L83-6	M759	I09-1	L759	I83-3	K782	040-4
M	K076	P32-2	M713	I02-5	J510	M78-5	M760	I09-5	L760	I83-7	K782	040-3
N	K079	P33-8	M714	I02-9	W821	036-6	M761	I09-9	L761	I83-11	K782	040-6
P	K078	P33-2	M715	I03-1	W822	N37-6	M762	I10-1	L762	I84-3	I258	K66-6
R	F390	J07-12	M716	I03-5	W823	037-6	M763	I10-5	L763	I84-7	K755	064-2
S	F391	K14-12	M717	I03-9	W824	N38-6	M764	I10-9	L764	I84-11	K783	040-7
T	K074	P31-5	M718	I04-1	W825	038-6	L682	N45-7	M548	I11-1	A979	L48-1
U	F215	M07-12	M719	I04-5	W826	N39-6	L683	N45-11	M724	I11-5	V457	N64-5
V	F214	M07-6	M720	I04-9	R907	M63-2	L684	N46-3	M765	I01-1	V456	048-10
W	F707	J11-5	M721	I05-1	W183	I51-11	L685	N46-7	L692	N47-11	I187	E77-12
X	F107	N08-7	M722	I05-5	W831	L09-6	L686	N46-11	L693	N48-3	J070	J47-1
Y	F112	M10-6	M723	I05-9	W832	L09-12	L687	N47-7	L694	081-7	K774	P37-4
Z	F681	K09-12	L698	081-3	W833	M09-6	L688	N47-3	L695	N48-11	V480	L69-7
a	L688	N47-1			W834	M09-12	L681	N45-3			W152	L60-11
b	GRD		GRD		GRD		GRD		GRD		GRD	
	(402)		(CONSOLE J20327)		(8N3)		(CONSOLE J20328)		(CONSOLE J20329)		(403)	

PIN	P1 TERM	P1 JACK
A	I253	J02-10
B	I253	J02-12
C	K508	D09-1
D	K509	D09-7
E	F353	K07-9
F	F331	L12-9
H	V599	K59-5
J	A996	H09-12
K	K232	L50-2
L	J150	K62-12
M	F700	J15-12
N	A996	H09-11
P	H975	026-2
R	H953	L22-2
S	F113	M11-6
T	N455	021-3
U	U390	N20-5
V	U400	N22-5
W	U410	N24-5
X	H966	L32-2
Y	W771	L28-8
Z	F332	L14-6
a	A986	J13-9
b	GRD	
	(3P1)	

NOTE:
CABLE DESTINATIONS ARE SHOWN BELOW THE TABLES ABOVE; e.g., (3G1) INDICATES THAT THE CABLE DESTINATION IS CHASSIS 10300, CONNECTOR G1.

REFERENCE DRAWINGS

COMPONENTS (UNLESS OTHERWISE INDICATED) TOLERANCE VALUE SIZE
RESISTORS
CAPACITORS

REV. AUTH. DATE ENG. DRW. CHK. APPROVED — REVISIONS
APPROVED · CHECKED · 4-5-63 DRAWN · TAW 3-25-63 DESIGNED ·

CONTROL DATA CORPORATION

PROJECT OR PRODUCT 1604-A

TITLE CABLE CONNECTOR PIN ASSIGNMENTS CHASSIS 10600

DRAWING NUMBER XDP 214617 G

PAGE 80.6

A2

PIN	
A	
B	T01-T04, pin 1
C	
D	
E	
F	
H	
J	T01-T04, pin 3
K	
L	
M	T01-T04, pin 2
N	
P	
R	

(FUSE PANEL)

B1

PIN	TERM	JACK
A	E700	B01-1
B	E702	B02-1
C	E710	B03-1
D	E712	B04-1
E	E714	B05-1
F	E720	B06-1
H	E722	B07-1
J	E724	B08-1
K	E730	C03-1
L	E732	C04-1
M	E734	C05-1
N	E740	C06-1
P	E742	C07-1
R	E744	C08-1
S	J207	B09-1
T	J217	B09-7
U	J227	B10-1
V	J237	A17-1
W	J247	B11-1
X	J347	A33-1
Y	W278	A38-1
Z	N790	A19-1
a	N791	A26-1
b	GRD	

(3G1)

B2

PIN	TERM	JACK
A	E750	B77-1
B	E752	B78-1
C	E760	B79-1
D	E762	B80-1
E	E764	B81-1
F	E770	B82-1
H	E772	B83-1
J	E774	B84-1
K	E780	C79-1
L	E782	C80-1
M	E784	C81-1
N	E790	C82-1
P	E792	C83-1
R	E794	C84-1
S	J257	B74-1
T	J267	B74-7
U	J277	B75-1
V	J287	A68-1
W	J297	B76-1
X	J367	A52-1
Y	W279	A51-1
Z	N794	A66-1
a	N795	A59-1
b	GRD	

(4G1)

C1

PIN	TERM	JACK
A	I636	A53-12
B	I637	A54-12
C	I638	A55-12
D	V755	B73-1
E	M450	M70-1
F	M550	M70-5
H	M650	M70-9
J	00	L80-4
K	CARD	L80-10
L	I024	N37-6
M	I025	N37-10
N	I026	N38-6
P	I027	N38-12
R	I028	N39-5
S	I029	N39-11
T	I024	N37-5
U	I025	N37-11
V	I026	N38-5
W	I027	N38-11
X	I028	N39-6
Y	I029	N39-12
Z		
a		
b	GRD	

(5E1)

C2

PIN	TERM	JACK
A	I639	A56-12
B	I640	A57-12
C	I641	A58-12
D	M148	L81-3
E	L149	L82-1
F	J501	P62-1
H	L167	L84-1
J	J970	N74-6
K	W160	J39-2
L	J971	N74-12
M		
N	J972	N75-6
P	W163	J49-11
R	J973	N75-12
S	J502	P63-1
T	J503	P64-1
U	J698	P61-1
V	J248	L81-7
W	L249	L82-5
X	L267	L84-5
Y	M348	L81-11
Z	L349	L82-9
a	L367	L84-9
b	GRD	

(6F1)

D1

PIN	TERM	JACK
A	I636	A53-11
B	I637	A54-11
C	I638	A55-11
D	I639	A56-11
E	I640	A57-11
F	I641	A58-11
H	X364	D01-1
J	X374	D01-7
K	X389	D02-1
L	X394	D02-7
M	X404	D03-1
N	X414	D03-7
P		
R	H290	K83-1
S	00	L80-2
T	CARD	L80-8
U	W160	J39-1
V		
W	K904	L61-4
X	J941	N66-12
Y		
Z	K142	074-1
a	K142	074-6
b	GRD	

(2E1)

D2

PIN	TERM	JACK
A	I001	N12-11
B	I002	N13-5
C	I003	N13-11
D	I004	N14-5
E	I005	N14-11
F	W838	M71-6
H	W838	M71-5
J	W838	M71-4
K	W838	M71-3
L	W838	M71-2
M	W848	M71-12
N	M000	P33-11
P	M001	P34-11
R	M002	P35-11
S	M003	P36-11
T	M004	P37-11
U	M005	P38-11
V	M006	P39-11
W	M007	P40-11
X	M008	P41-11
Y	M009	P42-11
Z	M010	P43-11
a	M011	P44-11
b	GRD	

(1F1)

E1

PIN	TERM	JACK
A	I700	M01-11
B	I701	M02-11
C	I702	M03-11
D	I703	M04-11
E	I704	M05-11
F	I705	M62-11
H	I706	M63-11
J	I707	M64-11
K	I708	M65-11
L	I709	M79-11
M	I710	M80-11
N	I711	M81-11
P	I712	M82-11
R	I713	M83-11
S	I714	M84-11
T	I000	N12-6
U	I001	N12-12
V	I002	N13-6
W	I003	N13-12
X	I004	N14-6
Y	I005	N14-12
Z	I000	N12-5
a		
b	GRD	

(1F2)

E2

PIN	TERM	JACK
A	I006	N19-6
B	I007	N19-12
C	I008	N20-6
D	I009	N20-12
E	I010	N21-6
F	I011	N21-12
H	I006	N19-5
J	I007	N19-11
K	I008	N20-5
L	I009	N20-11
M	I010	N21-5
N	I011	N21-11
P	W848	M71-11
R	W848	M71-10
S	W848	M71-9
T	W848	M71-8
U	W858	M72-6
V	W858	M72-5
W	M043	P44-3
X	M044	P45-3
Y	M045	P46-3
Z	M046	P47-3
a	M047	P48-3
b	GRD	

(2F2)

F1

PIN	TERM	JACK
A	W299	A51-7
B	J369	A52-7
C	M048	L34-7
D	L049	L79-1
E	K143	074-12
F	J500	P49-1
H	K083	K80-12
J	K085	K81-12
K	K086	J84-6
L	K019	P31-2
M	I018	N31-6
N	I019	N31-12
P	I020	N32-6
R	I021	N32-12
S	I022	N33-6
T	I023	N33-12
U	I018	N31-5
V	I019	N31-11
W	I020	N32-5
X	I021	N32-11
Y	I022	N33-5
Z	I023	N33-11
a	I023	N33-11
b	GRD	

(4H2)

F2

PIN	TERM	JACK
A	J349	A33-7
B	W298	A38-7
C	I012	N25-6
D	I013	N25-12
E	I014	N26-6
F	I015	N26-12
H	I016	N27-6
J	I017	N27-12
K	I012	N25-5
L	I013	N25-11
M	I014	N26-5
N	I015	N26-11
P	I016	N27-5
R	I017	N27-11
S	W858	M72-4
T	W858	M72-3
U	W858	M72-2
V	K003	P14-6
W	K916	K63-3
X	M165	J80-7
Y	K917	K63-10
Z		
a		
b	GRD	

(3B1)

G1

PIN	TERM	JACK
A	I815	K59-7
B	I818	K57-7
C	I821	K56-7
D	I824	K54-7
E	I827	K53-7
F	I830	K51-7
H	I815	K59-8
J	I818	K57-8
K	I821	K56-8
L	I824	K54-8
M	I827	K53-8
N	I830	K51-8
P	I815	K59-9
R	I818	K57-9
S	I821	K56-9
T	I824	K54-9
U	I827	K53-9
V	I830	K51-9
W	I815	K59-10
X	I818	K57-10
Y	I821	K56-10
Z	I824	K54-10
a	I827	K53-10
b	GRD	

(8G1)

G2

PIN	TERM	JACK
A	I830	K51-10
B	I816	K59-1
C	I819	K57-1
D	I822	K56-1
E	I825	K54-1
F	I828	K53-1
H	I831	K51-1
J	I816	K59-2
K	I819	K57-2
L	I822	K56-2
M	I825	K54-2
N	I828	K53-2
P	I831	K51-2
R	I816	K59-3
S	I819	K57-3
T	I822	K56-3
U	I825	K54-3
V	I828	K53-3
W	I823	K51-3
X	I816	K59-4
Y	I819	K57-4
Z	I822	K56-4
a	I825	K54-4
b	GRD	

(8G2)

H1

PIN	TERM	JACK
A	I828	K53-4
B	I831	K51-4
C	K997	070-8
D	I636	A53-9
E	I637	A54-9
F	I638	A55-9
H	R200	059-5
J	00	L80-5
K	CARD	L80-11
L	Z362	A60-5
M	Z372	A61-5
N	Z382	A62-5
P	Z392	A63-5
R	Z402	A64-5
S	Z412	A65-5
T	L179	K15-11
U	M178	J83-1
V	M168	J82-5
W	K018	009-9
X	K914	L76-4
Y	J968	P61-12
Z	K018	009-8
a	K018	009-7
b	GRD	

(8H1)

H2

PIN	TERM	JACK
A	M169	J79-5
B	M166	J79-1
C	M164	J80-9
D	M165	J80-5
E	M153	J78-1
F	M152	J79-9
H	M155	K14-9
J	M154	K14-5
K	M156	K14-1
L	M170	L32-1
M	M171	L32-5
N	M172	L32-9
P	M173	L33-1
R	M174	L33-5
S	M175	L33-9
T	M176	L34-1
U	L199	L79-7
V	M157	J82-9
W	M180	L34-9
X	ALARM	A72-4
Y		
Z		
a		
b	GRD	

(CONSOLE J20301)

H3

PIN	TERM	JACK
A	W988	P17-1
B	W989	P17-7
C	W990	N72-1
D	W991	N72-7
E	W992	N76-1
F	W993	N76-7
H	M070	K04-12
J	M650	M70-12
K	M650	M70-8
L	M450	M70-4
M	M070	K04-11
N	M450	M70-3
P	M650	M70-7
R	M650	M70-11
S	I706	M63-10
T	I707	M64-10
U	I708	M65-10
V	I709	M79-10
W	I710	M80-10
X	I711	M81-10
Y	I712	M82-10
Z	I713	M83-10
a	I714	M84-10
b	GRD	

(6I3)

I1

PIN	TERM	JACK
A	L170	M73-3
B	L171	M73-7
C	L172	M73-11
D	L173	M74-3
E	L174	M74-7
F	L175	M74-11
H	L176	M75-3
J	L177	M75-7
K	L180	M75-11
L	J925	J69-1
M	V778	K78-2
N	K089	J84-14
P	R729	I84-14
R	R729	I84-15
S	R729	I84-13
T		
U		
V		
W		
X	L189	L78-7
Y	L188	L78-3
Z	M995	N81-5
a	M996	N81-9
b	GRD	

(CONSOLE J20302)

I2

PIN	TERM	JACK
A	L190	L45-11
B	L191	L45-7
C	L192	L45-3
D	L193	L44-11
E	L194	L44-7
F	L195	L44-3
H	M272	J78-9
J	L176	L43-11
K	M273	J83-5
L	M270	J78-5
M	M260	J38-1
N	M261	J38-5
P	M262	J38-9
R	M263	J37-1
S	M264	J37-5
T	M265	J37-9
U	M267	J36-1
V	M268	J36-5
W	M266	J35-5
X	M271	J35-1
Y	M269	J36-9
Z	M275	J35-9
a	M274	J83-9
b	GRD	

(CONSOLE J20330)

I3

PIN	TERM	JACK
A	M012	P45-11
B	M013	P46-11
C	M014	P47-11
D	M015	P48-11
E	M016	P33-7
F	M017	P34-7
H	M018	P35-7
J	M019	P36-7
K	M020	P37-7
L	M021	P38-7
M	M022	P39-7
N	M023	P40-7
P		
R		
S		
T		
U		
V		
W		
X		
Y		
Z		
a		
b	GRD	

(1L2)

J1

PIN	TERM	JACK
A	M186	N80-1
B	M187	N80-5
C	M188	N80-9
D	M189	N81-1
E	M190	N82-1
F	M191	N82-5
H	M192	N82-9
J	M193	N83-1
K	M194	N83-5
L	M195	N83-9
M	M196	N84-1
N	M197	N84-5
P	M199	N84-9
R	W162	K50-3
S	W162	K50-4
T	Y757	I73-1
U	J970	N74-1
V	J971	N74-7
W	J972	N75-1
X	J973	N75-7
Y		
Z		
a	J927	J70-8
b	GRD	

(8J1)

J2

PIN	TERM	JACK
A	M147	058-1
B	M146	057-1
C	M145	056-1
D	M144	055-1
E	M143	054-1
F	M142	053-1
H	M141	052-1
J	M140	051-1
K	M139	050-1
L	M138	049-1
M	M137	048-1
N	M136	047-1
P	M135	046-1
R	M134	045-1
S	M133	044-1
T	M132	043-1
U	M131	042-1
V	M130	041-1
W	M129	040-1
X	M128	039-1
Y	M127	038-1
Z	M126	037-1
a	M125	036-1
b	GRD	

(CHAN. 1 CABLE A)

J3

PIN	TERM	JACK
A	R210	075-6
B	R211	075-12
C	R212	076-6
D	R213	076-12
E	R214	077-6
F	R215	077-12
H	R216	078-6
J	R217	078-12
K	R218	079-6
L	R219	079-12
M	R220	080-6
N	R221	080-12
P	R222	081-6
R	R223	081-12
S	R224	082-6
T	R225	082-12
U	R226	083-6
V	R227	083-12
W	R228	084-6
X	R229	084-12
Y	K013	P19-3
Z	R202	065-5
a	R204	066-5
b	GRD	

(8J3)

K1

PIN	TERM	JACK
A	M124	035-1
B	M123	034-1
C	M122	033-1
D	M121	032-1
E	M120	031-1
F	M119	030-1
H	M118	029-1
J	M117	028-1
K	M116	027-1
L	M115	026-1
M	M114	025-1
N	M113	024-1
P	M112	023-1
R	M111	022-1
S	M110	021-1
T	M109	020-1
U	M108	019-1
V	M107	017-1
W	M106	016-1
X	M105	015-1
Y	M104	014-1
Z	M103	013-1
a	M102	012-1
b	GRD	

(CHAN. 1 CABLE B)

K2

PIN	TERM	JACK
A	M101	011-1
B	M100	010-1
C	M148	L81-1
D	L149	L82-3
E	L167	L84-3
F	L166	L83-3
H	L077	M68-3
J	ALARM	A72-1
K		
L		
M		
N		
P		
R		
S		
T		
U		
V		
W		
X		
Y		
Z		
a	W162	K50-2
b	GRD	

(CHAN. 1 CABLE C)

K3

PIN	TERM	JACK
A	N658	P30-1
B	N659	P30-7
C	H639	N84-1
D	K012	P20-3
E	H638	P71-1
F	K002	P13-1
H		
J	J841	P24-1
K	K012	P20-2
L	K013	P19-2
M	K018	009-2
N	K013	P19-4
P	H638	P71-2
R	H638	P71-3
S	W163	J49-9
T	H639	H84-2
U	H638	P71-4
V	K003	P14-7
W	K002	P13-10
X	K002	P13-11
Y	H639	H84-3
Z		
a	H639	H84-4
b	GRD	

(4P1)

L1

PIN	TERM	JACK
A	M247	058-5
B	M246	057-5
C	M245	056-5
D	M244	055-5
E	M243	054-5
F	M242	053-5
H	M241	052-5
J	M240	051-5
K	M239	050-5
L	M238	049-5
M	M237	048-5
N	M236	047-5
P	M235	046-5
R	M234	045-5
S	M233	044-5
T	M232	043-5
U	M231	042-5
V	M230	041-5
W	M229	040-5
X	M228	039-5
Y	M227	038-5
Z	M226	037-5
a	M225	036-5
b	GRD	

(CHAN. 3 CABLE A)

L2

PIN	TERM	JACK
A	M224	035-5
B	M223	034-5
C	M222	033-5
D	M221	032-5
E	M220	031-5
F	M219	030-5
H	M218	029-5
J	M217	028-5
K	M216	027-5
L	M215	026-5
M	M214	025-5
N	M213	024-5
P	M212	023-5
R	M211	022-5
S	M210	021-5
T	M209	020-5
U	M208	019-5
V	M207	017-5
W	M206	016-5
X	M205	015-5
Y	M204	014-5
Z	M203	013-5
a	M202	012-5
b	GRD	

(CHAN. 3 CABLE B)

L3

PIN	TERM	JACK
A	I030	N43-5
B	I031	N43-11
C	I032	N44-5
D	I033	N44-11
E	I034	N45-5
F	I035	N45-11
H	I030	N43-6
J	I031	N43-12
K	I032	N44-6
L	I033	N44-12
M	I034	N45-6
N	I035	N45-12
P	W841	N08-1
R	W842	N09-1
S	W843	N10-1
T	W844	N23-1
U	W845	N29-1
V	W846	N35-1
W	J845	M72-7
X	K012	P20-5
Y	K003	P14-2
Z	J967	P60-6
a	W160	J39-3
b	GRD	

(6L3)

M1

PIN	TERM	JACK
A	M201	011-5
B	M200	010-5
C	J248	L81-5
D	L249	L82-7
E	L267	L84-7
F	L266	L83-7
H	M550	M70-5
J	ALARM	A72-2
K		
L		
M		
N		
P		
R		
S		
T		
U		
V		
W		
X		
Y		
Z		
a	W162	K50-3
b	GRD	

(CHAN. 3 CABLE C)

M2

PIN	TERM	JACK
A	M347	058-9
B	M346	057-9
C	M345	056-9
D	M344	055-9
E	M343	054-9
F	M342	053-9
H	M341	052-9
J	M340	051-9
K	M339	050-9
L	M338	049-9
M	M337	048-9
N	M336	047-9
P	M335	046-9
R	M334	045-9
S	M333	044-9
T	M332	043-9
U	M331	042-9
V	M330	041-9
W	M329	040-9
X	M328	039-9
Y	M327	038-9
Z	M326	037-9
a	M325	036-9
b	GRD	

(CHAN.5 CABLE A)

M3

PIN	TERM	JACK
A	I042	N55-5
B	I043	N55-11
C	I044	N56-5
D	I045	N56-11
E	I046	N57-5
F	I047	N57-11
H	I042	N55-6
J	I043	N55-12
K	I044	N56-6
L	I045	N56-12
M	I046	N57-6
N	I047	N57-12
P	R200	059-6
R	R201	059-12
S	R202	065-6
T	R203	065-12
U	R204	066-6
V	R205	066-12
W	R206	071-6
X	R207	071-12
Y	R208	P72-6
Z	R209	P72-12
a	W162	K50-2
b	GRD	

(8F1)

N1

PIN	TERM	JACK
A	M324	035-9
B	M323	034-9
C	M322	033-9
D	M321	032-9
E	M320	031-9
F	M319	030-9
H	M318	029-9
J	M317	028-9
K	M316	027-9
L	M315	026-9
M	M314	025-9
N	M313	024-9
P	M312	023-9
R	M311	022-9
S	M310	021-9
T	M309	020-9
U	M308	019-9
V	M307	017-9
W	M306	016-9
X	M305	015-9
Y	M304	014-9
Z	M303	013-9
a	M302	012-9
b	GRD	

(CHAN. 5 CABLE B)

N2

PIN	TERM	JACK
A	M301	011-9
B	M300	010-9
C	M348	L81-9
D	L349	L82-11
E	L367	L84-11
F	L366	L83-11
H	M650	M70-9
J	ALARM	A72-3
K		
L		
M		
N		
P		
R		
S		
T		
U		
V		
W		
X		
Y		
Z		
a	W162	K50-4
b	GRD	

(CHAN. 5 CABLE C)

N3

PIN	TERM	JACK
A	H639	H84-9
B	H639	H84-8
C	H639	H84-7
D	H638	P71-9
E	H638	P71-8
F	H938	P71-7
H		
J	W163	J49-5
K		
L	R206	071-5
M	R208	P72-5
N	R210	075-5
P	R212	076-5
R	R214	077-5
S	W163	J49-7
T	W163	J49-6
U	R216	078-5
V	R218	079-5
W	R220	080-5
X	R222	081-5
Y	R224	082-5
Z	R226	083-5
a	R228	084-5
b	GRD	

(8O3)

O1

PIN	TERM	JACK
A	M047	P48-1
B	M046	P47-1
C	M045	P46-1
D	M044	P45-1
E	M043	P44-1
F	M042	P43-1
H	M041	P42-1
J	M040	P41-1
K	M039	P40-1
L	M038	P39-1
M	M037	P38-1
N	M036	P37-1
P	M035	P36-1
R	M034	P35-1
S	M033	P34-1
T	M032	P33-1
U	M031	P48-5
V	M030	P47-5
W	M029	P46-5
X	M028	P45-5
Y	M027	P44-5
Z	M026	P43-5
a	M025	P42-5
b	GRD	

(CHAN.7 CABLE A)

O2

PIN	TERM	JACK
A	M024	P41-5
B	M023	P40-5
C	M022	P39-5
D	M021	P38-5
E	M020	P37-5
F	M019	P36-5
H	M018	P35-5
J	M017	P34-5
K	M016	P33-5
L	M015	P48-9
M	M014	P47-9
N	M013	P46-9
P	M012	P45-9
R	M011	P44-9
S	M010	P43-9
T	M009	P42-9
U	M008	P41-9
V	M007	P40-9
W	M006	P39-9
X	M005	P38-9
Y	M004	P37-9
Z	M003	P36-9
a	M002	P35-9
b	GRD	

(CHAN. 7 CABLE B)

O3

PIN	TERM	JACK
A	M024	P41-7
B	M025	P42-7
C	M026	P43-7
D	M027	P44-7
E	M028	P45-7
F	M029	P46-7
H	M030	P47-7
J	M031	P48-7
K	M032	P33-3
L	M033	P34-3
M	M034	P35-3
N	M035	P36-3
P	M036	P37-3
R	M037	P38-3
S	M038	P39-3
T	M039	P40-3
U	M040	P41-3
V	M041	P42-3
W	M042	P43-3
X		
Y		
Z		
a		
b	GRD	

(2L1)

P1

PIN	TERM	JACK
A	M001	P34-9
B	M000	P33-9
C	M048	L34-5
D	L049	L79-3
E		
F	L066	L79-11
H	M070	K04-9
J		
K		
L		
M		
N		
P		
R		
S		
T		
U		
V		
W		
X		
Y		
Z		
a		
b	GRD	

(CHAN. 7 CABLE C)

NOTE:
CABLE DESTINATIONS ARE SHOWN BELOW THE TABLES ABOVE; e.g., (3G1) INDICATES THAT THE CABLE DESTINATION IS CHASSIS 10300, CONNECTOR G1.

REV.	AUTH.	DATE	REQ.	DRW.	CHK.	APPROVED

REVISIONS

DESIGNED - | DRAWN - T.A.V. 12-4-62 | CHECKED - [signature] 4-5-63 | APPROVED -

REFERENCE DRAWINGS

COMPONENTS (UNLESS OTHERWISE INDICATED)

	TOLERANCE	VALUE	SIZE
RESISTORS			
CAPACITORS			

TITLE CABLE CONNECTOR PIN ASSIGNMENTS CHASSIS 10700

CONTROL DATA CORPORATION

PROJECT OR PRODUCT 1604-A

DRAWING NUMBER XDP 214618 J

PAGE 80.7

PIN	A2	B1 TERM	B1 JACK	B2 TERM	B2 JACK	C1 TERM	C1 JACK	C2 TERM	C2 JACK
A		E800	B01-1	E850	B77-1	I542	A27-12	R009	P71-6
B	T01-T04, pin 1	E802	B02-1	E852	B78-1	I543	A28-12	J402	I01-1
C		E810	B03-1	E860	B79-1	I544	A29-12	J403	J01-1
D		E812	B04-1	E862	B80-1	I545	A30-12	L048	P15-5
E		E814	B05-1	E864	B81-1	I546	A31-12	M049	P14-3
F		E820	B06-1	E870	B82-1	I547	A32-12		
H		E822	B07-1	E872	B83-1	R905	P16-6	J440	M03-1
J	T01-T04, pin 3	E824	B08-1	E874	B84-1	J450	N02-1	J441	M44-1
K		E830	C03-1	E880	C79-1	J450	N02-2	J490	M03-7
L		E832	C04-1	E882	C80-1	J451	N01-2	J491	M44-7
M	T01-T04, pin 2	E834	C05-1	E884	C81-1	W888	P28-12	K150	B34-2
N		E840	C06-1	E890	C82-1	W888	P28-11	K151	B51-2
P		E842	C07-1	E892	C83-1	Y855	B73-1	I180	054-7
R		E844	C08-1	E894	C84-1	M149	P19-3		
S		J208	B09-1	J258	B74-1	J404	J02-1	00 CARD	D04-5
T		J218	B09-7	J268	B74-7	J406	K01-1		D04-11
U		J228	B10-1	J278	B75-1	J406	K02-1		
V		J238	A17-1	J288	A68-1	L148	P20-9		
W		J248	B11-1	J298	B76-1	L168	P20-5		
X		J348	A33-1	J368	A52-1	J451	N01-1		
Y		W288	A38-1	W289	A51-1	0620	J31-5		
Z		N890	A19-1	N894	A66-1	J916	N14-12	H446	062-11
a		N891	A26-1	N895	A59-1	0620	J31-4		
b		GRD		GRD		GRD		GRD	
	(FUSE PANEL)	(3G2)		(4G2)		(6G1)		(401)	

PIN	D1 TERM	D1 JACK	D2 TERM	D2 JACK	E1 TERM	E1 JACK	E2 TERM	E2 JACK	F1 TERM	F1 JACK
A	I542	A27-11	I050	072-1	I112	J30-1	I774	M32-9	I542	A27-6
B	I543	A28-11	I051	072-7	I113	J30-7	I775	M33-10	I543	A28-6
C	I544	A29-11	I052	073-1	I114	L30-1	I776	M34-10	I544	A29-6
D	I545	A30-11	I053	073-7	I115	L30-7	I777	M41-10	I545	A30-6
E	I546	A31-11	I054	074-1	I116	N30-1	I778	M42-10	I546	A31-6
F	I547	A32-11	I055	074-7	I117	N30-7	I779	M43-10	I547	A32-6
H	X424	D01-1	I056	080-1	R250	P31-6	I780	M51-10	I642	A53-6
J	X434	D01-7	I057	080-7	R252	P32-6	I781	M52-10	I643	A54-6
K	X444	D02-1	I058	081-1	R254	P34-6	I782	M53-10	I644	A55-6
L	X454	D02-7	I059	081-7	R256	P35-6	I783	M61-10	I645	A56-6
M	X464	D03-1	I060	082-1	R258	P36-6	I784	M62-10	I646	A57-6
N	X474	D03-7	I061	082-7	R260	P41-6	I785	M63-10	I647	A58-6
P			I062	083-1	R262	P42-6	I786	M72-10	R900	001-1
R	00 CARD	D04-3	I063	083-7	R264	P43-6	I787	M73-10	R900	001-2
S		D04-9	I064	084-1	R266	P45-6	I788	M74-10	R900	001-3
T			I100	J10-1	R268	P46-6	I106	J21-1	R900	001-4
U			I101	J10-7	R270	P47-6	I107	J21-7	R900	001-5
V			I102	L10-1	R272	P51-6	I108	L21-1	R900	001-6
W			I103	L10-7	R274	P52-6	I109	L21-7	R901	002-1
X			I104	N10-1	R276	P53-6	I110	N21-1	R901	002-2
Y			I105	N10-7			I111	N21-7	R901	002-3
Z			I048	P72-1			N737	E07-4	R901	002-4
a			0238	036-1			0478	076-1	M054	D81-1
b	GRD		GRD		GRD		GRD		GRD	
	(2F1)		(1G1)		(3L3)		(2G1)		(7M3)	

PIN	F2 TERM	F2 JACK	G1 TERM	G1 JACK	G2 TERM	G2 JACK	G3 TERM	G3 JACK	H1 TERM	H1 JACK
A	I118	J40-1	0003	J08-11	0233	039-11	0248	J46-1	0463	N79-11
B	I119	J40-7	0013	K08-11	0243	J49-11	0258	K46-1	0473	079-11
C	I120	L40-1	0023	L08-11	0253	K49-11	0268	L46-1	J514	K23-6
D	I121	L40-7	0033	M08-11	0263	L49-11	0278	M46-1	W888	P28-10
E	I122	N40-1	0043	N08-11	P273	M49-11	0288	N46-1	W888	P28-9
F	I123	N40-7	0053	008-11	0283	N49-11	0298	046-1	W888	P28-8
H	R250	P31-5	0063	J19-11	0293	049-11	0308	J56-1	I100	J10-2
J	R252	P32-5	0073	K19-11	0303	J59-11	0318	K56-1	00 CARD	D04-4
K	R254	P34-5	0083	L19-11	0313	K59-11	0328	L56-1		D04-10
L	R256	P35-5	0093	M19-11	0323	L59-11	0338	M56-1	I136	J71-1
M	R258	P36-5	0103	N19-11	0333	M59-11	0348	N56-1	I137	J71-7
N	R260	P41-5	0113	019-11	0343	N59-11	0358	056-1	I138	L71-1
P	R262	P42-5	0123	J28-11	0353	059-11	0368	J66-1	I139	L71-7
R	R264	P43-5	0133	K28-11	0363	J70-11	0378	K66-1	I140	N71-1
S	R266	P45-5	0143	L28-11	0373	K70-11	0388	L66-1	I141	N71-7
T	R268	P46-5	0153	M29-11	0383	L70-11	0398	M66-1	M149	P19-1
U	R270	P47-5	0163	N29-11	0393	M70-11	0408	N66-1	L148	P20-11
V	R272	P51-5	0173	029-11	0403	N70-11	0418	066-1	L168	P20-7
W	R274	P52-5	0183	J39-11	0413	070-11	0428	J76-1	W868	P17-7
X	R276	P53-5	0193	K39-11	0423	J79-11	0438	K76-1	0063	J19-10
Y	N656	N04-1	0203	L39-11	0433	K79-11	0448	L76-1	J914	N13-5
Z			0213	M39-11	0443	L79-11	0458	M76-1	W878	P28-1
a			0223	N39-11	0453	M79-11	0468	N76-1	W888	P28-7
b	GRD		GRD		GRD		GRD		GRD	
	(4K3)		(7G1)		(7G2)		(2G2)		(7H1)	

PIN	H2 TERM	H2 JACK	H3 TERM	H3 JACK	I1 TERM	I1 JACK	I2 TERM	I2 JACK	I3 TERM	I3 JACK
A	K014	N25-4	0008	J05-1	I124	J50-1	L268	P23-5	M054	D81-3
B	K015	N24-4	0018	K05-1	I125	J50-7	L368	P26-5	M055	D81-7
C	R059	P72-10	0028	L05-1	I126	L50-1	L248	P23-9	M056	D81-11
D	K014	N25-5	0038	M05-1	I127	L50-7	L348	P26-9	M150	P19-5
E	I778	M42-10	0048	N05-1	I128	N50-1	M249	P22-3	M250	P22-5
F			0058	005-1	I129	N50-7	M348	P25-3	M350	P25-5
H			0068	J15-1	W868	P17-12			I051	072-9
J			0078	K15-1	W868	P17-11	J514	K23-1	I052	073-3
K			0088	L15-1	W868	P17-10	0031	M09-12	I053	073-8
L			0098	M15-1	W868	P17-9			I054	074-2
M	K151	B51-3	0108	N15-1	W868	P17-8	0001	J09-12	I055	074-8
N			0118	015-1	W878	P28-6	I130	J60-1	N737	E07-4
P	N657	N04-7	0128	J25-1	I778	M42-9	W998	N65-1	J514	K23-2
R	K014	N25-3	0138	K25-1	I779	M43-9	I131	J60-7		
S	I750	030-5	0148	L25-1	I780	M51-9	I132	L60-1	I368	P64-11
T	I774	M32-10	0158	M26-1	I781	M52-9	I133	L60-7		
U	H445	060-1	0168	N26-1	I782	M53-9	I134	N60-1		
V	K005	P56-7	0178	026-1	I783	M61-9	I135	N60-7		
W	J843	N03-1	0188	J36-1	I784	M62-9	W878	P28-5		
X	K014	N25-2	0198	K36-1	I785	M63-9	W878	P28-4		
Y	K015	N24-2	0208	L36-1	I786	M72-9	0030	M09-5		
Z	I774	M32-7	0218	M36-1	I787	M73-9	W878	P28-3		
a			0228	N36-1	I788	M74-9	W878	P28-2		
b	GRD		GRD		GRD		GRD		GRD	
	(4L3)		(1J1)		(5D2)		(6C1)		(6H3)	

PIN	J1 TERM	J1 JACK	J2 TERM	J2 JACK	J3 TERM	J3 JACK	K1 TERM	K1 JACK	K2 TERM	K2 JACK
A	L163	P21-3	L100	K13-3	R901	002-5	L123	N44-11	L146	N84-7
B	L165	P21-7	L101	K13-7	R901	002-6	L124	K53-3	L147	N84-11
C	L162	P21-11	L102	K13-11	R902	003-1	L125	K53-7	L148	P20-11
D	L164	P20-3	L103	M13-3	R902	003-2	L126	K53-11	M149	P19-1
E	L153	N12-3	L104	M13-7	R902	003-3	L127	N54-3	M150	P19-5
F	L154	N12-7	L105	M13-11	R902	003-4	L128	N54-7	L163	P21-3
H	L155	N12-11	L106	M24-3	R902	003-5	L129	N54-11	L165	P21-7
J	L156	J23-3	L107	M24-7	R902	003-6	L130	K63-3	L162	P21-11
K	L157	J23-7	L108	M24-11	R903	013-1	L131	K63-7	L164	P20-3
L	L158	J23-11	L109	024-3	R903	013-2	L132	K63-11	M151	P19-9
M	L159	L23-3	L110	024-7	R903	013-3	L133	N64-3	L168	P20-7
N	L160	L23-7	L111	024-11	R903	013-4	L134	N64-7	L150	J12-3
P	L161	L23-11	L112	K33-3	R903	013-5	L135	N64-11	L151	J12-7
R	M055	D81-5	L113	K33-7	R903	013-6	L136	K74-3	L152	J12-11
S	M056	D81-9	L114	K33-11	R904	P13-1	L137	K74-7	L153	N12-3
T	Y857	I73-1	L115	N34-3	R904	P13-2	L138	K74-11	L154	N12-7
U	0040	N09-5	L116	N34-7	R904	P13-3	L139	N75-3	L155	N12-11
V	0041	N09-12	L117	N34-11	R904	P13-4	L140	N75-7	L156	J23-3
W	0040	N09-4	L118	K43-3	R904	P13-5	L141	N75-11	L157	J23-7
X	0440	010-6	L119	K43-7	R904	P13-6	L142	K83-3	L158	J23-11
Y	0072	K19-6	L120	K43-11	V447	061-6	L143	K83-7	L159	L23-3
Z			L121	N44-3	I101	J10-8	L144	K83-11	L160	L23-7
a			L122	N44-7	I102	L10-2	L145	N84-3	L161	L23-11
b	GRD		GRD		GRD		GRD		GRD	
	(7J1)		(CHAN. 2 CABLE D)		(7J3)		(CHAN. 2 CABLE E)		(CHAN. 2 CABLE F)	

PIN	K3 TERM	K3 JACK	L1 TERM	L1 JACK	L2 TERM	L2 JACK	L3 TERM	L3 JACK	M1 TERM	M1 JACK
A	I368	P64-12	L200	K12-3	L223	N43-11	0070	K20-4	L246	N83-7
B	0100	N20-6	L201	K12-7	L224	K52-3	I056	080-4	L247	N83-11
C	0090	M20-5	L202	K12-11	L225	K52-7	I058	081-4	L248	P23-11
D	I061	082-11	L203	M12-3	L226	K52-11	0070	K20-3	M249	P22-1
E	0100	N20-4	L204	M12-7	L227	N53-3	0060	J20-4	M250	P22-5
F	0090	M20-4	L205	M12-11	L228	N53-7	0080	L20-5	L263	P24-3
H	I050	072-5	L206	M23-3	L229	N53-11	0080	L20-4	L265	P24-7
J	I061	082-10	L207	M23-7	L230	K62-3	0060	J20-3	L262	P24-11
K	0100	N20-3	L208	M23-11	L231	K62-7	0080	L20-3	L264	P23-3
L	0090	M20-3	L209	023-3	L232	K62-11	0080	L20-2	M251	P22-9
M	0000	J09-3	L210	023-7	L233	N63-3	0070	K20-2	L268	P23-7
N	I061	082-9	L211	023-11	L234	N63-7	0060	J20-2	L250	J11-3
P	0100	N20-2	L212	K32-3	L235	N63-11	I051	072-11	L251	J11-7
R	0090	M20-2	L213	K32-7	L236	K73-3	I052	073-5	L252	J11-11
S	0000	J09-2	L214	K32-11	L237	K73-7	I053	073-11	L253	N11-3
T	0110	020-6	L215	N33-3	L238	K73-11	I054	074-5	L254	N11-7
U	I060	082-5	L216	N33-7	L239	N74-3	I055	074-11	L255	N11-11
V	I059	081-11	L217	N33-11	L240	N74-7	I056	080-3	L256	J22-3
W	I057	080-11	L218	K42-3	L241	N74-11	I057	080-9	L257	J22-7
X	I056	080-5	L219	K42-7	L242	K82-3	I058	081-3	L258	J22-11
Y	I057	080-10	L220	N42-11	L243	K82-7	I060	082-4	L259	L22-3
Z	0060	J20-5	L221	N43-3	L244	K82-11	I059	081-10	L260	L22-7
a	I058	081-5	L222	N43-7	L245	N83-3	0110	020-4	L261	L22-11
b	GRD		GRD		GRD		GRD		GRD	
	(6J3)		(CHAN. 4 CABLE D)		(CHAN. 4 CABLE E)		(6K3)		(CHAN. 4 CABLE F)	

PIN	M2 TERM	M2 JACK	M3 TERM	M3 JACK	N1 TERM	N1 JACK	N2 TERM	N2 JACK	N3 TERM	N3 JACK
A	L300	K11-3	I060	082-3	L323	N42-11	L346	N82-7	M150	P19-8
B	L301	K11-7	I059	081-9	L324	K51-3	L347	N82-11	V447	061-8
C	L302	K11-11	0110	020-3	L325	K51-7	L348	P26-11	M050	P14-7
D	L303	M11-3	I060	082-2	L326	K51-11	M349	P25-1	I774	M32-8
E	L304	M11-7	0030	M09-4	L327	N52-3	M350	P25-5	I775	M33-9
F	L305	M11-11	I053	073-10	L328	N52-7	L363	P27-3	M150	P19-7
H	L306	M22-3	I050	072-4	L329	N52-11	L365	P27-7	I776	M34-9
J	L307	M22-7	I054	074-4	L330	K61-3	L362	P27-11	M250	P22-7
K	L308	M22-11	I055	074-10	L331	K61-7	L364	P26-3	I777	M41-9
L	L309	022-3	I056	080-2	L332	K61-11	M351	P25-9	M350	P25-7
M	L310	022-7	I057	080-8	L333	N62-3	L368	P26-7	I368	P64-6
N	L311	022-11	I058	081-2	L334	N62-7	L350	L12-3	W851	L81-1
P	L312	K31-3	I059	081-9	L335	N62-11	L351	L12-7	W852	L82-1
R	L313	K31-7	I061	082-9	L336	K72-3	L352	L12-11	W853	L83-1
S	L314	K31-11	I048	P72-6	L337	K72-7	L353	012-3	W854	M81-1
T	L315	N32-3	I050	072-3	L338	K72-11	L354	012-7	W855	M82-1
U	L316	N32-7			L339	N73-3	L355	012-11	W856	M83-1
V	L317	N32-11	W999	N65-7	L340	N73-7	L356	K22-3	R906	P16-12
W	L318	K41-3	M050	P14-8	L341	N73-11	L357	K22-7	K543	M84-8
X	L319	K41-7	M350	P25-8	L342	K81-3	L358	K22-11	W994	N45-1
Y	L320	K41-11			L343	K81-7	L359	N23-3	W995	N45-7
Z	L321	N42-3	M250	P22-8	L344	K81-11	L360	N23-7	W996	N55-1
a	L322	N42-7			L345	N82-3	L361	N23-11	W997	N55-7
b	GRD		GRD		GRD		GRD		GRD	
	(CHAN. 6 CABLE D)		(6M3)		(CHAN. 6 CABLE E)		(CHAN. 6 CABLE F)		(6N3)	

PIN	O1 TERM	O1 JACK	O2 TERM	O2 JACK	O3 TERM	O3 JACK	P1 TERM	P1 JACK
A	L000	K10-3	L023	N41-11	N635	P38-1	L046	N81-7
B	L001	K10-7	L024	K50-3	N637	P49-1	L047	N81-11
C	L002	K10-11	L025	K50-7	N639	P55-7		
D	L003	M10-3	L026	K50-11	N634	P37-1	M049	P14-1
E	L004	M10-7	L027	N51-3	N636	P48-1	M050	P14-5
F	L005	M10-11	L028	N51-7	N636	P55-1		
H	L006	M21-3	L029	N51-11				
J	L007	M21-7	L030	K60-3	K545	P60-8	L062	P15-11
K	L008	M21-11	L031	K60-7			L063	P15-3
L	L009	021-3	L032	K60-11	I103	L10-8	M051	P14-9
M	L010	021-7	L033	N61-3	I104	N10-2		
N	L011	021-11	L034	N61-7	I105	N10-8	L050	L11-3
P	L012	K30-3	L035	N61-11	I106	J21-2	L051	L11-7
R	L013	K30-7	L036	K71-3	I107	J21-8	L052	L11-11
S	L014	K30-11	L037	K71-7	K015	N24-5	L053	011-3
T	L015	N31-3	L038	K71-11	K005	P56-8	L054	011-7
U	L016	N31-7	L039	N72-3	I108	L21-2	L055	011-11
V	L017	N31-11	L040	N72-7	I109	L21-8	L056	K21-3
W	L018	K40-3	L041	N72-11	I110	N21-2	L057	K21-7
X	L019	K40-7	L042	K80-3	I111	N21-8	L058	K21-11
Y	L020	K40-11	L043	K80-7	I112	J30-2	L059	N22-3
Z	L021	N41-3	L044	K80-11	I113	J30-8	L060	N22-7
a	L022	N41-7	L045	N81-3	I114	L30-2	L061	N22-11
b	GRD		GRD		GRD		GRD	
	(CHAN. 7 CABLE D)		(CHAN. 7 CABLE E)		(7N3)		(CHAN. 7 CABLE F)	

NOTE:
CABLE DESTINATIONS ARE SHOWN BELOW THE TABLES ABOVE; e.g., (3G1) INDICATES THAT THE CABLE DESTINATION IS CHASSIS 10300, CONNECTOR G1.

REV. AUTH. DATE REQ. DRW. CHK. APPROVED
REVISIONS

APPROVED -
CHECKED - [signature] 4-5-62
DRAWN - TAW 12-4-62
DESIGNED -

REFERENCE DRAWINGS

COMPONENTS (UNLESS OTHERWISE INDICATED)
TOLERANCE VALUE SIZE
RESISTORS
CAPACITORS

TITLE CABLE CONNECTOR PIN ASSIGNMENTS CHASSIS 10800

CONTROL DATA CORPORATION

PROJECT OR PRODUCT 1604-A

DRAWING NUMBER XDP 214619 G

PAGE 80.8

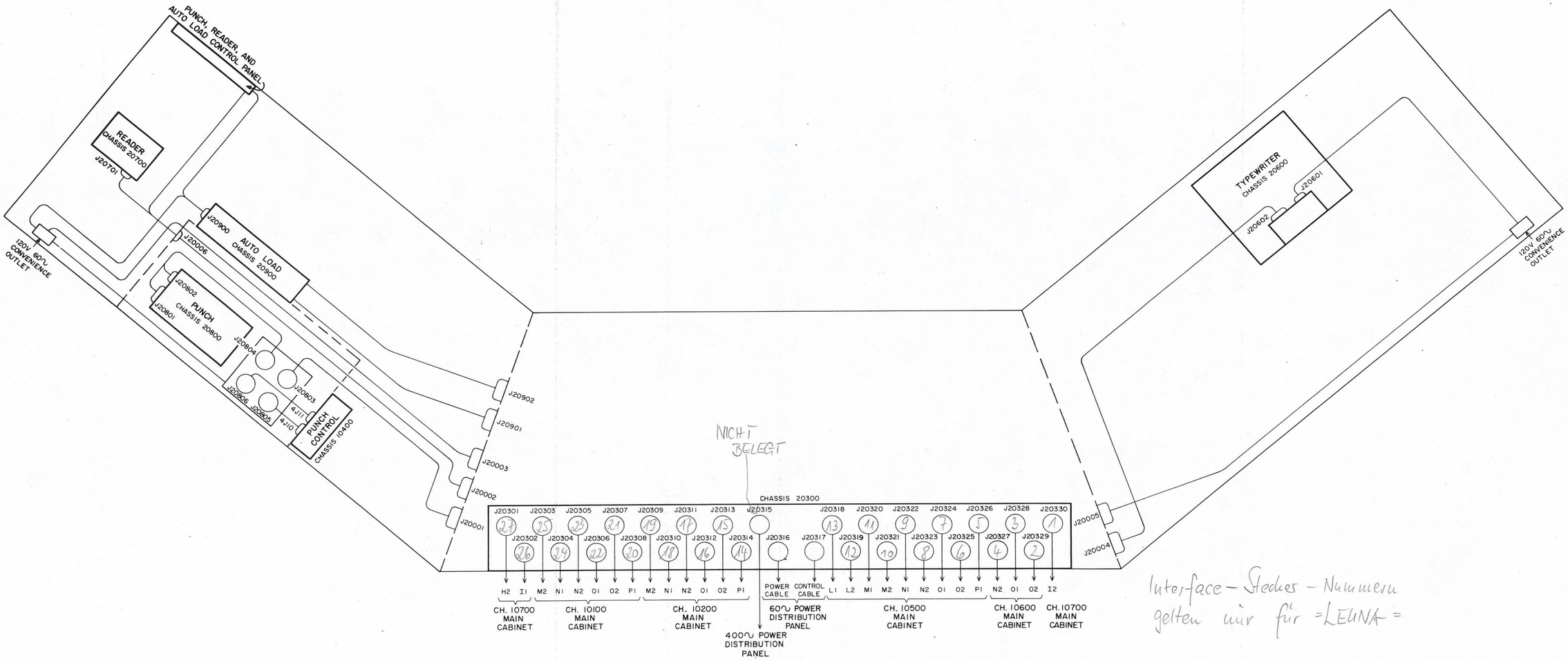

Interface – Stecker – Nummern
gelten nur für =LEUNA=

1604-A

CONSOLE CABLE CONNECTIONS

XDP 214628

CUT ALONG LINE

COMMENT SHEET

CONTROL DATA 1604-A Computer
Customer Engineering Diagrams
Pub. No. 60024300

FROM NAME: _____

BUSINESS ADDRESS: _____

COMMENTS: (DESCRIBE ERRORS, SUGGESTED ADDITION OR DELETION AND INCLUDE PAGE NUMBER, ETC.)

NO POSTAGE STAMP NECESSARY IF MAILED IN U. S. A.

FOLD ON DOTTED LINES AND STAPLE

CUT ALONG LINE

COMMENT SHEET

CONTROL DATA 1604-A Computer
Customer Engineering Diagrams
Pub. No. 60024300

FROM NAME: _____

BUSINESS ADDRESS: _____

COMMENTS: (DESCRIBE ERRORS, SUGGESTED ADDITION OR DELETION AND INCLUDE PAGE NUMBER, ETC.)

NO POSTAGE STAMP NECESSARY IF MAILED IN U. S. A.

FOLD ON DOTTED LINES AND STAPLE

STAPLE STAPLE

FOLD FOLD

FIRST CLASS
PERMIT NO. 8241

MINNEAPOLIS, MINN.

BUSINESS REPLY MAIL
NO POSTAGE STAMP NECESSARY IF MAILED IN U.S.A.

POSTAGE WILL BE PAID BY

CONTROL DATA CORPORATION
8100 34TH AVENUE SOUTH
MINNEAPOLIS 20, MINNESOTA

ATTN: TECHNICAL PUBLICATIONS DEPT.
COMPUTER DIVISION
PLANT TWO

FOLD FOLD

CUT ALONG LINE

STAPLE STAPLE

FOLD FOLD

FIRST CLASS
PERMIT NO. 8241

MINNEAPOLIS, MINN.

BUSINESS REPLY MAIL
NO POSTAGE STAMP NECESSARY IF MAILED IN U.S.A.

POSTAGE WILL BE PAID BY

CONTROL DATA CORPORATION
8100 34TH AVENUE SOUTH
MINNEAPOLIS 20, MINNESOTA

ATTN: TECHNICAL PUBLICATIONS DEPT.
COMPUTER DIVISION
PLANT TWO

FOLD FOLD

CUT ALONG LINE

CONTROL DATA

3/4 — 1-1/2 — 1-1/4

>>> CUT OUT FOR USE AS LOOSE-LEAF BINDER TITLE TAB

CONTROL DATA CORPORATION

DATA PRODUCTS GROUP

4201 NORTH LEXINGTON AVENUE, ST. PAUL, MINNESOTA, 55112

Pub. No. 60024300

LITHO IN U.S.A.